17.

STRÁNSKÝ A PETRŽÍK

CATALOGUE OF PNEUMATIC COMPONENTS

ČSJ CERTIFIED ISO 9001

A Tradition Since 1991

sappv.cz

About Our Company

Discover Our Other Products and Services:

Sales and Service of CNC Machine Tools

Steam Boiling Chambers

Design and Manufacturing of Special-Purpose Machines

Industrial Scales and Weighing Solutions

CONTENTS

Technical information i

Pneumatic cylinders 1

Pneumatic action and clamping elements 2

Proximity switches 3

Cylinder mounting accessories 4

Solenoid actuated valves 5

Mechanically and pneumatically actuated valves 6

Flow control valves 7

Air preparation 8

Shock absorbers and hydraulic speed controls 9

Fittings, tubes, silencers and other accessories 10

Electric actuators 11

Index R

Obj.kód	strana
1010100...	1-4
1210100...	1-16
2101010...	4-2

i

Double acting cylinders

according to standards ISO 15552, DIN ISO 6431, VDMA 24562, CNOMO 06.07.02, DIN ISO 6432 and others

from page 1-2

- piston diameters from 8 mm to 400 mm
- adjustable cushioning in end positions
- magnetic piston, double-ended piston rod
- with brake, locking in end positions
- linear guide U or H, double piston rod
- compact cylinders, short stroke,
- rotary cylinders
- rodless, classical and magnetically driven
- temperature resistant up to +180°C
- various material versions - light metals, steel, cast iron, stainless steel
- cylinders for explosive environments according to Directive 2014/34/EU:
  - Ex I M2 Ex h I Mb,
  - Ex II -/2 G Ex h IIC T6 -/Gb,
  - Ex II -/2 D Ex h IIIC T85°C -/Db

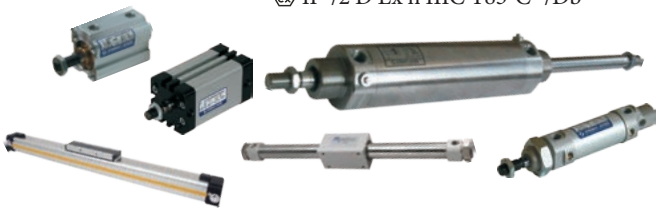

Double acting cylinders

with non-rotating rod

from page 1-44

- piston diameters from 12 mm to 200 mm
- magnetic piston
- hexagonal piston rod or two connected piston rods

Double acting cylinders

with integrated guidance

from page 1-54

- piston diameters from 6 mm to 80 mm
- magnetic piston
- double-ended piston rod
- integrated hydraulic shock absorbers

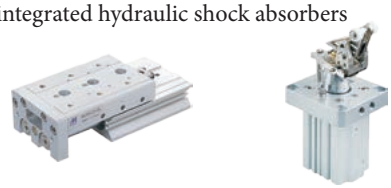

Single acting cylinders

from page 1-66

- piston diameters from 6 mm to 160 mm
- magnetic piston

Swing actuators

page 1-36
page 1-76

- single-acting and double-acting
- for valves
- piston diameters from 52 mm to 400 mm

Cylinders

for special purposes and according to customer requirements

page 1-81

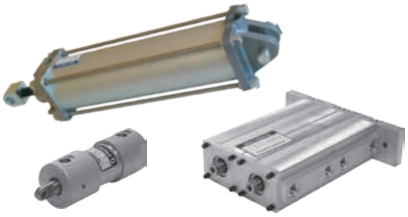

- piston diameters from 8 mm to 600 mm
- various shapes and materials

Shake devices

from page 2-2

- vibrators
- knockers
- air guns

Clamp cylinders and grippers

from page 2-14

- piston diameters from 12 mm to 125 mm
- swing-linear, linear clamps
- angular, parallel and three-point grippers

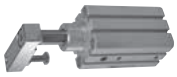

Cylinders

hydro-pneumatic and boosters

from page 2-21

- various designs
- wide range of amplification ratios

Cylinder‘s accessories

from page 3-2 a 4-2

- mounting accessories
- position sensors
- dust covers

Actuators

from page 1-82

- single-acting linear with a force of up to 65 kN
- double-acting linear with a force of up to 240 kN
- rotary single-acting with a torque of up to 10,000 Nm
- rotary single-acting with a torque of up to 50,000 Nm
- for pipeline dampers and valves

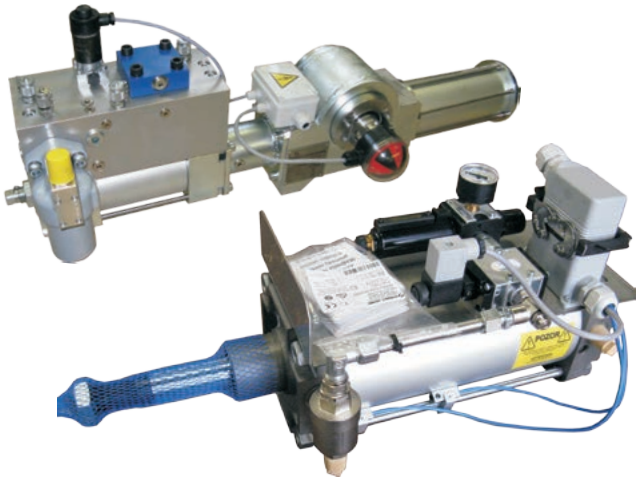

Valves
electromagnetically operated

from page 5-3

- wide range of valves
- with spool&sleeve assembly or with classic sealing elements
- individual and group mounting
- various types of electronic control including BUS systems

Valves
mechanically and pneumatically operated

from page 6-2

- manual, foot, mechanical and pneumatic control
- interchangeable actuators
- panel mountable

Valves

from page 7-2

- flow-control, one-way valves
- quick exhaust valves
- logical gates
- slide and ball shut-off valves
- indicators and other valves with specific function

Compressed air treatment elements

from page 8-2

- modular system
- many types of elements with specific functions
- standard and heavy-duty versions
- stainless steel elements

Hydraulic shock absorbers and seed control

from page 9-3

- adjustable and self -compensating shock absorbers
- adjustable brakes

Accessories

from page 10-2

- push-in and push-on fittings
- fittings accessories (reducers, sockets, nipples, etc.)
- tubes made of various materials
- silencers
- other elements for pneumatic circuits

Compressed air distribution

from page 10-17

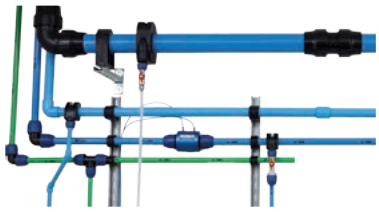

- modular system
- aluminum or plastic connectors
- aluminum pipes with diameters from 16 to 110 mm

Electric drives

from page 11-2

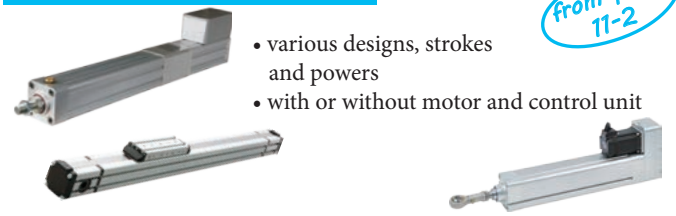

- various designs, strokes and powers
- with or without motor and control unit

STRÁNSKÝ A PETRŽÍK

i

The VDMA cylinder range has been expanded with a type with a plastic endcaps page 1-6

The CNOMO cylinder range and compact cylinders have been expanded with a diameter of 25 mm page 1-16

A new line of DIN ISO 6432 stainless steel cylinder series MCMIS page 1-24

Swing actuators page 1-36 page 1-76

A new line of rodless cylinders, the OSP-P series page 1-38

A new line of telescopic cylinders page 1-42

A new cylinder series with non-rotating piston rod from page 1-44

A new single acting cylinder series MCMJP page 1-74

The air guns have been expanded with a type of 50l. page 2-10

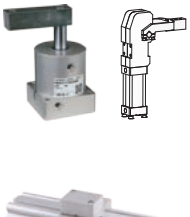

Swing linear clamps page 2-14 and power clamps page 2-17

MCKC clamp series has been expanded by a diameter of 50 mm from page 2-16

New BS multiplier series and MVBA series expanded by new types from page 2-23

Electromagnetic valves with spool&sleeve assembly series K NAMUR page 5-6

Electromagnetic valves with spool&sleeve assembly series KI ISO 5599/1 KOMPAKT size 1 and 2 page 5-16

LV7 stem and roller lever valves page 6-14 page 6-17

Pneumatically operated valves series K and MVAA expanded by size G1/2“ from page 6-18

Pneumatically operated reversing valve page 6-24

MAIR precision pressure reducing valve series expanded by type MAIR300 page 8-5

Fine filters series MAF302, MAF501 and MJF from page 8-14

Electronic pressure reducing valves expanded by series MAER300 page 8-20

Antistatic hoses page 10-13

Electrical linear actuators with ball screw series 1E1, ISO15552 page 11-2

There is no question, that the internet is an important communication tool nowadays. To make your access to our latest information easier, you can always find our up to date catalogue and many other informations at the address

https://www.sappv.cz

On this address, you can find our complete offer not only of pneumatic components, but also other spheres which we deal with - machine tools, food-processing industry and single-purpose machines and equipment.

In the section, the pneumatic components, you can easily use our ordering system. Each component can be put into the basket directly from the catalogue, which significantly simplifies your job and makes it easier.

Connect with us also on our social networks:

Facebook

Instagram

LinkedIn

YouTube

3D models for your CAD system

... may be simply generated any time at our web site!

1. choose the product from our internet catalogue:

2. enter 3D model parameters and e-mail address:

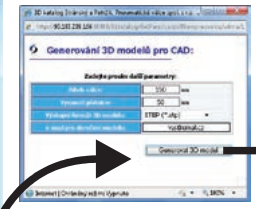

3. after recieving the email, save the enclosed model

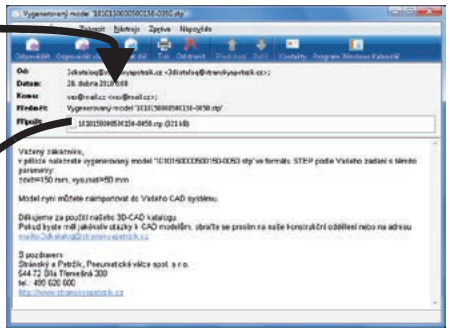

4. import model into your CAD system

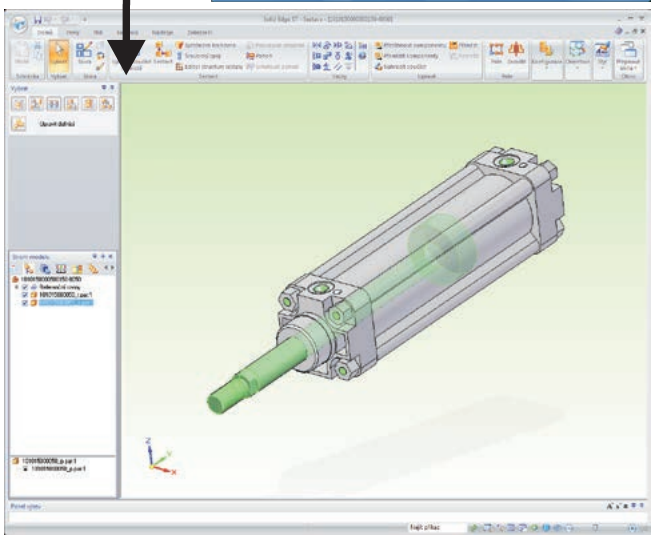

For more information about generating 3D models, please visit our website at **https://www.sappv.cz/r/ei1**

STRÁNSKÝ A PETRŽÍK

If you are designing pneumatic, electric, or hydraulic schematic layouts or their combination, you will surely appreciate our new software in our offer. It is software AUTOMSIM PREMIUM designed by Irai France for creation and simulation of schematic layouts.

ORDER CODES

standard license … 2899 0099 9000 0001
license package for schools, universities and professional educa tional institutions, accredited by Czech Ministry of Education (contains 10+1 licenses) … 2899 0099 9000 0002

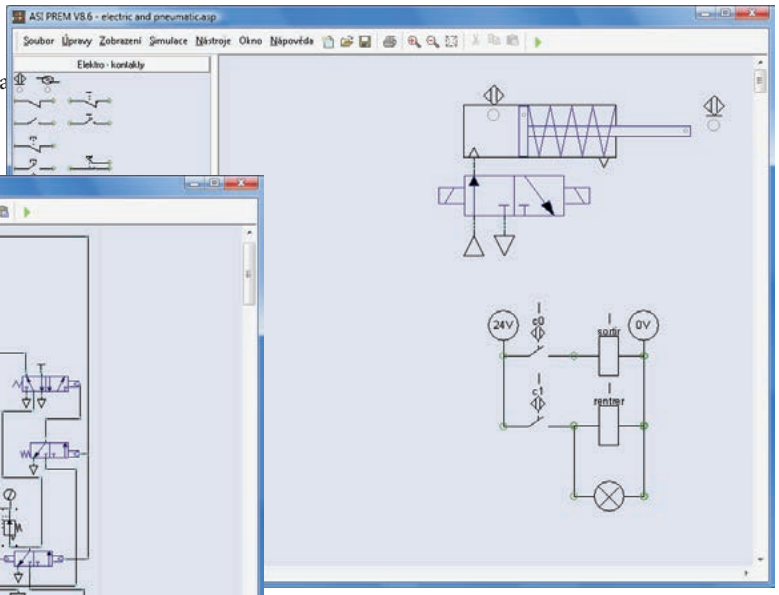

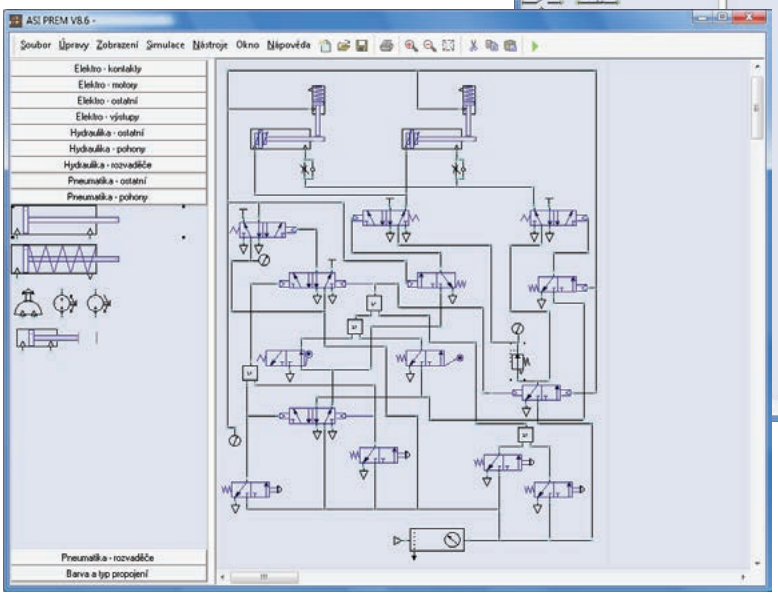

Examples of schematic layouts

Using the symbol library, you can simply insert the right symbol, which is necessary in your layout. If there is no specific symbol in the library, it can be easily modified from similar symbol by changing the properties. Pneumatic cylinders can be linked to proximity switches or roller lever valves, proximity switches to relays, relays to valve coils, etc. So it isn't just drawing of layouts, but a circuit, which you can simply build and simulate it during operation and check, if the function conforms the submission. Of course, the pressure level as well as percentage of adjustment of the speed control and many other properties can be set and changed during simulation. It is also possible to display graph with various values.
You can also create the layout of your current circuit, which you are having problems with and check, where the critical points are. Layouts can be printed and exported into EMF file format, which is a standard format that can be imported into any office software. If you fill in fields like designation, supplier, description and other during inserting the symbols into the layout, the automatic creating of bill of material is available.

Example of graph

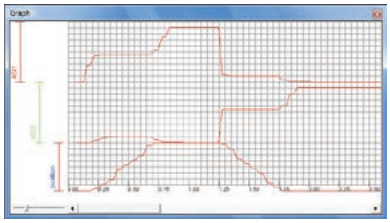

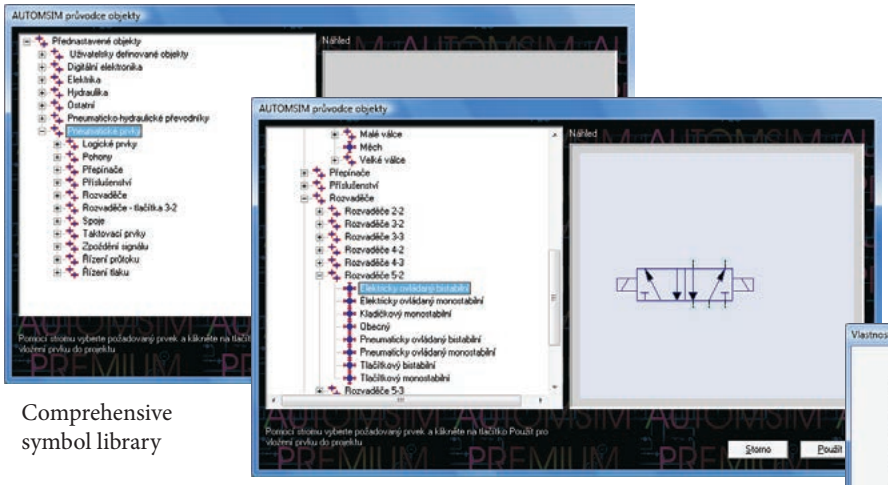

Comprehensive symbol library

Features of inserted symbol

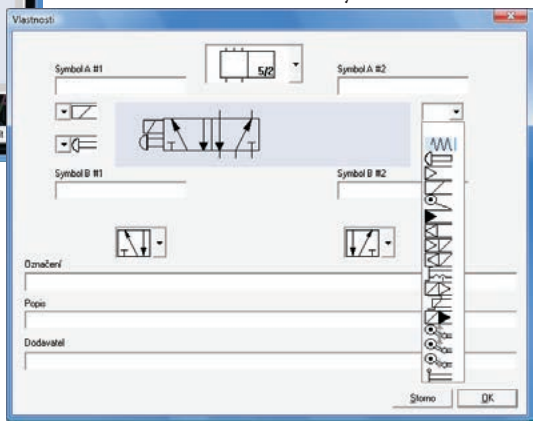

AUTOMSIM PREMIUM is excellent for creating layouts and their functional simulations not only for its simplicity, but also for its price!
The full functional demo is available. Please contact us about the possibility of delivery.

General conditions for pneumatic circuits

- it is necessary to follow the appropriate safety rules, instructions, recommendations and specified parameters (temperature, pressure etc.), when setting products into operation
- areas, which are pressurized even after closing of the main air supply, should be specially marked in the pneumatic circuits
- it is necessary to take into account the failure of the product, or emergance of dangerous situations due to wrong operation, age or failure
- we recommend to mark with a special sign the whole pneumatic circuits, where the high caution during service is necessary
- we do not recommend to weld by electric arc on machinery, where pneumatic cylinders are mounted
- end users must take sufficient preventive steps to prevent injuries on material and health of employees

Conditions of use and operation of pneumatic cylinders

- disassembly of single-acting cylinders must be done very cautiously, because the inside spring is mounted with a preload
- working medium is modified compressed air
- we recommend to use our pneumatic oil for air lubrication, or some oil listed on the recommended oil list, to renew lifetime grease, use grease SAP-FML2A (order code 2995 1004 0000 0000)
- using other than recommended oils leads to the damage of O-rings and sealing built-in not only into cylinders, but also in other components used in the pneumatic circuit
- if the speed of piston rod extension is lower than 1 ms^{-1}, the compressed air needn't be lubricated; if the speed is higher, we recommend to lubricate air using a lubricator and pneumatic oil (see above); we also recommend to lubricate air, when the dew point of compressed air is lower than -20°C
- we offer special surface treatment, material change (stainless steel) or use of dust covers on our cylinders for environments with hard conditions and aggressive surroundings
- other special designs, material or sealing changes, etc. are possible after consultation with our technical dept.
- it is necessary to follow the correct mounting of cylinders and correct guiding of the piston rod to avoid radial forces (except for versions which are specifically designed to capture radial forces such as guide unit H)
- we recommend to use hydraulic shock absorbers, when heavy mass and high piston rod speed may occur - the machinery lifetime will be significantly extended

Stroke tolerance of pneumatic cylinders

Stroke of a cylinder may have positive tolerance accordingly to DIN ISO 6431, DIN ISO 6432 and VDMA 24562. The amount of tolerance is given by manufacturing tolerances and it depends on diameter and stroke as follows:

Standard	Piston diameter [mm]	Stroke [mm]	Allowable tolerance [mm]
DIN ISO 6432	8, 10, 12, 16, 20, 25	0 to 500	+1.5
DIN ISO 6431 VDMA 24562 NF E 49003.1	32, 40, 50	0 to 500	+2.0
		501 to 1250*	+3.2**
	63, 80, 100	0 to 500	+2.5
		501 to 1250*	+4.0**
	125, 160, 200, 250, 320	0 to 500	+4.0
		501 to 1250*	+5.0**

*) For strokes bigger than 1250 mm, the tolerance depends on an agreement between the producer and the customer
**) This value is not listed in standard VDMA 24562, or NF E 49003.1 and it is valid only for standard DIN ISO 6431

For large strokes, it is necessary to check, that the piston rod will not fail

Critical strength of piston rod (buckling length)

by buckling, even if the cylinder would withstand the load according to its diameter. Quick check can be done by reading the graph below:

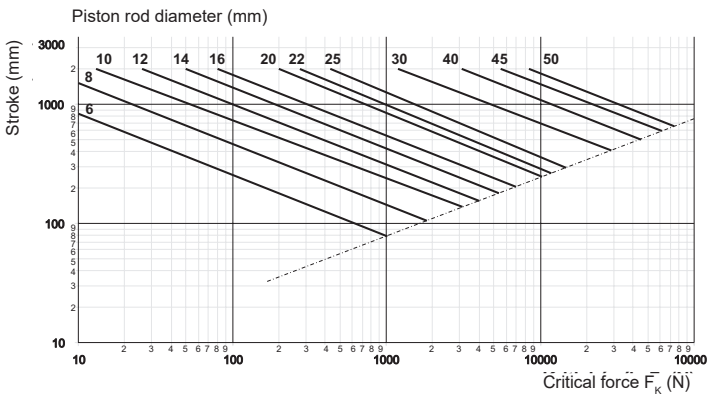

For exact calculation of the critical force, use the following formula (F_K must be higher than load to prevent piston rod damage):
Where: F_K is critical force on piston rod [N]

$$F_K = \frac{\pi^2 \times E \times J}{l^2 \times k}$$

E is stress modulus $2.1 \cdot 10^5$ MPa
J is quadratic moment of cross section [mm^4]
l is critical length (=twice the stroke) [mm]
k is safety coefficient (in practice about 4)

i

Conditions of use and operation of pneumatic valves

- it is necessary to keep in mind, that the valve spool can be in an undefined position before first activation and that uncontrolled movements can occur
- when 5/3 valves or non-return valves are used, it is necessary to keep in mind that some parts of the circuit can always be pressurized - high caution during service is necessary
- it is necessary to follow listed technical data, especially pressure, air purity and solenoids voltage
- exhaust ports on valves should be equipped with silencers to prevent intrusion of junk into the valve
- valves can work on either lubricated or non-lubricated air (for more information, see chapter Modified compressed air)

Short form port designations:

Port	Designation to ISO 5599	Designation to DIN*	Designation to ANSI*
Supply port	1	P	P
Working line	2	A	B
Exhaust line	3	R	EB
Working line	4	B	A
Exhaust line	5	S	EA
Pilot line	12	Z	CA
Pilot line	14	Y	CB

*) Designation by letters shouldn't be used anymore.

Protecting contacts when electromagnetic coils are used

Electromagnetic coil is a coil, which opposes any voltage change. It is thus possible, that a voltage spike or electrical ark will occur when voltage is switched on or off. This can then lead to damage to the isolation or to contacts burning. There are at least four ways to eliminate this danger:

- for serial connection of RC circuit, it is necessary to calculate values of resistance and capacity for each application separately
- for DC voltage, a diode can be used, it is necessary to calculate the value of the diode for each application
- Zener diode can be used for both AC and DC voltage, it is necessary to calculate the size of the diode for each application
- varistor can be used for AC and DC voltage and it is commonly built into a connector of a valve (see connectors for valves)

Distribution of compressed air

The operational reliability and service life of a pneumatic system depend, to a large extent, on the preparation of compressed air. Impurities in the compressed air such as scale, rust and dust as well as the liquid constituents in the air, which deposit as condensate can cause a great deal of damage in pneumatic systems. These contaminants accelerate wear on sliding surfaces and sealing elements, adversely affecting the functionality and service life of the pneumatic components. Pressure fluctuations occur as a result of switching the compressor on and off, these have an unfavourable effect on the functioning of the system. In order to eliminate these effects, compressed air service units must be installed in every pneumatic system.

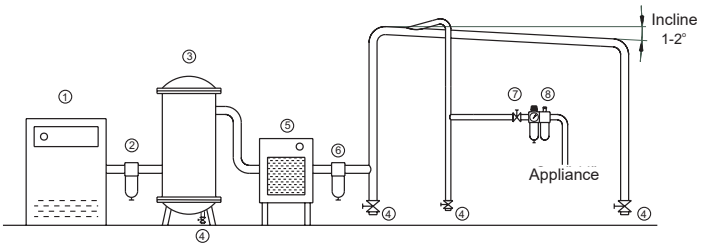

Legend:
1) compressor
2) coarse filter
3) pressure vessel
4) condensate drain
5) air dryer
6) filter
7) shut off valve
8) standard FRL unit

Example of air distribution:
Compressed air goes from a compressor through a coarse filter to an a pressure vessel. Then the air is led into an air dryer and another filter, which should catch junk, collected in the pressure vessel and air dryer. The air dryer is used only in substantiated cases. Then distribution in plastic or metal tubes follows, the tubes should be inclined by 1-2° to allow drainage of possible condensed water. Individual branches to appliances should come out of the main distribution diagonally upwards. If there are intense pressure shocks during compressed air consumption, it is useful to use another smaller pressure vessel between the main distribution and appliance. This vessel should balance the pressure shocks. Finally, the standard FRL unit or only some of its modules is connected.

Modified compressed air

Modified compressed air = filtered air without solid particles and liquids, optionally lubricated.
All our produced pneumatic items are greased with special grease, so it isn't necessary to lubricate air under standard conditions. However, we recommend to regularly check the lifetime grease level and if you observe a decline, renew the grease filling. Careful, these items cannot be exposed to air polluted by water or oil, because the lifetime grease level would be flushed out. If that happens, the air has to be lubricated, or the lifetime grease filling must be renewed. Special grease for lifetime filling is available, please see chapter Air preparation or contact our sales dept. If the pneumatic circuit is stressed and heavy duty, we recommend to lubricate air to increase the lifetime of the pneumatic items.

The operational reliability and service life of pneumatic systems depend among others on the quality of incoming compressed air.
Junk and moisture contained in the air increase surface wear of parts and sealing, which decreases economy and lifetime of the pneumatic items. Air preparation thus consists of liquid removal (mainly water and oil), suitably dimensioned filtration of solid junk and appropriate air lubrication.

Air must be so clean after the modification as to not cause any damage to the pneumatic system and sequentially damage to machinery. Using a filter reduces the maximum flow capacity since it builds up resistance that obscures air flow. Filter should have a filter element, that produces air of sufficient quality but keeps in mind economy of the system. If high quality of compressed air is required, the air should be filtered in several steps. If we only use a fine filter that ensures the requested air quality, we have to expect a serious decrease in its lifetime.
The compressed air quality is expressed by quality classes, that are described in ISO 8573-1 standard as well as the acceptable values of junk.

Quality classes according to ISO 8573-1

Class	Solid junk			Max. pressure dew point [°C]	Max. oil concentration [mg/m³]
	Particle size 0,1 to 0,5 [µm]	Particle size 0,5 to 1,0 [µm]	Particle size 1,0 to 5,0 [µm]		
1	≤ 20 000	≤ 400	≤ 10	-70	0.01
2	≤ 400 000	≤ 6 000	≤ 100	-40	0.1
3	unstipulated	≤ 90 000	≤ 1 000	-20	1
4	unstipulated	unstipulated	≤ 10 000	+3	5
5	unstipulated	unstipulated	≤ 100 000	+7	> 5

Recommended way of using the quality classes

Area	Solid junk		Water		Oil	
	Max. class	Max. particle size [µm]	Max. class	Max. dew point [°C]	Max. class	Max. concentration [mg/m³]
Pneumatic cylinders	5	40	4	+3	4	5
Pneumatic valves	3 to 5	5 to 40	4	+3	4	5
Fine regulators	3	5	4	+3	3	1
Measuring equipment	2	1	4	+3	3	1
Other industry	5	40	3 to 7	-20 to +10 and more	3 to 5	1 to 25

Mounting, operation and service of air preparation units

It is necessary to pay attention to the direction of flow, which is marked by arrows or labeled IN/OUT, when mounting the units. The following sequence of units should be adhered to: shut off valve, particulate filter, coalescing filter, regulator, lubricator. Bowls of the individual units must always point vertically downwards. Lubricator should be as close to the appliance as possible (max. 5 to 10 m).

Condensated water level in the bowl mustn't exceed level of bottom of filter element or mark on a bowl. For drain, there is connection for tube on the bottom of bowl. Automatic drain doesn't practically need service, but if semi-automatic drain is used, it is necessary to regularly check level of condensed water in bowl and expel it always if level of water achieve filter element or mar on the bowl. Semi-automatic drain automatically expels water if the primary pressure drop under 0.05 MPa. If it is necessary to expel water immediately, there are 2 systems: one has got button - pressing the button the water is removed. The second system is without button - for removing the water simply push the tube connection towards to the bowl. If the filter element is polluted, it must be changed. Before disassembling shut off air supply and depressurize the filter, remove bowl (release safety lock on side of bowl or push the bowl towards to the unit, turn it off 45° and pull it out). Then unscrew the baffle and remove filter element. Procedure at assembling is the same, but in reverse order.

If lubricator is used, it is necessary to keep sufficient level of oil. Oil refilling is possible when air supply is shut off directly into bowl, or by button head fill nut. Before disassembling shut off air supply and depressurize the lubricator, remove bowl (release safety lock on side of bowl or push the bowl towards to the unit, turn it off 45° and pull it out). Fill in bowl (see level mark on the bowl) and mount bowl back. Procedure at assembling is the same, but in reverse order. It is necessary to use only recommended oils.

Some bowls are made from polycarbonate and could be cleaned only with household soap and water. Do not use any solvent (alcohol), bowls may crackle.

Recommended oils for compressed air lubricating

Primarily we recommend to use our pneumatic oil with order code 2995 0101 0000 0000, which composition was specially designed for this purpose. It is oil, which is foamless, nonaggressive to gaskets and has suitable mechanical characteristics (viscosity etc.).

In case of need, the following oils could be used too:

Supplier	Designation
Stránský a Petržík	**Pneumatic oil, order code 2995 0101 0000 0000**
Shell	Tellus Ol 10
Mobil Oil	Velocite Oil No. 6
BP	Energol HLP10
Esso	Spinesso 10, Nutto H5, H10
Aral	Vitamol GF10, DE 10, Sumorol CM5, CM10

Supplier	Designation
Fuchs	Renolin MR1, MR3
Optimol	Ultra 10
Agip	OSO10
Elf	Spinelf 5, 10
Total	Azolla 10
Fina	Cirkan 10

i

Compressed air consumption

Calculation of air consumption for pneumatic cylinder:

$$Q = Z \times (qp + qz) \times n \times 0{,}1$$

where
Q is air consumption [l/min]
Z is stroke [mm]
qp is air consumption for 10 mm of stroke when thrust [l]
qz is air consumption for 10 mm of stroke when retract [l]
n is number of complete strokes (thrust+retract) in a minute

Table of air consumption sp / sz [l] for 10 mm of stroke:

Piston diameter	Piston area		Working pressure [MPa]									
mm	mm²		0.1	0.2	0.3	0.4	0.5	0.6	0.7	0.8	0.9	1.0
8	50	qp	0.0010	0.0015	0.0020	0.0025	0.0030	0.0035	0.0040	0.0045	0.0050	0.0055
	38	qz	0.0007	0.0011	0.0015	0.0019	0.0023	0.0026	0.0030	0.0034	0.0038	0.0041
10	79	qp	0.0015	0.0024	0.0031	0.0039	0.0047	0.0055	0.0063	0.0071	0.0079	0.0086
	66	qz	0.0013	0.0020	0.0026	0.0033	0.0040	0.0046	0.0053	0.0059	0.0066	0.0073
12	113	qp	0.0023	0.0034	0.0045	0.0056	0.0067	0.0078	0.0089	0.01	0.0111	0.0123
	90	qz	0.0018	0.0027	0.0036	0.0045	0.0054	0.0063	0.0072	0.0081	0.009	0.0099
16	200	qp	0.004	0.006	0.008	0.01	0.012	0.014	0.016	0.018	0.02	0.022
	170	qz	0.0034	0.0051	0.0068	0.0085	0.012	0.0119	0.0136	0.0153	0.017	0.0187
20	314	qp	0.0063	0.0094	0.0126	0.0157	0.0188	0.022	0.0251	0.0283	0.0314	0.0345
	260	qz	0.0052	0.0078	0.0104	0.013	0.0156	0.0182	0.0208	0.0234	0.026	0.0288
25	491	qp	0.0098	0.0147	0.0196	0.0245	0.0295	0.0344	0.0393	0.0442	0.0491	0.054
	410	qz	0.0082	0.0123	0.0164	0.0205	0.0246	0.0287	0.0328	0.0369	0.041	0.0451
32	804	qp	0.016	0.024	0.032	0.04	0.048	0.056	0.064	0.072	0.08	0.088
	691	qz	0.014	0.021	0.028	0.035	0.042	0.049	0.056	0.063	0.07	0.076
40	1256	qp	0.025	0.038	0.05	0.063	0.076	0.088	0.1	0.113	0.126	0.138
	1002	qz	0.02	0.03	0.04	0.05	0.06	0.07	0.08	0.09	0.1	0.11
50	1963	qp	0.039	0.059	0.079	0.089	0.118	0.137	0.157	0.177	0.196	0.216
	1708	qz	0.034	0.051	0.068	0.085	0.102	0.12	0.137	0.154	0.17	0.188
63	3116	qp	0.062	0.093	0.125	0.156	0.187	0.218	0.249	0.28	0.312	0.343
	2726	qz	0.055	0.072	0.109	0.136	0.164	0.191	0.218	0.245	0.273	0.3
80	5024	qp	0.1	0.15	0.2	0.25	0.301	0.351	0.402	0.452	0.502	0.552
	4644	qz	0.093	0.139	0.186	0.232	0.279	0.325	0.372	0.418	0.464	0.51
100	7850	qp	0.157	0.236	0.314	0.382	0.471	0.549	0.628	0.706	0.785	0.862
	7144	qz	0.143	0.214	0.286	0.357	0.429	0.5	0.571	0.643	0.714	0.786
125	12266	qp	0.245	0.368	0.49	0.613	0.736	0.859	0.981	1.104	1.226	1.349
	11559	qz	0.231	0.347	0.462	0.578	0.694	0.809	0.925	1.04	1.156	1.272
160	20096	qp	0.402	0.603	0.804	1.005	1.206	1.407	1.608	1.809	2.01	2.211
	18840	qz	0.377	0.565	0.754	0.942	1.13	1.319	1.507	1.696	1.884	2.072
200	31400	qp	0.628	0.942	1.256	1.57	1.884	2.198	2.512	2.826	3.14	3.454
	30144	qz	0.603	0.904	1.206	1.507	1.808	2.11	2.412	2.713	3.014	3.316
250	49063	qp	0.981	1.473	1.964	2.455	2.946	3.437	3.928	4.419	4.91	5.401
	47100	qz	0.942	1.413	1.884	2.355	2.826	3.297	3.768	4.239	4.71	5.181
320	80425	qp	1.609	2.413	3.217	4.021	4.826	5.630	6.434	7.238	8.042	8.847
	77308	qz	1.546	2.319	3.092	3.865	4.639	4.412	6.185	6.958	7.731	8.504

Corresponding compressed air flow rates [l/min] as a function of pressure:

Pressure [MPa]	Port size					
	G1/8“	G1/4“	G3/8“	G1/2“	G3/4“	G1“
	Hose size at the length app. 2 to 2.5 m					
	Js 5	Js 6	Js 8	Js 11	Js 14	Js 18
0.2	126	227	357	797	1416	2213
0.4	212	377	593	1328	2361	3689
0.6	297	529	826	1860	3306	5163
0.8	382	680	1062	2391	4250	6640
1.0	468	830	1299	2923	5194	8115

Values of flow rate are applied at standard conditions at 20˚C and absolute pressure 0.1 MPa.

Action force

Calculation of force on piston rod of pneumatic cylinder:

$$F = (Sp \text{ (or } Sz) \times p) - T$$

where F is force on piston rod of pneumatic cylinder [N]
Sp is piston area at thrust [mm^2]
Sz is piston area at retract [mm^2]
p is working pressure [MPa]
T is friction force (about 10% in practice)

Table of retract force on piston rod of pneumatic cylinder [N]

Piston diameter [mm]	Working pressure [MPa]											
	0.1	0.2	0.3	0.4	0.5	0.6	0.7	0.8	0.9	1	1.1	1.2
8	4.5	9.0	13.6	18.1	22.6	27.1	31.7	36.2	40.7	45.2	49.8	54.3
10	7.1	14.1	21.2	28.3	35.3	42.4	49.5	56.5	63.6	70.7	77.8	84.8
12	10.2	20.4	30.5	40.7	50.9	61.1	71.2	81.4	91.6	102	112	122
16	18.1	36.2	54.3	72.4	90.5	109	127	145	163	181	199	217
20	28.3	56.5	84.8	113	141	170	198	226	254	283	311	339
25	44.2	88.4	133	177	221	265	309	353	398	442	486	530
32	72.4	145	217	290	362	434	507	579	651	724	796	869
40	113	226	339	452	565	679	792	905	1018	1131	1244	1357
50	177	353	530	707	884	1060	1237	1414	1590	1767	1944	2121
63	281	561	842	1122	1403	1683	1964	2244	2525	2805	3086	3367
80	452	905	1357	1810	2262	2714	3167	3619	4071	4524	4976	5429
100	707	1414	2121	2827	3534	4241	4948	5655	6362	7068	7775	8482
125	1104	2209	3313	4418	5522	6627	7731	8835	9940	11044	12149	13253
160	1810	3619	5429	7238	9048	10857	12667	14476	16286	18095	19905	21714
200	2827	5655	8482	11309	14137	16964	19791	22619	25446	28274	31101	33928
250	4418	8835	13253	17671	22089	26506	30924	35342	39760	44177	48595	53013
320	7238	14476	21714	28952	36190	43428	50666	57904	65142	72380	79618	86856

Hydraulic shock absorber selection

Five basic criteria are required for sizing the shock absorbers:
a) impacting mass m (kg)
b) impact speed v (m/s)
c) additional external forces acting on the mass e.g. propelling force F (N)
d) number of strokes of the shock absorber per hour X (1/h)
e) number of parallel shock absorbers

Free falling mass

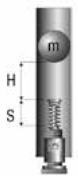

1. $W_k = m \cdot g \cdot H$
2. $W_A = m \cdot g \cdot S$
3. $W_{kg} = W_k + W_A$
4. $W_{kg/h} = W_{kg} \cdot X$
5. $m_e = \frac{2 \cdot W_{kg}}{v_e^2}$
6. $v = v_e = \sqrt{2 \cdot g \cdot H}$

Mass without propelling force

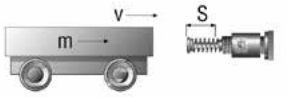

1. $W_{kg} = \frac{m \cdot v^2}{2}$
2. $W_{kg/h} = W_{kg} \cdot X$
3. $v = v_e$
4. $m_e = \frac{2 \cdot W_{kg}}{v_e^2}$

Mass with propelling force, horizontal

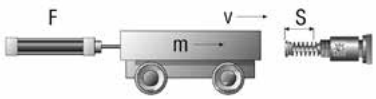

Movement downward: $W_A = (F + m \cdot g) \cdot S$
Movement upward: $W_A = (F - m \cdot g) \cdot S$

1. $v_e = \frac{v}{K1}$
2. $W_k = \frac{m \cdot v_e^2}{2}$
3. $W_A = F \cdot S$
4. $W_{kg} = W_k + W_A$
5. $W_{kg/h} = W_{kg} \cdot X$
6. $m_e = \frac{2 \cdot W_{kg}}{v_e^2}$

Swinging mass without propelling force

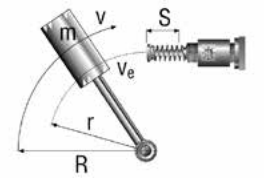

1. $W_k = \frac{m \cdot v^2}{2} = \frac{J \cdot \omega^2}{2}$
2. $W_A = \frac{M \cdot S}{r}$
3. $W_{kg} = W_k + W_A$
4. $W_{kg/h} = W_{kg} \cdot X$
5. $v_e = r \cdot \omega = \frac{v \cdot r}{R}$
6. $m_e = \frac{2 \cdot W_{kg}}{v_e^2}$

Mass on driven rollers

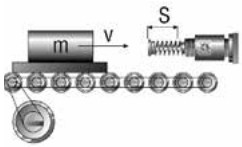

1. $W_k = \frac{m \cdot v^2}{2}$
2. $W_A = m \cdot g \cdot S \cdot \mu$
3. $W_{kg} = W_k + W_A$
4. $W_{kg/h} = W_{kg} \cdot X$
5. $v = v_e$
6. $m_e = \frac{2 \cdot W_{kg}}{v_e^2}$

Mass on incline

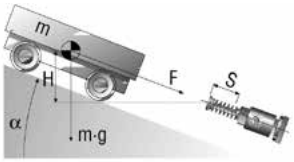

1. $W_k = m \cdot g \cdot H$
2. $W_A = m \cdot g \cdot \sin \alpha \cdot S$
3. $W_{kg} = W_k + W_A$
4. $W_{kg/h} = W_{kg} \cdot X$
5. $v = v_e = \sqrt{2 \cdot g \cdot H}$
6. $m_e = \frac{2 \cdot W_{kg}}{v_e^2}$

Rotary table with propelling force

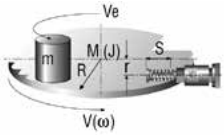

1. $W_k = \frac{m \cdot v^2}{2} = \frac{J \cdot \omega^2}{2}$
2. $W_A = \frac{M \cdot S}{r}$
3. $W_{kg} = W_k + W_A$
4. $W_{kg/h} = W_{kg} \cdot X$
5. $v_e = r \cdot \omega = \frac{v \cdot r}{R}$
6. $m_e = \frac{2 \cdot W_{kg}}{v_e^2}$

Swinging mass with propelling force

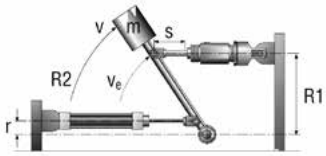

1. $W_k = \frac{m \cdot v^2}{2}$
2. $W_A = \frac{M \cdot S}{R1} = \frac{F \cdot r \cdot S}{R1}$
3. $W_{kg} = W_k + W_A$
4. $W_{kg/h} = W_{kg} \cdot X$
5. $v_e = R1 \cdot \omega = \frac{v \cdot R1}{R2}$
6. $m_e = \frac{2 \cdot W_{kg}}{v_e^2}$

Formulae

Effective mass

$$m_e = \frac{2 \cdot W_{kg}}{v_e^2}$$

Counter force

$$F_G = \frac{W_{kg} \cdot 1.2^*}{S}$$

Deceleration time

$$t = \frac{2 \cdot S}{v_e} \cdot 1.2^*$$

Deceleration time

$$a = \frac{v^2}{2 \cdot S} \cdot 1.2^*$$

Stroke

$$S = \frac{v^2}{2 \cdot a} \cdot 1.2^*$$

*) Calculation for optimum setting. Allow a safety margin!

Used values and variables

W_k	[Nm]	kinetic energy	K_1	[1]	correction factor for pneumatic drive force (K_1=0.65)
W_A	[Nm]	propelling force energy			
W_{kg}	[Nm]	total energy	M	[Nm]	torque
$W_{kg/h}$	[Nm·h^{-1}]	total energy per hour	R, r	[m]	radius
m	[kg]	mass	H	[m]	height
m_e	[kg]	effective mass	g	[m·s^{-2}]	acceleration due to gravity
v	[m·s^{-1}]	impact speed	J	[kg·m^2]	moment of inertia
v_e	[m·s^{-1}]	effective speed	ω	[s^{-1}]	angular velocity
X	[h^{-1}]	number of strokes per hour	μ	[1]	coefficient of friction (steel=0.2)
S	[m]	stroke			
F	[N]	propelling force	a	[°]	angle
F_p	[N]	pneumatic drive force	a	[m·s^{-2}]	acceleration / deceleration
			t	[s]	deceleration time
			F_G	[N]	counter force

Selection of pneumatic cylinder options

Pneumatic cylinders can also be manufactured with material, shape and dimensional options from standard types. This makes it possible, for example, to simply change the piston rod material, temperature resistance, etc. For each cylinder type, the order codes indicate the most common options that can be used. However, there is a wide range of options available, which we constantly supplement according to customer requirements. Therefore, if an option is not listed for the relevant cylinder type, but you have found it in this list, please check with our technical department whether such a option can be used for a specific cylinder type. If this is not possible, it is possible to manufacture an atypical cylinder according to specific requirements.

Option	Description
3	caps and other external steel parts will be made of stainless steel 17 240, piston rod material will be 17 348
5	all metal parts (external and internal) incl. tube will be made of stainless steel 17 240, piston rod material will be 17 348 (all stainless steel version)
6	front cap will be made of galvanized gray cast iron
7	cylinder caps will be made of galvanized gray cast iron
10	piston rod sealing elements will be made of material resistant to temperatures up to 200 °C
11	all sealing elements will be made of material resistant to temperatures up to 200 °C
13	instead of profile duralumin tube, round duralumin tube will be used
14	piston rod material will be 17 240
16	external steel parts will be made of stainless steel 17 240, piston rod material will be 17 348
17	all metal parts (external and internal) incl. tube will be made of stainless steel 17 240, piston rod material will be 17 348, all sealing elements will be made of material resistant to temperatures up to 200 °C (combination of option 5 and 11)
18	all sealing elements will be made of material suitable for use with hydraulic oil
23	caps will be made of galvanized gray cast iron or steel, the tube will be round steel (design suitable for heavy environments)
24	all sealing elements will be made of material resistant to temperatures up to 200 °C, the piston rod material will be 17 240 (combination of options 11 and 14)
25	piston rod without recess behind the thread
26	piston rod material will be 17 240 and the piston rod will be without recess behind the thread
27	caps will be made of galvanized gray cast iron, the piston rod material will be 17 348 (combination of options 7 and 45)
28	piston rod sealing elements will be made of material resistant to temperatures up to 200 °C, the external steel parts will be made of stainless steel 17 240, the piston rod material will be 17348 (combination of options 10 and 16)
29	all metal parts (external and internal) incl. tube will be made of stainless steel 17 240, the piston rod material will be 17 348, the piston rod sealing elements will be made of a material resistant to temperatures up to 200 °C (combination of options 5 and 10)
31	food-grade grease will be used
36	piston rod sealing elements will be made of material resistant to temperatures up to 200 °C, piston rod material will be 17 240 (combination of options 10 and 14)
37	instead of duralumin tube (or duralumin profile) a round composite tube will be used, piston rod sealing elements will be made of material resistant to temperatures up to 200 °C, external steel parts will be made of stainless steel 17 240, piston rod material will be 17 348
39	instead of duralumin tube (or duralumin profile) a round steel tube (sprayed with paint) will be used
40	ATEX certified, with round composite tube, Ex I M2 Ex h I Mb, Ex II -/2 G Ex h IIC T6 -/Gb, Ex II -/2 D Ex h IIIC T85°C -/Db
41	ATEX certified, with round steel tube, Ex I M2 Ex h I Mb, Ex II -/2 G Ex h IIC T6 -/Gb, Ex II -/2 D Ex h IIIC T85°C -/Db
42	ATEX certified, Ex II-/2 G Ex h IIC T6 -/Gb, Ex II-/2 D Ex h IIIC T85°C -/Db
43	piston rod seal will be with increased resistance for dusty and abrasive environments (e.g. concrete plants, sand pits)
44	all metal parts (external and internal) will be made of stainless steel 17 240, the tube will be round composite, the piston rod material will be 17 348, the piston rod sealing elements will be made of a material resistant to temperatures up to 200 °C
45	piston rod material will be 17 348
46	external steel parts will be made of stainless steel 17 240, the piston rod material will be 17 240
47	piston rod seal will be covered (and secured) to increase resistance to mechanical damage
48	piston rod seal will be with increased resistance for dusty and abrasive environments + round tube
49	piston rod seal will be with increased resistance for dusty and abrasive environments + external steel parts will be made of stainless steel 17 240, piston rod material will be 17 240 (connection options 43+46)
50	instead of duralumin tube (or duralumin profile) a round stainless steel tube will be used
51	instead of a duralumin tube (or duralumin profile), a round composite tube will be used

Selection of options of mounting accessories of pneumatic cylinders

Clamping accessories can also be manufactured with material, shape and dimensional options from standard types. However, it is necessary to check with our technical department whether the required option can be used for a specific type of accessory. If this is not possible, it is possible to manufacture atypical accessories according to specific requirements.

Option	Description
1	accessory material will be stainless steel 17 246
2	left-hand thread
10	pin and connecting material will be stainless steel 17 240
11	design for round cylinder tube
14	external thread

Option	Description
16	the material of the accessories will be galvanized gray cast iron
17	the material of the accessories will be galvanized steel
21	the thread (or just pitch) will have a different size
22	the steel parts will be stainless steel

Summary of the pneumatic symbols based on DIN ISO 1219

i

Energy conversion

Single acting cylinder, return movement by external force

Single acting cylinder, return movement by spring

Double acting cylinder

Double acting cylinder with double-ended piston rod

Double acting cylinder with adjustable cushioning at end of stroke

Double acting cylinder with double-ended piston rod and adjustable cushioning at end of stroke

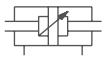

Double acting cylinder with adjustable cushioning at end of stroke and magnetic piston

Double acting cylinder with double-ended piston rod and adjustable cushioning at end of stroke and magnetic piston

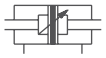

Pneumatic motor with limited range of swivel

Pressure intensifier for the same fluid

Pressure intensifier for air and liquid

Compressor

Vacuum pump

Directional control valves

2/2-way valve, manually actuated

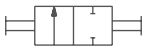

2/2-way valve, normally closed, solenoid actuated

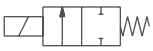

2/2-way valve, normally opened solenoid actuated

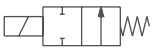

3/2-way valve, manually actuated

3/2-way valve, actuated by lever

3/2-way valve, actuated by pushbutton

3/2-way valve, actuated by pedal

3/2-way valve, pneumatically actuated, monostable

3/2-way valve, pneumatically actuated, bistable

5/2-way valve, pneumatically actuated, bistable

5/2-way valve, indirect solenoid actuated, monostable

5/2-way valve, indirect solenoid actuated, bistable

3/2-way valve, normally closed, actuated by roller lever

3/2-way valve, normally opened, actuated by roller lever

3/2-way valve, normally closed, actuated by roller lever with idle return

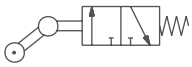

3/2-way valve, normally closed, indirect solenoid actuated

3/2-way valve, normally opened, indirect solenoid actuated

5/2-way valve, actuated by lever

5/2-way valve, actuated by pushbutton

5/2-way valve, actuated by pedal

5/2-way valve, pneumatically actuated, monostable

5/3-way valve, actuated by lever, centre position closed

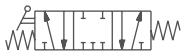

5/3-way valve, actuated by lever, centre position exhausted

5/3-way valve, indirect solenoid actuated, centre position closed

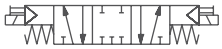

5/3-way valve, indirect solenoid actuated, centre position opened

Directional control valves generally and control mechanisms

2 positions

3 positions

Manual control - general

Pushbutton

Lever

Pedal

Plunger

Spring

Roller lever

Roller lever with idle return

Direct solenoid

Direct application of pressure

Direct application by pressure relief

Indirect by application of pressure (pilot)

Solenoid and pilot valve

Solenoid and pilot valve with manual override

Detent for 3 positions

Air preparation

Filter

Water separator

Water separator with automatic drain

Filter with water separator with automatic drain

Dryer

Lubricator

Standard unit (filter pressure regulator with gauge, lubricator), simplified representation

Pressure regulator

Energy transmission, valves

Working line

Control line

Exhaust line

Flexible pipeline

Line connection

Quick coupling with mechanically opened non-return valves, coupled

Rotary connection with 1 path

Rotary connection with 2 paths

Silencer

Quick exhaust valve

Pneumatic capacitor

Gauge

Pressure source

One-way flow control valve, adjustable

Bidirectional flow control valve, adjustable

Pressure switch

Check valve with spring

Piloted check valve

OR disjunction (logical sum)

AND conjunction (logical product)

Double acting

ISO 15552, VDMA 24562 1-2
Piston diameter 32 to 125 mm

DIN ISO 6431, VDMA 24562 1-4
Piston diameter 32 to 400 mm

DIN ISO 6431, VDMA 24562 with plastic end caps 1-6
Piston diameter 32 to 200 mm

DIN ISO 6431, VDMA 24562 with lock device .. 1-8
Piston diameter 32 to 125 mm

DIN ISO 6431, VDMA 24562 with end-pos.locking 1-10
Piston diameter 32 to 80 mm

DIN ISO 6431, VDMA 24562, tandem 1-12
Piston diameter 63 to 320 mm

ISO 21287 compact 1-14
Piston diameter 25 to 100 mm

CNOMO 06.07.02 1-16
Piston diameter 25 to 200 mm

DIN ISO 6432 1-18
Piston diameter 12 to 16 mm

DIN ISO 6432 1-20
Piston diameter 20 and 25 mm

DIN ISO 6432 with pressed-in tube 1-22
Piston diameter 8 to 25 mm

DIN ISO 6432 series MCMIS, stainless steel 1-24
Piston diameter 8 to 25 mm

PDSW 1-26
Piston diameter 32 to 63 mm

Anti-corrosive - hygienic clean 1-28
Piston diameter 32 to 100 mm

Short stroke 1-32
Piston diameter 20 to 100, 160 and 250 mm

Rotary actuators 1-34
Piston diameter 20 to 160 mm

Swing actuators series ATM 1-36
Piston diameter 52 to 400 mm

Rodless series OSP-P 1-38
Piston diameter 25 to 80 mm

Rodless, magnetically coupled, series MCRPM 1-40
Piston diameter 10 to 40 mm

Telescopic 1-42
Piston diameter 80 and 100 mm

Double acting with non-rotating rod

DIN ISO 6431, VDMA 24562 with double piston rod.. 1-44
Piston diameter 32 to 200 mm

ISO 15552, VDMA 24562, series MCKQI3 1-46
Piston diameter 32 and 40 mm

Compact, series MCKJQ3 1-48
Piston diameter 12 to 40 mm

DIN ISO 6432, series MCKMI 1-50
Piston diameter 16 to 25 mm

Series MCKMB 1-52
Piston diameter 20 to 40 mm

Double acting guide

Short stroke with guide with slide bearings 1-54
Piston diameter 20 to 100 and 160 mm

Series MCGS twin guide 1-56
Piston diameter 12 to 63 mm

Series MCGD twin guide, slide 1-60
Piston diameter 12 to 32 mm

Series MCDA double piston rod 1-62
Piston diameter 6 to 32 mm

Slide series MCSS 1-64
Piston diameter 6 to 25 mm

Stopper series MSBD, MSBR and MSBS 1-65
Piston diameter 20 to 80 mm

Single acting

DIN ISO 6431, VDMA 24562, NF E 49003.1 ... 1-66
Piston diameter 32 to 100 mm

ISO 21287 compact 1-68
Piston diameter 25 to 100 mm

DIN ISO 6432 1-70
Piston diameter 12 to 25

Short stroke 1-72
Piston diameter 20 to 100 and 160 mm

Series MCMJP 1-74
Piston diameter 6 to 15

Swing actuators series ATM 1-76
Piston diameter 52 to 400 mm

According to customer requirements

Cylinders to the customer's requirements 1-81
Piston diameter 8 to 600 mm

Actuators to the customer's requirements 1-82

DOUBLE ACTING PNEUMATIC CYLINDERS ISO 15552, VDMA 24562, NF E 49003.1

STRÁNSKÝ A PETRŽÍK

Modern design, quality processing and high-quality of used parts - there are characteristics of new cylinders series. Dimensions conforms to the international standards ISO 6431, VDMA 24562 and NF E 49003.1, that is why it can replace pneumatic cylinder, which is made by any producer to these standards. Fully adjustable cushioning at end of stroke and magnet for proximity switches are standard for this series. The proximity switches can be mounted directly to the tube's groove - so no brackets are necessary. The lifetime of cylinders is more than 4000 km at standard conditions.

Working pressure	0,6 MPa
Min. pressure	0,1 MPa
Max. pressure	1,0 MPa
Temp. range	-20°C to +80°C
Working medium	modified compressed air

Piston diameter [mm]	32	40	50	63	80	100	125
Thrust at 0.6 MPa [N]	482	754	1178	1870	3015	4713	7363
Thrust at 0.6 MPa [N] with double ended piston rod	415	633	990	1682	2720	4418	6880
Return force at 0.6 MPa [N]	415	633	990	1682	2720	4418	6880
Connection	G1/8“	G1/4“	G1/4“	G3/8“	G3/8“	G1/2“	G1/2“
Length of adjustable cushioning [mm]	17	17	17	16	20	18	28
Max. stroke [mm] *	1000*	1000*	1000*	1000*	1500*	1500*	2000*
Working speed [mm/s]	50 to 500						
Min. stroke for proximity sensing [mm]	17	21	25	25	25	25	25
Weight 0 mm stroke [kg]	0.46	0.74	1.27	1.70	2.65	3.67	5.53
Weight add. per 1 mm stroke [kg]	0.003	0.004	0.007	0.007	0.011	0.013	0.020
Weight 0 mm stroke [kg] with double ended piston rod	0.52	0.84	1.37	1.90	2.97	4.31	6.54
Weight add. per 1 mm stroke [kg] with dbl. ended piston rod	0.004	0.006	0.009	0.009	0.015	0.017	0.026

*) Stroke of cylinder may be longer after agreement with our technical dept.

Order codes

10201 60 00 050 0100

Type	
10201	ISO 15552, VDMA 24562, NF E 49003.1, double acting

Equipment	
60	with cushioning, with magnet
65	with double ended piston rod, with cushioning, with magnet

Options	
00	without options
14	1.4301 stainless steel piston rod
16	steel parts from stainless 1.4301 piston rod stainless 1.4401
28	Viton® piston rod sealing + option 16

Piston diameter	
032	32 mm
040	40 mm
050	50 mm
063	63 mm
080	80 mm
100	100 mm
125	125 mm

Stroke / Repair kit	
xxxx	mm of stroke e.g.: 0100 = stroke 100 mm
9999	repair kit

Construction / materials

- caps: aluminium mold casting
- body: drawn dural profile, anodized
- piston rod: grounded round steel bar CK45 with hard chrome plated surface

For more options regarding materials or dimensions, please contact our technical dept.

Dimensions

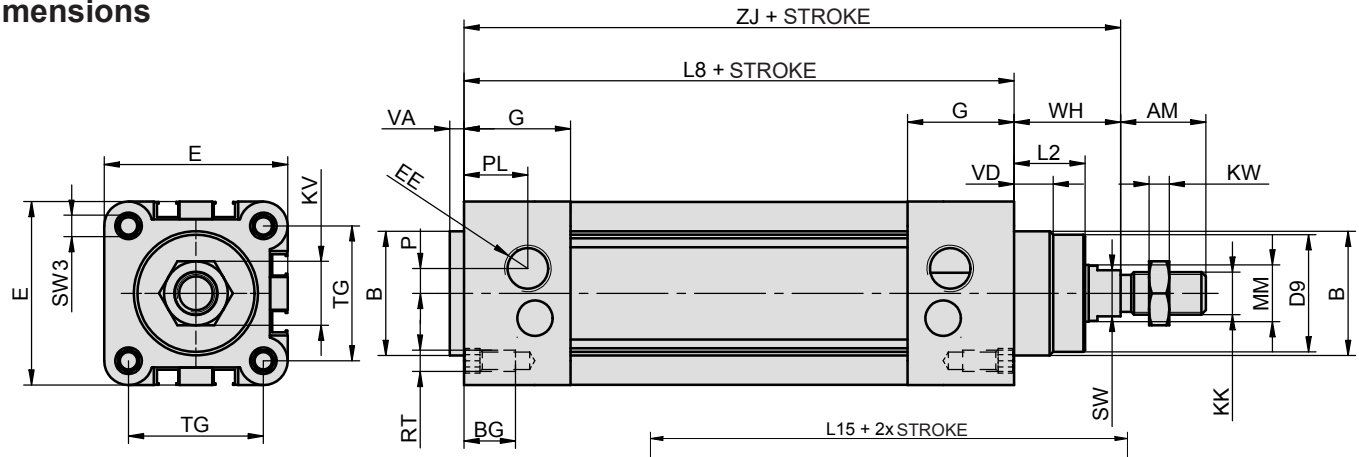

Double ended piston rod: other dimensions are the same as standard type)

∅	AM	B	BG	D9	E	EE	G	KK	KV	KW	L2	L8	L15	MM	P	PL	RT	SW	SW3	TG	VA	VD	WH	ZJ
32	22	30	16	28	46	G1/8“	25	M10x1.25	17	6	18	94	146	12	5	16	M6	10	6	32.5	4	10	26	120
40	24	35	14.5	33	52	G1/4“	30	M12x1.25	19	7	21.5	105	165	16	6	14	M6	13	6	38	4	11	30	135
50	32	40	17	38	64	G1/4“	30	M16x1.5	24	8	28	106	180	20	7	20	M8	16	8	46.5	4	11	37	143
63	32	45	17	38	75	G3/8“	36	M16x1.5	24	8	28.5	121	195	20	7	17	M8	16	8	56.5	4	11	37	158
80	40	45	17	44	93	G3/8“	36	M20x1.5	30	9	34.7	128	220	25	8	28	M10	21	10	72	4	11	46	174
100	40	55	17	44	110	G1/2“	39	M20x1.5	30	9	38.2	138	240	25	10	32	M10	21	10	89	4	11	51	189
125	54	60	18	54	135	G1/2“	44	M27x2	36	11	46	160	290	32	10	30	M12	27	12	110	6	11	65	225

Mounting accessories

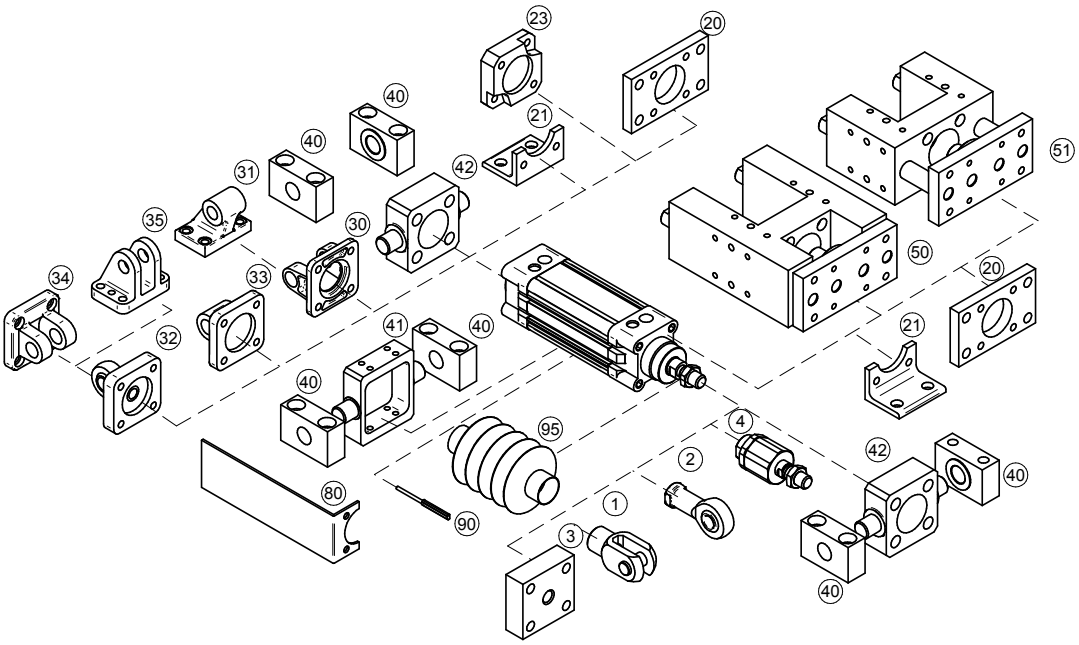

Mounting accessories	... see page
1 Piston rod clevis	... 4-2
2 Piston rod eye	... 4-3
3 Flanged piston rod coupling	... 4-2
4 Self-aligning piston rod coupling	... 4-3
20 Flange mounting	... 4-5
21 Foot mounting	... 4-5
23 Boxer flange mounting	... 4-6
30 Swivel flange	... 4-7
31 Clevis foot mounting	... 4-7
32 Swivel flange with spherical bearing	... 4-8
33 Swivel flange	... 4-8
34 Narrow swivel flange	... 4-9
35 Rectangular swivel flange	... 4-9
40 Trunnion mounting	... 4-10
41 Pivot pin	... 4-12
42 Pivot pin to front/end cap	... 4-12
50 Guide unit H with ball bearings	... 4-13
51 Guide unit with slide bearings	... 4-15
80 Valve bracket	... 4-12
90 Proximity switch	... 3-2, 3-4
90 Proportional position sensor with analog output	... 3-6
95 Piston rod protective cover	... 4-4

DOUBLE ACTING PNEUMATIC CYLINDERS VDMA 24562, NF E 49003.1

STRÁNSKÝ A PETRŽÍK

Cylinders are designed to meet the specifications of international standards ISO 6431, VDMA 24562 and NF E 49003.1, that is why it can replace pneumatic cylinder, which is made by any producer to these standards. The cylinders can work in higher temperatures by request. Fully adjustable cushioning at end of stroke is available. The cylinders can be delivered in explosion proof version (Ex, see details in ATEX options).

Working pressure	0,6 MPa
Min. pressure	0,15 MPa
Max. pressure	1,0 MPa
Temp. range	-30°C to +80°C *
Working medium	modified compressed air

*) values are valid for standard gaskets

Piston diameter [mm]	32	40	50	63	80	100	125	160	200	250	320	400
Thrust at 0,6 MPa [N]	482	754	1178	1870	3015	4713	7363	12064	18849	29460	48254	75398
Thrust at 0,6 MPa [N] with double ended piston rod	415	633	990	1682	2720	4418	6880	11581	18096	28274	46384	71657
Return force at 0,6 MPa [N]	415	633	990	1682	2720	4418	6880	11581	18096	28274	46384	71657
Connection	G1/8“	G1/4“	G1/4“	G3/8“	G3/8“	G1/2“	G1/2“	G3/4“	G3/4“	G1“	G1“	G1“
Length of adjustable cushioning [mm]	13	13	11	16	16	20	25	27	32	40	48	48
Max. stroke [mm] *	1000*	1000*	1000*	1000*	1500*	1500*	2000*	2000*	2000*	2000*	2000*	1500*
Weight 0 mm stroke [kg]	0,54	0,80	1,10	1,70	2,70	4,20	7,60	13,30	20,50	29,00	69,50	120,00
Weight add. per 1 mm stroke [kg]	0,0028	0,0037	0,0060	0,0062	0,0100	0,0110	0,0160	0,0280	0,0300	0,0340	0,0650	0,113
Weight 0 mm stroke [kg] with double ended piston rod	0,64	0,90	1,30	1,90	3,40	5,00	9,40	16,30	22,50	33,00	74,00	129,00
Weight add. per 1 mm stroke [kg] with double ended piston rod	0,0038	0,0047	0,0080	0,0082	0,0140	0,0150	0,0220	0,0400	0,0420	0,0460	0,0810	0,137

*) Stroke of cylinder may be longer after agreement with our technical dept.

Order codes

10101 60 00 050 0100

Type	
10101	DIN ISO 6431, VDMA 24562, NF E 49003.1, double acting

Equipment	
00	w/o cushioning, w/o magnet
05	with double ended piston rod, w/o cushioning, w/o magnet
10	w/o cushioning, with magnet
15	with double ended piston rod, w/o cushioning, with magnet
50	with cushioning, w/o magnet
55	with double ended piston rod, with cushioning, w/o magnet
60	with cushioning, with magnet
65	with double ended piston rod, with cushioning, with magnet

Options	
00	without options
05*	all parts stainless steel, piston rod 1.4401
10	Viton® piston rod sealing
11	Viton® gaskets (up to 180°C)
13*	tie rod version
14	1.4301 stainless steel piston rod
16	steel parts from stainless 1.4301 piston rod stainless 1.4401
37	composite round tube+opt. 10 and 16
44	composite round tube+opt. 5 and 10
40	ATEX, composite round tube Ex I M2 Ex h I Mb Ex II -/2 G Ex h IIC T6 -/Gb Ex II -/2 D Ex h IIIC T85°C -/Db
41	ATEX, steel round tube Ex I M2 Ex h I Mb Ex II -/2 G Ex h IIC T6 -/Gb Ex II -/2 D Ex h IIIC T85°C -/Db
42	ATEX, Ex II-/2 G Ex h IIC T6 -/Gb Ex II-/2 D Ex h IIIC T85°C -/Db

Piston diameter	
032	32 mm
040	40 mm
050	50 mm
063	63 mm
080	80 mm
100	100 mm
125	125 mm
160	160 mm
200	200 mm
250	250 mm
320	320 mm
400	400 mm

Stroke / Repair kit	
xxxx	mm of stroke e.g.: 0100 = stroke 100 mm
9999	repair kit

For more options regarding materials or dimensions, please contact our technical dept.

*) For piston dia. 32 to 100 incl.

Construction / materials

- caps: drawn dural profile, anodised, piston dia. 100 and more: aluminium casting, anodised
- body: drawn dural profile, anodized, piston dia. 125 and more: drawn dural tube, anodized, piston dia. 400: steel or composite sandwich plastic
- piston rod: grounded round steel bar CK45 with hard chrome plated surface

Dimensions

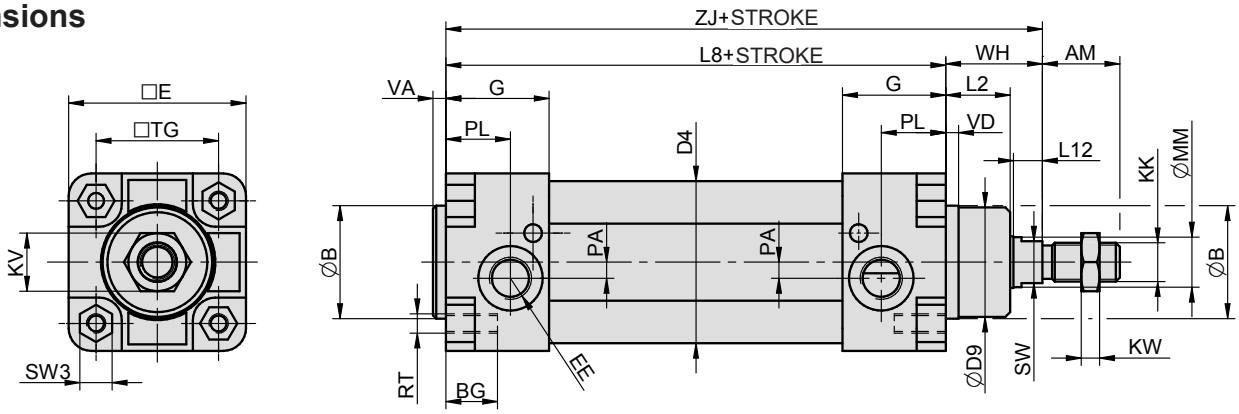

Double ended piston rod: other dimensions are the same as standard type)

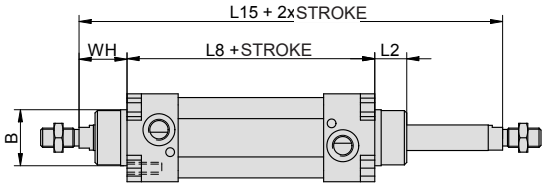

∅	AM	B	BG	D4	D9	E	EE	G	KK	KV	KW	L2	L8	L12	L15	MM	PA	PL	RT	SW	SW3	TG	VA	VD	WH	ZJ
32	22	30	16	36	28	48	G1/8“	31,5	M10x1,25	17	6	18	94	8	146	12	5	22,5	M6	10	10	32,5	4	4	26	120
40	24	35	16	45	34	55	G1/4“	32	M12x1,25	19	10	20	105	9	165	16	5	20	M6	13	10	38	4	4	30	135
50	32	40	19	55	39	65	G1/4“	30	M16x1,5	24	8	22	106	10	180	20	3	17	M8	16	14	46,5	4	5	37	143
63	32	45	19	68	44	75	G3/8“	30	M16x1,5	24	8	23	121	10	195	20	6	16	M8	16	14	56,5	4	5	37	158
80	40	45	19	86	44	94	G3/8“	30	M20x1,5	30	9	31	128	10	220	25	10	16	M10	21	17	72	4	5	46	174
100	40	55	19	106	54	115	G1/2“	36	M20x1,5	30	9	34	138	10	240	25	11	18	M10	21	17	89	4	17	51	189
125	54	60	20	132	58	140	G1/2“	40	M27x2	41	12	50	160	14	290	32	11	22	M12	27	22	110	6	6	65	225
160	72	65	24	168	64	185	G3/4“	50	M36x2	55	18	50	180	20	340	40	10	25	M16	36	30	140	6	10	80	260
200	72	75	24	212	74	235	G3/4“	50	M36x2	55	18	55	180	20	370	40	12	25	M16	36	30	175	6	20	95	275
250	84	90	32	262	84	270	G1“	54	M42x2	65	21	76	200	22	410	50	25	32	M20	46	36	220	10	10	105	305
320	96	110	30	340	100	350	G1“	57	M48x2	75	24	85	220	24	560	63	23	32	M24	55	41	270	10	35	120	340
400	96	110	28	420	100	430	G1“	57,5	M48x2	75	24	85	220	26	560	63	25	32	M24	55	41	350	10	35	120	340

Mounting accessories

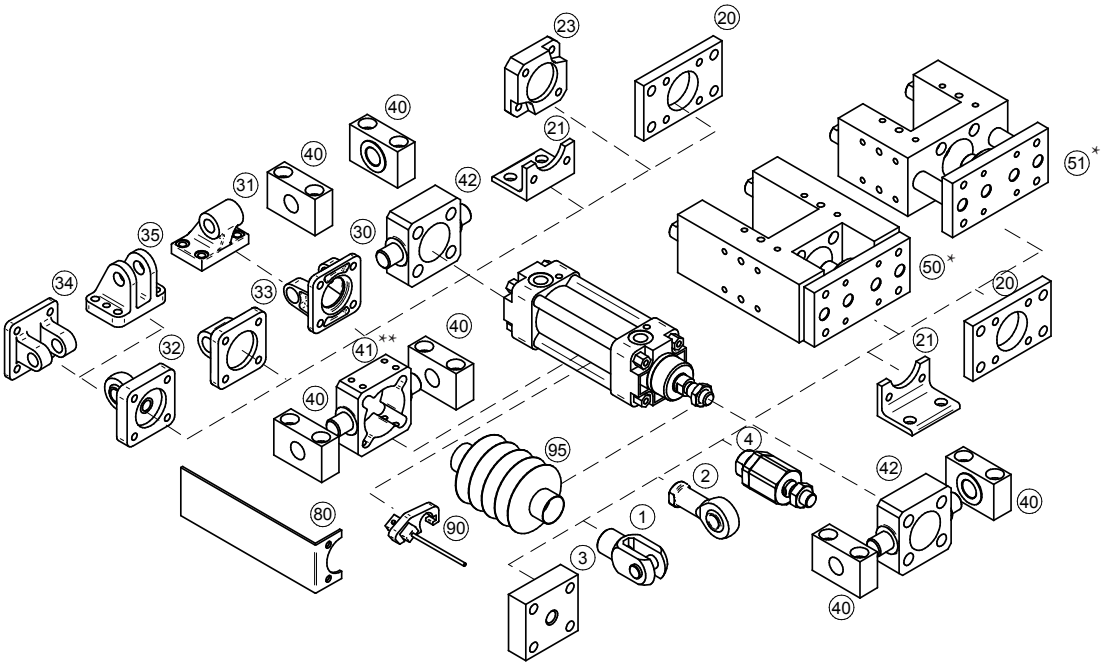

Mounting accessories	... see page
1 Piston rod clevis	... 4-2
2 Piston rod eye	... 4-3
3 Flanged piston rod coupl.	... 4-2
4 Self-align. piston rod coupl.	... 4-3
20 Flange mounting	... 4-5
21 Foot mounting	... 4-5
23 Boxer flange mounting	... 4-6
30 Swivel flange	... 4-7
31 Clevis foot mounting	... 4-7
32 Swivel flange with spherical bearing	... 4-8
33 Swivel flange	... 4-8
34 Narrow swivel flange	... 4-9
35 Rectangular swivel flange	... 4-9
40 Trunnion mounting	... 4-10
41 Pivot pin**	... 4-11
42 Pivot pin to front/end cap	... 4-12
50 Guide unit H with ball bearings*	... 4-13
51 Guide unit with slide bearings*	... 4-15
80 Valve bracket	... 4-12
90 Prox. switch	... 3-2, 3-4, 3-7
95 Piston rod protective cover	... 4-4

*) When guide unit H or U is used on cylinder with magnetic piston, it is necessary to use cylinder with tie rod version (option No. 13). There is no free space to mount switch bracket near the front cap when the profile tube is used (position for extend piston rod).
**) Type of pivot pin should be selected accordingly to the cylinder profile/tube - with cutout for profile or for round tube.

DOUBLE ACTING PNEUMATIC CYLINDERS VDMA 24562, NF E 49003.1 WITH PLASTIC END CAPS

STRÁNSKÝ A PETRŽÍK

1

The dimensions of these cylinders comply with the international standards ISO 6431, VDMA 24562 and NF E 49003.1 and are therefore easily interchangeable. The cylinders can have adjustable cushioning at end positions and are equipped with a magnet in the piston for the possibility of sensing end positions. The smooth design facilitates rinsing of dirt, the construction minimizes gaps and places with poor accessibility for cleaning the cylinder surface. The end caps are made of plastics that are chemically resistant to mild alkalis and acids used in cleaning equipment in the food industry. This type of cylinder is not a replacement for a stainless steel cylinder, but it is an affordable alternative.

Working pressure	0,6 MPa
Min. pressure	0,15 MPa
Max. pressure	1,0 MPa
Temp. range	-30°C to +60°C *
Working medium	modified compressed air

*) values are valid for standard gaskets

Piston diameter [mm]	32	40	50	63	80	100	125	160	200
Thrust at 0,6 MPa [N]	482	754	1178	1870	3015	4713	7363	12064	18849
Thrust at 0,6 MPa [N] with double ended piston rod	415	633	990	1682	2720	4418	6880	11581	18096
Return force at 0,6 MPa [N]	415	633	990	1682	2720	4418	6880	11581	18096
Connection	G1/8“	G1/4“	G1/4“	G3/8“	G3/8“	G1/2“	G1/2“	G3/4“	G3/4“
Length of adjustable cushioning [mm]	13	13	11	16	16	20	25	27	32
Max. stroke [mm] *	1000*	1000*	1000*	1000*	1500*	1500*	2000*	2000*	2000*
Weight 0 mm stroke [kg]	0,37	0,55	0,81	1,21	1,97	3,40	6,50	11,20	18,00
Weight add. per 1 mm stroke [kg]	0,0028	0,0037	0,0060	0,0062	0,0100	0,0110	0,0160	0,0280	0,0300
Weight 0 mm stroke [kg] with double ended piston rod	0,46	0,65	1,00	1,39	2,60	4,15	8,20	14,10	19,50
Weight add. per 1 mm stroke [kg] with double ended piston rod	0,0038	0,0047	0,0080	0,0082	0,0140	0,0150	0,0220	0,0400	0,0420

*) Stroke of cylinder may be longer after agreement with our technical dept.

Order codes

10301 60 00 050 0100

Type	
10301	DIN ISO 6431, VDMA 24562, NF E 49003.1, double acting with plastic end caps

Equipment	
00	w/o cushioning, w/o magnet
05	with double ended piston rod, w/o cushioning, w/o magnet
60	with cushioning, with magnet
65	with double ended piston rod, with cushioning, with magnet

Options	
00	without options
43	E8 seal (PU with high abrasion resistance)
50	stainless steel tube
51	composite tube

For more options regarding materials or dimensions, please contact our technical dept.

Piston diameter	
032	32 mm
040	40 mm
050	50 mm
063	63 mm
080	80 mm
100	100 mm
125	125 mm
160	160 mm
200	200 mm

Stroke / Repair kit	
xxxx	mm of stroke e.g.: 0100 = stroke 100 mm
9999	repair kit

The plastic material of the end caps has significantly better resistance than most Al alloys, and is cheaper than stainless steel materials. The cylinders are suitable for environments with moderate exposure to chemically aggressive substances, which some Al alloys cannot withstand.

Construction / materials

- caps: POM plastic
- body: drawn aluminium tube, anodized
- piston rod: ground stainless steel rod 1.4301, surface chrome-plated
- piston rod seal: FPM (FKM)
- other seals: NBR or PU
- steel parts: stainless steel 1.4301

Dimensions

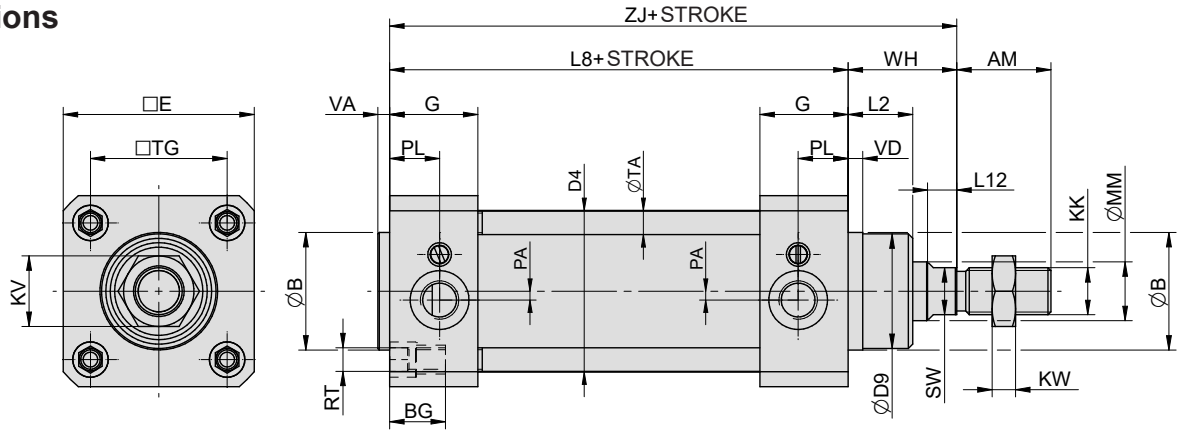

Double ended piston rod: other dimensions are the same as standard type)

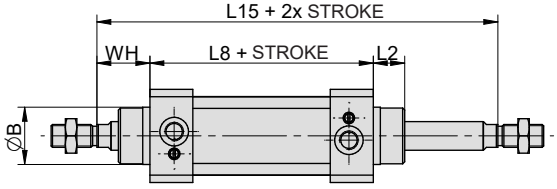

∅	AM	B	BG	D4	D9	E	EE	G	KK	KV	KW	L2	L8	L12	L15	MM	PA	PL	RT	SW	TA	TG	VA	VD	WH	ZJ
32	22	30	16	36	28	48	G1/8“	31,5	M10x1,25	17	6	18	94	8	146	12	5	22,5	M6	10	5,25	32,5	4	4	26	120
40	24	35	16	45	34	55	G1/4“	32	M12x1,25	19	10	20	105	9	165	16	5	20	M6	13	5,25	38	4	4	30	135
50	32	40	19	55	39	65	G1/4“	30	M16x1,5	24	8	22	106	10	180	20	3	17	M8	16	7,1	46,5	4	5	37	143
63	32	45	19	68	44	75	G3/8“	30	M16x1,5	24	8	23	121	10	195	20	6	16	M8	16	7,1	56,5	4	5	37	158
80	40	45	19	86	44	94	G3/8“	30	M20x1,5	30	9	31	128	10	220	25	10	16	M10	21	8,85	72	4	5	46	174
100	40	55	19	106	54	115	G1/2“	36	M20x1,5	30	9	34	138	10	240	25	11	18	M10	21	8,85	89	4	17	51	189
125	54	60	20	132	58	140	G1/2“	40	M27x2	41	12	50	160	14	290	32	11	22	M12	27	10,7	110	6	6	65	225
160	72	65	24	168	64	185	G3/4“	50	M36x2	55	18	50	180	20	340	40	10	25	M16	36	16	140	6	10	80	260
200	72	75	24	212	74	235	G3/4“	50	M36x2	55	18	55	180	20	370	40	12	25	M16	36	16	175	6	20	95	275

Mounting accessories
(stainless steel)

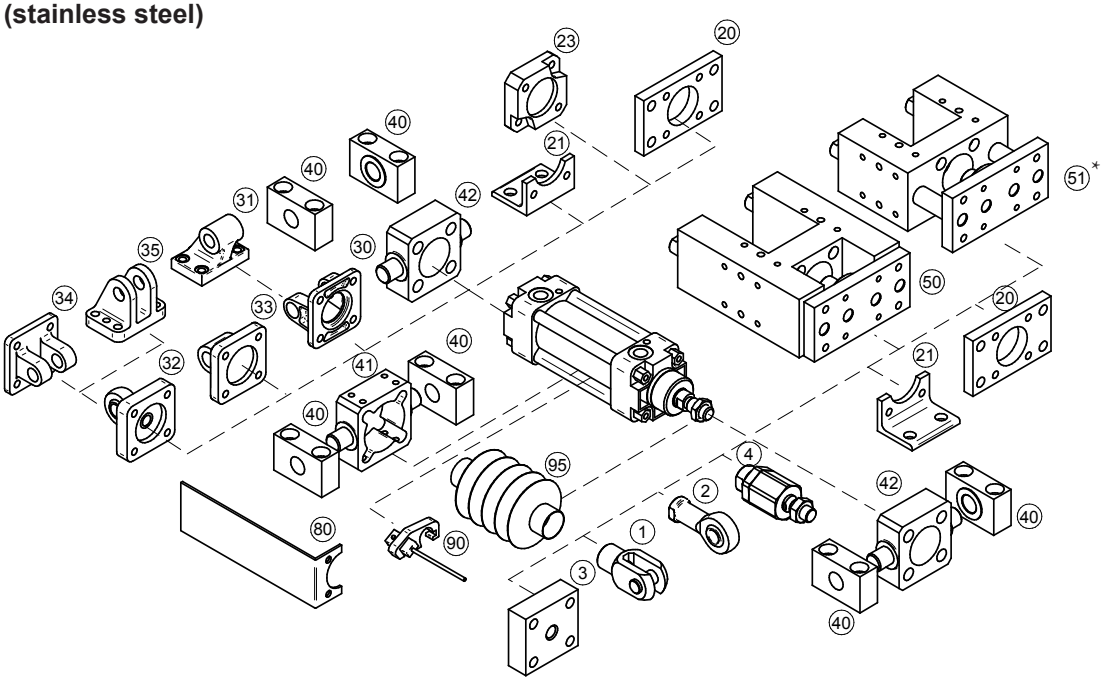

Mounting accessories	... see page
1 Piston rod clevis	... 4-26
2 Piston rod eye	... 4-26
3 Flanged piston rod coupl.	✓
4 Self-align. piston rod coupl.	✓
20 Flange mounting	✓
21 Foot mounting	✓
23 Boxer flange mounting	✓
30 Swivel flange	✓
31 Clevis foot mounting	✓
32 Swivel flange with spherical bearing	✓
33 Swivel flange	✓
34 Narrow swivel flange	✓
35 Rectangular swivel flange	✓
40 Trunnion mounting	✓
41 Pivot pin**	✓
42 Pivot pin to front/end cap	✓
50 Guide unit H with ball bearings*	✓
51 Guide unit with slide bearings*	✓
80 Valve bracket	✓
90 Prox. switch	... 3-2, 3-4, 3-7
95 Piston rod protective cover	... 4-4

DOUBLE ACTING PNEUMATIC CYLINDERS WITH LOCK DEVICE VDMA 24562, NF E 49003.1

STRÁNSKÝ A PETRŽÍK

1

Cylinders are designed to meet the specifications of international standard VDMA 24562 for mounting. The cylinders can work in higher temperatures by request. Fully adjustable cushioning at end of stroke is available. Lock device is actuated by spring force and deactivated by compressed air. Lock device is self-locking.

Lock device is not a safety element! The user must take relevant safety precautions!

Working pressure	0,6 MPa
Min. pressure	0,15 MPa
Max. pressure	1,0 MPa
Min. pressure for lock release	0,2 MPa
Locking direction	both direction
Temp. range	-20°C to +80°C *
Working medium	modified compressed air

*) values are valid for standard gaskets

Warning

Clamping force is purely static. When exceeding load, slipping of piston rod may occur, or piston rod and/or lock device can be damaged. Right connection and suitable designed control is necessary for impact free work. Please consult your connection with our technical dept.

Piston diameter [mm]	32	40	50	63	80	100	125
Thrust at 0,6 MPa [N]	482	754	1178	1870	3015	4713	7363
Thrust at 0,6 MPa [N] with double ended piston rod	415	633	990	1682	2720	4418	6880
Return force at 0,6 MPa [N]	415	633	990	1682	2720	4418	6880
Static clamping force [N]	>482	>754	>1178	>1870	>3015	>4713	>7363
Connection	G1/8“	G1/4“	G1/4“	G3/8“	G3/8“	G1/2“	G1/2“
Length of adjustable cushioning [mm]	13	13	11	16	16	20	25
Max. stroke [mm] *	1000*	1000*	1000*	1000*	1000*	1000*	1500*
Weight 0 mm stroke [kg]	1,15	1,62	2,80	3,90	6,20	9,80	20,6
Weight add. per 1 mm stroke [kg]	0,0028	0,0037	0,0060	0,0062	0,0100	0,0110	0,0160
Weight 0 mm stroke [kg] with double ended piston rod	1,25	1,72	3,00	4,10	6,90	10,60	22,4
Weight add. per 1 mm stroke [kg] with dbl. ended piston rod	0,0038	0,0047	0,0080	0,0082	0,0140	0,0150	0,0220

*) Stroke of cylinder may be longer after agreement with our technical dept.

Order codes

10110 60 00 050 0100

Type	
10110	DIN ISO 6431, VDMA 24562, NF E 49003.1, double acting, with lock device

Equipment	
00	w/o cushioning, w/o magnet
05	double ended piston rod, w/o cushioning, w/o magnet
10	w/o cushioning, with magnet
15	double ended piston rod, w/o cushioning, with magnet
50	with cushioning, w/o magnet
55	double ended piston rod, with cushioning, w/o magnet
60	with cushioning, with magnet
65	double ended piston rod, with cushioning, with magnet

Options	
00	without options
10	Viton® piston rod sealing
11	Viton® gaskets (up to 180°C)
13	round tube*
14	1.4301 stainless steel piston rod

*) Only valid for piston dia. 32 to 100 mm included

For more options regarding materials or dimensions, please contact our technical dept.

Piston diameter	
032	32 mm
040	40 mm
050	50 mm
063	63 mm
080	80 mm
100	100 mm
125	125 mm

Stroke / Repair kit	
xxxx	mm of stroke e.g.: 0100 = stroke 100 mm
9999	repair kit

Construction / materials

- caps: drawn dural profile, anodised, piston dia. 100: aluminium casting, anodised
- body: drawn dural profile, anodized
- piston rod: grounded round steel bar CK45 with hard chrome plated surface

Dimensions

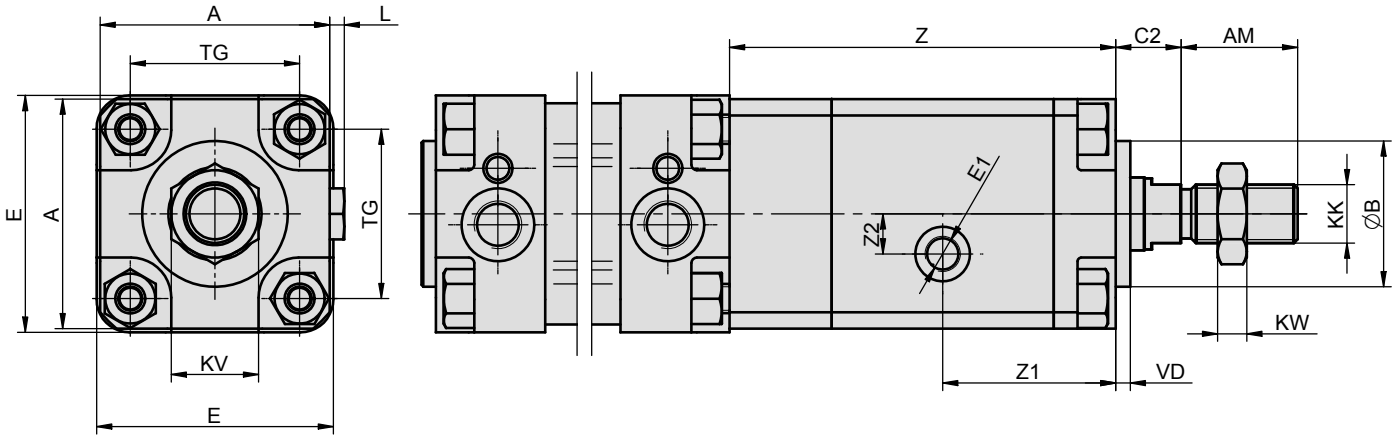

∅	A	AM	B	C2	E	E1	KK	KV	KW	L	TG	VD	Z	Z1	Z2
32	45	22	30	13,5	48	G1/8“	M10x1,25	16	5	4	32,5	4	95	47	5
40	56	24	35	16	55	G1/8“	M12x1,25	18	6	4	38	4	107	49,5	9
50	63	32	40	18	65	G1/8“	M16x1,5	24	8	4	46,5	4	106	46,5	11
63	70	32	45	18	75	G1/8“	M16x1,5	24	8	4	56,5	4	116	52,5	11
80	90	40	45	18	94	G1/8“	M20x1,5	30	10	5	72	5	150	65	18
100	110	43	55	18	115	G1/8“	M20x1,5	30	10	5	89	5	158	66,5	18
125	140	54	60	22	140	G1/4“	M27x2	30	13	–	110	5	255	106	0

For dimensions of pneumatic cylinder on which the lock device is attached, see page 1-5.

Connection example for pushbutton control:

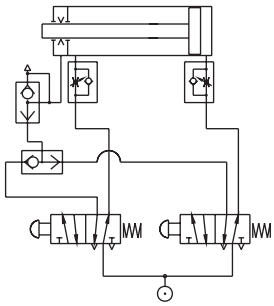

Pressing the left pushbutton, the lock unit will unclamp and air which flows through right push-button into cylinder will extend it. After release pushbutton, compressed air is released from lock unit, which clamps piston rod and cylinder stops. For quick stopping of cylinder, the quick exhaust valve is used. The im-portant on this connection is, that both chambers of cylinder are still with compressed air and for motion control discharging of air from particular chambers is used, which prevents from impacts or unwanted countermovements.

Mounting accessories

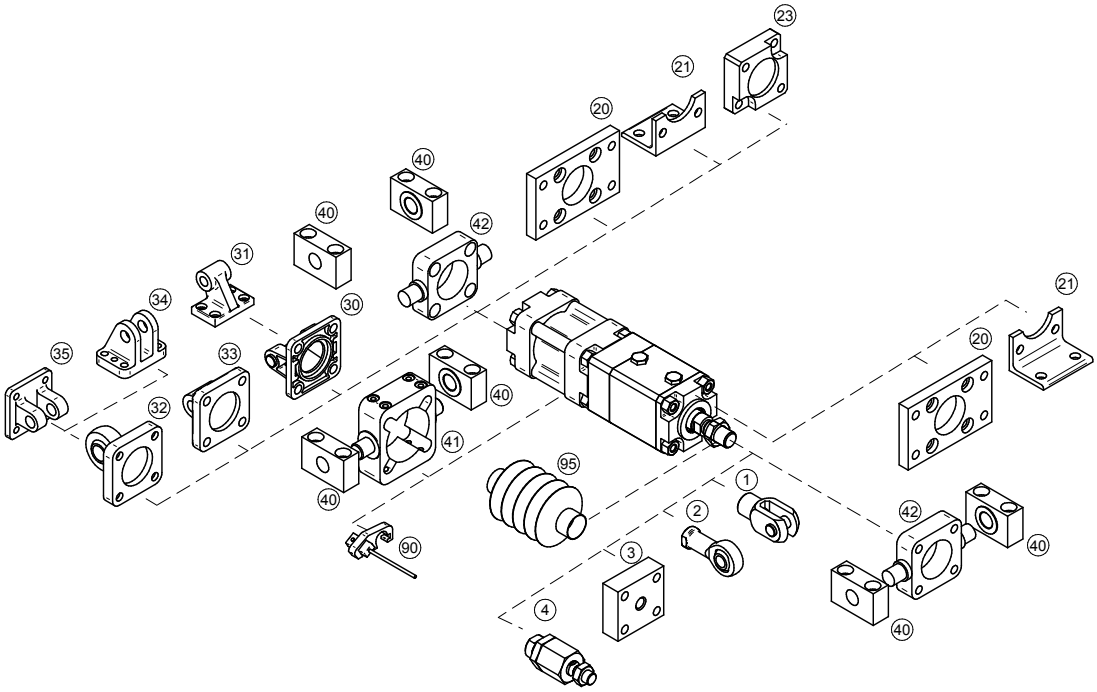

Mounting accessories	... see page
1 Piston rod clevis	... 4-2
2 Piston rod eye	... 4-3
3 Flanged piston rod coupling	... 4-2
4 Self-aligning piston rod coupling	... 4-3
20 Flange mounting	... 4-5
21 Foot mounting	... 4-5
23 Boxer flange mounting	... 4-6
30 Swivel flange	... 4-7
31 Clevis foot mounting	... 4-7
32 Swivel flange with spherical bearing	... 4-8
33 Swivel flange	... 4-8
34 Narrow swivel flange	... 4-9
35 Rectangular swivel flange	... 4-9
40 Trunnion mounting	... 4-10
41 Pivot pin	... 4-11
42 Pivot pin to front/end cap	... 4-12
90 Prox. switch	... 3-2, 3-4, 3-7
95 Piston rod protective cover	... 4-4

DOUBLE ACTING PNEUMATIC CYLINDERS ISO 6431, VDMA 24562, NF E 49003.1 WITH END-POSITION LOCKING

STRÁNSKÝ A PETRŽÍK

1

Modern design, quality processing and high-quality of used parts - these are characteristics of the new cylinders series. Cylinders are equipped with automatic locking device in one or both end positions. When air supply failure occurs, cylinder is locked in its end position. Release then happens automatically after air supply is restored. Dimensions conform to the international standards ISO 6431, VDMA 24562 and NF E 49003.1, that is why it can replace a pneumatic cylinder, which is made by any producer to these standards. Fully adjustable cushioning at end of stroke and magnet for proximity switches are standard for this series. The proximity switches can be mounted directly to the tube's groove - so no brackets are necessary.

Working pressure	0,6 MPa
Min. pressure	0,1 MPa
Max. pressure	1,0 MPa
Temp. range	-20°C to +80°C
Working medium	modified compressed air

Warning

For the correct function of unlocking the piston rod during start-up, it is necessary to use a throttle valve on the cylinder with a function of throttling the output.

Piston diameter [mm]	32	40	50	63	80
Thrust at 0,6 MPa [N]	482	754	1178	1870	3015
Thrust at 0,6 MPa [N] with double ended piston rod	415	633	990	1682	2720
Return force at 0,6 MPa [N]	415	633	990	1682	2720
Connection	G1/8“	G1/4“	G1/4“	G3/8“	G3/8“
Length of adjustable cushioning [mm]	17	17	17	16	20
Max. stroke [mm] *	1000*	1000*	1000*	1000*	1500*
Working speed [mm/s]	50 to 500				
Min. stroke for proximity sensing [mm]	17	21	25	25	25
Weight 0 mm stroke [kg]	0.50	0.78	1.38	1.81	3.84
Weight add. per 1 mm stroke [kg]	0.003	0.004	0.007	0.007	0.013
Weight 0 mm stroke [kg] with double ended piston rod	0.56	0.88	1.48	2.01	5.19
Weight add. per 1 mm stroke [kg] with dbl. ended piston rod	0.004	0.006	0.009	0.009	0.017

*) Stroke of cylinder may be longer after agreement with our technical dept.

Order codes

10213 60 00 050 0100

Type	
10211	double acting, locking in advanced position
10212	double acting, locking in retracted position
10213	double acting, locking in both positions

Equipment	
60	with cushioning, with magnet
65	with double ended piston rod, with cushioning, with magnet

Options	
00	without options
14	1.4301 stainless steel piston rod

For more options regarding materials or dimensions, please contact our technical dept.

Piston diameter	
032	32 mm
040	40 mm
050	50 mm
063	63 mm
080	80 mm

Stroke / Repair kit	
xxxx	mm of stroke e.g.: 0100 = stroke 100 mm
9999	repair kit

Construction / materials

- caps: aluminium mold casting
- body: drawn dural profile, anodized
- piston rod: grounded round steel bar CK45 with hard chrome plated surface

Dimensions

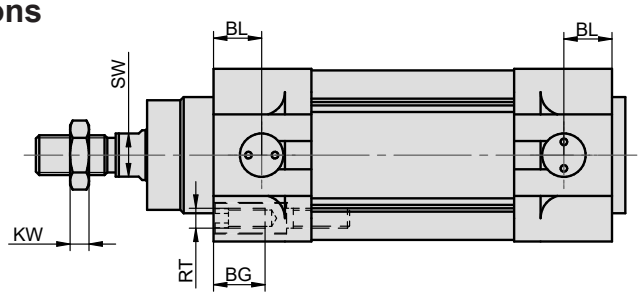

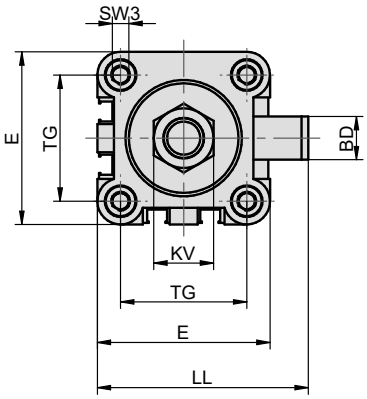

Double ended piston rod:
(other dimensions are the same as standard type)

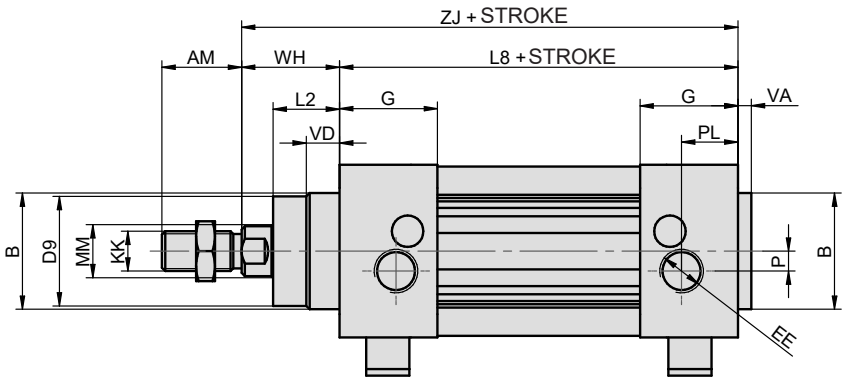

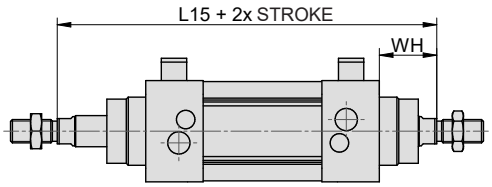

∅	AM	B	BD	BG	BL	D9	E	EE	G	KK	KV	KW	LL	L2	L8	L15	MM	P	PL	RT	SW	SW3	TG	VA	VD	WH	ZJ
32	22	30	13	16	11	28	45	G1/8“	25	M10x1.25	17	6	58.5	18	94	146	12	3	16	M6	10	6	32.5	4	10	26	120
40	24	35	13	16	14.5	33	54	G1/4“	30	M12x1.25	19	7	63.5	21.5	105	165	16	6	14	M6	13	6	38	4	11	30	135
50	32	40	16	14	15	39	65	G1/4“	30	M16x1.5	24	8	79	22	106	180	20	3	17	M8	16	8	46.5	4	5	37	143
63	32	45	16	17	15	44	75	G3/8“	30	M16x1.5	24	8	84	23	121	195	20	6	16	M8	16	14	56.5	4	5	37	158
80	40	45	36	20	15	44	95	G3/8“	30	M20x1.5	30	10	113.5	31	128	220	25	10	16	M10	21	17	72	4	5	46	174

Mounting accessories

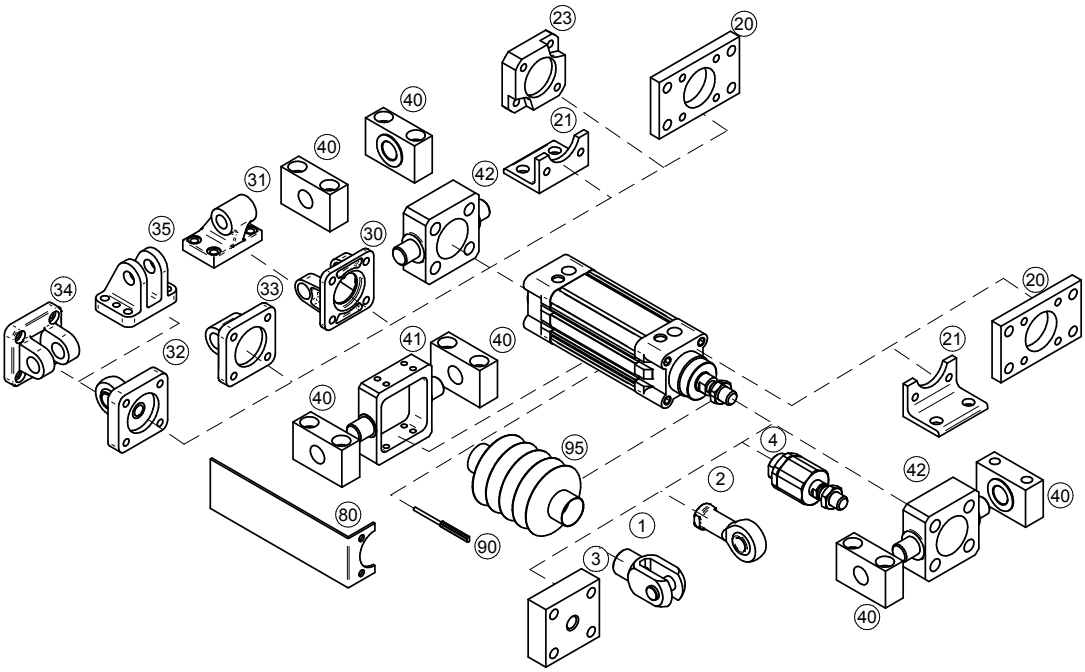

Mounting accessories	... see page
1 Piston rod clevis	... 4-2
2 Piston rod eye	... 4-3
3 Flanged piston rod coupling	... 4-2
4 Self-aligning piston rod coupling	... 4-3
20 Flange mounting	... 4-5
21 Foot mounting	... 4-5
23 Boxer flange mounting	... 4-6
30 Swivel flange	... 4-7
31 Clevis foot mounting	... 4-7
32 Swivel flange with spherical bearing	... 4-8
33 Swivel flange	... 4-8
34 Narrow swivel flange	... 4-9
35 Rectangular swivel flange	... 4-9
40 Trunnion mounting	... 4-10
41 Pivot pin	... 4-12
42 Pivot pin to front/end cap	... 4-12
80 Valve bracket	... 4-12
90 Proximity switch	... 3-2, 3-4
90 Proportional position sensor with analog output	... 3-6
95 Piston rod protective cover	... 4-4

DOUBLE ACTING PNEUMATIC TANDEM CYLINDERS VDMA 24562, NF E 49003.1

STRÁNSKÝ A PETRŽÍK

Tandem cylinder is built-up from two or three cylinders, has common piston rod and almost double or triple thrust and return force. Cylinders are designed to meet the specifications of international standard ISO 6431, VDMA 24562 a NF E 49003.1 for mounting. The cylinders can work in higher temperatures by request. Fully adjustable cushioning at end of stroke is available.

Working pressure	0,6 MPa
Min. pressure	0,15 MPa
Max. pressure	1,0 MPa
Temp. range	-20°C to +80°C *
Working medium	modified compressed air

*) values are valid for standard gaskets

Piston diameter [mm]	63	80	100	125	160	200	250	320
Thrust at 0,6 MPa [N] for double tandem	3552	5737	9130	14243	23373	36945	57726	94639
Return force at 0,6 MPa [N] for double tandem	3363	5442	8835	13761	22618	36192	56548	92769
Thrust at 0,6 MPa [N] for triple tandem	5234	8458	13548	21124	34682	55041	86002	141023
Return force at 0,6 MPa [N] for triple tandem	5045	8164	13253	20641	33927	54288	84823	139153
Connection	G3/8“	G3/8“	G1/2“	G1/2“	G3/4“	G3/4“	G1“	G1“
Length of adjustable cushioning [mm]	16	20	25	25	32	32	36	48
Max. stroke [mm] *	500*	1000*	1000*	1000*	1000*	1000*	1000*	1000*
Weight 0 mm stroke [kg] for double tandem	2,83	5,5	7,2	12,7	26,1	37,3	52,5	105,0
Weight add. per 1 mm stroke [kg] for double tandem	0,010	0,014	0,020	0,026	0,044	0,054	0,060	0,120
Weight 0 mm stroke [kg] for triple tandem	4,00	8,2	10,2	17,8	38,9	54,1	76,0	140,0
Weight add. per 1 mm stroke [kg] for triple tandem	0,014	0,019	0,029	0,036	0,060	0,078	0,086	0,175

*) Stroke of cylinder may be longer after agreement with our technical dept.

Order codes

10122 60 00 160 0100

Type	
10122	double tandem, double acting
10123	triple tandem, double acting

Equipment	
00	w/o cushioning, w/o magnet
05	double ended piston rod, w/o cushioning, w/o magnet
10	w/o cushioning, with magnet
15	double ended piston rod, w/o cushioning, with magnet
50	with cushioning, w/o magnet
55	double ended piston rod, with cushioning, w/o magnet
60	with cushioning, with magnet
65	double ended piston rod, with cushioning, with magnet

Options	
00	without options
10	Viton® piston rod sealing
11	Viton® gaskets (up to 180°C)
13*	tie rod version
14	1.4301 stainless steel piston rod
16	steel parts from stainless 1.4301 piston rod stainless 1.4401
37	composite round tube+opt. 10 and 16

*) For piston dia. 63 to 100 incl.

Piston diameter	
063	63 mm
080	80 mm
100	100 mm
125	125 mm
160	160 mm
200	200 mm
250	250 mm
320	320 mm

For more options regarding materials or dimensions, please contact our technical dept.

Stroke / Repair kit	
xxxx	mm of stroke e.g.: 0100 = stroke 100 mm
9999	repair kit

Construction / materials

- caps: drawn dural profile, anodised, piston dia. 100 and more: aluminium casting, anodised
- centre part: drawn dural profile, anodized
- body: drawn dural profile, anodized, piston dia. 125 and more: drawn dural tube, anodized
- piston rod: grounded round steel bar CK45 with hard chrome plated surface

Dimensions

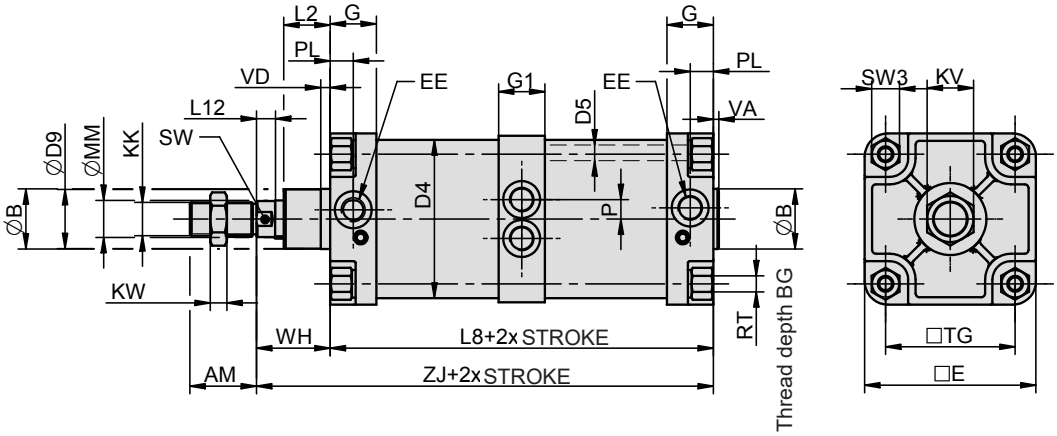

∅	AM	B	BG	D4	D5	D9	E	EE	G	G1	KK	KV	KW	L2	L8*	L8**	L12	MM	P	PL	RT	SW	SW3	TG	VA	VD	WH	ZJ*	ZJ**
63	32	45	17	68	8	44	75	G3/8“	30	26	M16x1,5	24	8	23	208*	295**	10	20	6	16	M8	16	14	56,5	4	5	37	245*	332**
80	40	45	19	86	10	44	95	G3/8“	30	30	M20x1,5	30	9	31	226*	324**	10	25	16	16	M10	21	17	72	4	5	46	272*	370**
100	40	55	19	106	10	54	115	G1/2“	36	36	M20x1,5	30	9	34	240*	342**	10	25	16	18	M10	21	17	89	4	17	51	291*	393**
125	54	60	20	132	12	58	140	G1/2“	40	32	M27x2	41	12	50	272*	384**	14	32	16	22	M12	27	22	110	6	6	65	337*	449**
160	72	65	24	171	16	64	185	G3/4“	50	50	M36x2	50	14	50	314*	446**	20	40	21	25	M16	36	30	140	6	10	80	394*	526**
200	72	75	24	210	16	74	235	G3/4“	50	50	M36x2	50	14	55	310*	440**	20	40	25	25	M16	36	30	175	6	20	95	405*	535**
250	84	90	30	262	20	84	270	G1“	54	54	M42x2	65	21	76	346*	492**	22	50	32	32	M20	46	36	220	10	10	105	451*	597**
320	96	110	30	340	24	100	350	G1“	57	57	M48x2	75	24	85	383*	546**	27	63	23	32	M24	55	41	270	10	35	120	503*	666**

*) Values are valid for double tandem
**) Values are valid for triple tandem

Mounting accessories

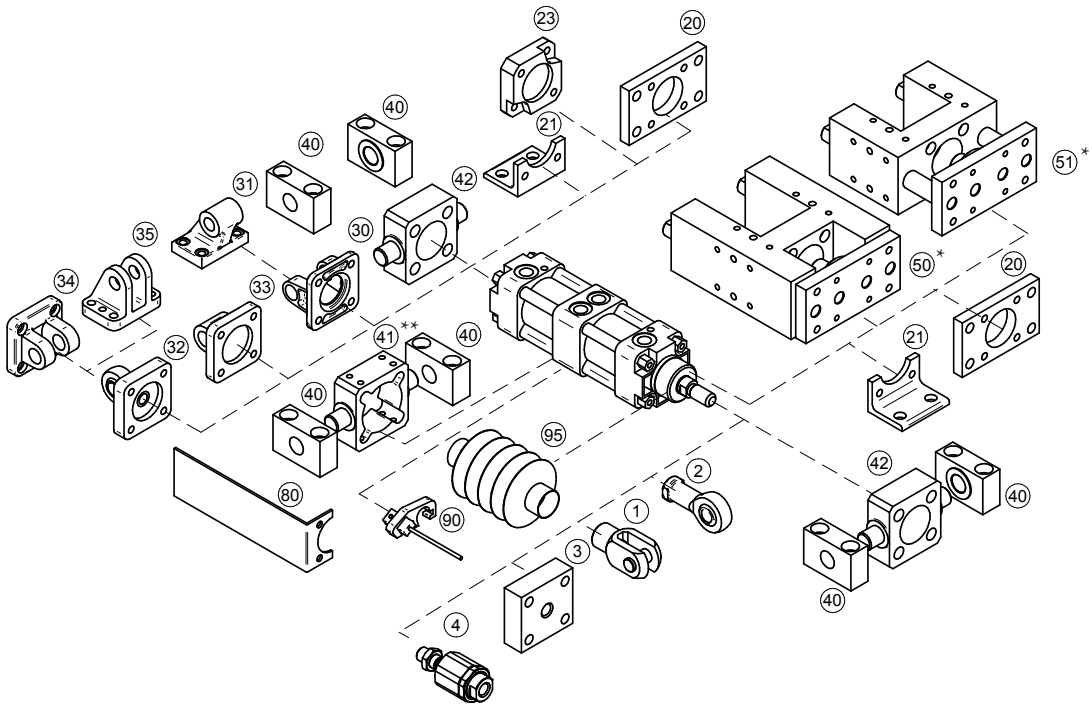

Mounting accessories	... see page
1 Piston rod clevis	... 4-2
2 Piston rod eye	... 4-3
3 Flanged piston rod coupling	... 4-2
4 Self-aligning piston rod coupling	... 4-3
20 Flange mounting	... 4-5
21 Foot mounting	... 4-5
23 Boxer flange mounting	... 4-6
30 Swivel flange	... 4-7
31 Clevis foot mounting	... 4-7
32 Swivel flange with spherical bearing	... 4-8
33 Swivel flange	... 4-8
34 Narrow swivel flange	... 4-9
35 Rectangular swivel flange	... 4-9
40 Trunnion mounting	... 4-10
41 Pivot pin**	... 4-11
42 Pivot pin to front/end cap	... 4-12
50 Guide unit H with ball bearings*	... 4-13
51 Guide unit with slide bearings*	... 4-15
80 Valve bracket	... 4-12
90 Prox. switch	... 3-2, 3-4, 3-7
95 Piston rod protective cover	... 4-4

*) When guide unit H or U is used on cylinder with magnetic piston, it is necessary to use cylinder with tie rod version (option No. 13).
There is no free space to mount switch bracket near the front cap when the profile tube is used (position for extend piston rod).
**) Type of pivot pin should be selected accordingly to the cylinder profile/tube - with cutout for profile or for round tube.

DOUBLE ACTING PNEUMATIC CYLINDERS ISO 21287 COMPACT

STRÁNSKÝ A PETRŽÍK

1

Compact cylinders are smaller than standard cylinders and they are suitable especially, when there isn't enough space for standard cylinder. Dimensions of mounting holes meets international standards ISO 6431, VDMA 24562 and NF E 49003.1, that is why standard mounting accessories can be used. There are bumpers in both end positions or fully adjustable cushioning at end of stroke.

Working pressure	0,6 MPa
Min. pressure	0,15 MPa
Max. pressure	1,0 MPa
Temp. range	-20°C to +80°C *
Working medium	modified compressed air

*) values are valid for standard gaskets

Piston diameter [mm]	25	32	40	50	63	80	100
Thrust at 0,6 MPa [N]	295	482	754	1178	1870	3015	4713
Thrust at 0,6 MPa [N] with double ended piston rod	248	415	662	1025	1717	2720	4484
Return force at 0,6 MPa [N]	248	415	662	1025	1717	2720	4484
Connection	M5	G1/8“	G1/8“	G1/8“	G1/8“	G1/8“	G1/8“
Length of adjustable cushioning [mm]	7	10	10	10	10	12	12
Max. stroke [mm] *	100*	150*	150*	200*	200*	200*	200*
Weight 0 mm stroke [kg]	0,21	0,24	0,34	0,50	0,72	1,20	1,89
Weight add. per 1 mm stroke [kg]	0,0027	0,0020	0,0034	0,0047	0,0055	0,0076	0,0095
Weight 0 mm stroke [kg] with double ended piston rod	0,23	0,28	0,36	0,55	0,76	1,30	2,07
Weight add. per 1 mm stroke [kg] with dbl. ended piston rod	0,0033	0,0040	0,0044	0,0065	0,0067	0,0103	0,0131

*) Stroke of cylinder may be longer after agreement with our technical dept.

Order codes

12101 10 00 050 0100

Type	
12101	ISO 21287 compact, double acting

Equipment	
00	w/o cushioning, w/o magnet, external thread
01	w/o cushioning, w/o magnet, internal thread
05	w/o cushioning, with double ended piston rod, w/o magnet, external thread
06	w/o cushioning, with double ended piston rod, w/o magnet,internal thread
10	w/o cushioning, with magnet, external thread
11	w/o cushioning, with magnet, internal thread
15	w/o cushioning, with double ended piston rod, with magnet, external thread
16	w/o cushioning, with double ended piston rod, with magnet, internal thread

Equipment	
50	with cushioning, w/o magnet, external thread
51	with cushioning, w/o magnet, internal thread
60	with cushioning, with magnet, external thread
61	with cushioning, with magnet, internal thread

Options	
00	without options
10	Viton® piston rod sealing
14	1.4301 stainless steel piston rod
16	steel parts from stainless 1.4301 piston rod stainless 1.4401

For more options regarding materials or dimensions, please contact our technical dept.

Piston diameter	
025	25 mm
032	32 mm
040	40 mm
050	50 mm
063	63 mm
080	80 mm
100	100 mm

Stroke / Repair kit	
xxxx	mm of stroke e.g.: 0100 = stroke 100 mm
9999	repair kit

Construction / materials

- caps: drawn dural profile, anodized
- body: drawn dural profile, anodized
- piston rod: grounded round steel bar CK45 with hard chrome plated surface

Dimensions

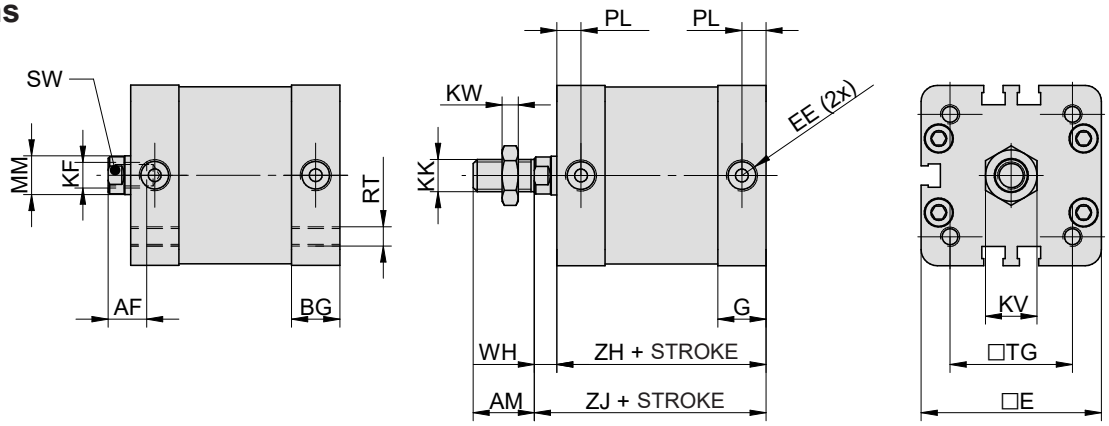

Double ended piston rod: other dimensions are the same as standard type)

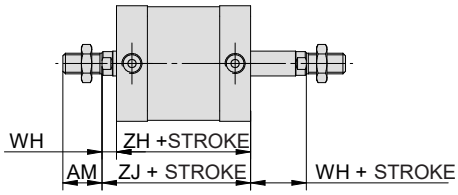

∅	AF	AM	BG	E	EE	G	KF	KK	KV	KW	MM	PL	RT	SW	TG	WH	ZH	ZJ
25	10	16	15	41	M5	12	M6	M8	13	4	10	6	M5	8	26	6	39	45
32	12	19	14.5	49.2	G1/8“	14.5	M8	M10x1.25	16	5	12	7.5	M6	10	32.5	7	44	51
40	12	19	15	56	G1/8“	15	M8	M10x1.25	16	5	12	7.5	M6	10	38	7	45	52
50	16	22	15	69	G1/8“	15	M10	M12x1.25	18	6	16	7.5	M8	13	46.5	8	45	53
63	16	22	15	79	G1/8“	15	M10	M12x1.25	18	6	16	7.5	M8	13	56.5	8	49	57
80	20	28	17	95	G1/8“	17	M12	M16x1.5	24	8	20	7.5	M10	16	72	10	54	64
100	20	28	20	115.5	G1/8“	20	M12	M16x1.5	24	8	20	7.5	M10	16	89	10	67	77

Mounting accessories

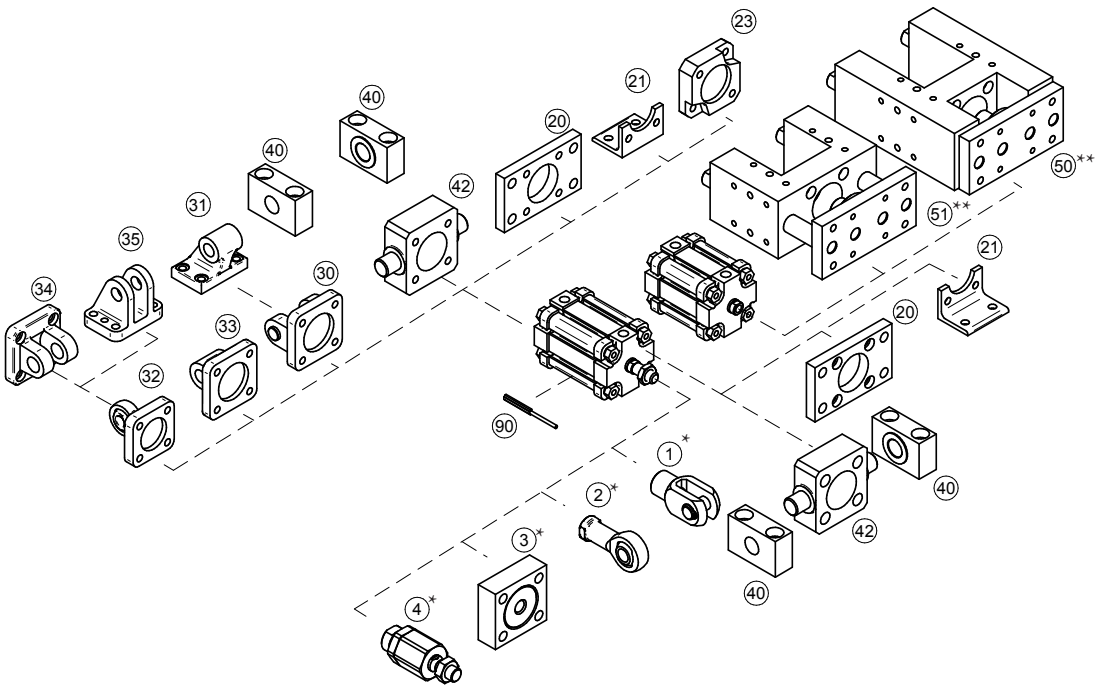

Mounting accessories	... see page
1 Piston rod clevis*	... 4-2
2 Piston rod eye*	... 4-3
3 Flanged piston rod coupling*	... 4-2
4 Self-aligning piston rod coupling*	... 4-3
20 Flange mounting	... 4-5
21 Foot mounting	... 4-5
23 Boxer flange mounting	... 4-6
30 Swivel flange	... 4-7
31 Clevis foot mounting	... 4-7
32 Swivel flange with spherical bearing	... 4-8
33 Swivel flange	... 4-8
34 Narrow swivel flange	... 4-9
35 Rectangular swivel flange	... 4-9
40 Trunnion mounting	... 4-10
42 Pivot pin to front/end cap	... 4-12
50 Guide unit H with ball bearings	... 4-13
51 Guide unit with slide bearings	... 4-15
90 Prox. switch	... 3-2, 3-4
90 Proportional position sensor with analog output	... 3-6

*) Please check dimensions of thread on cylinder and accessories for piston rod, before you order it (for example: compact cylinder piston dia. 40 mm has thread M10x1,25 on piston rod, piston rod clevis for cylinder dia. 40 has thread M12x1,25, so it is necessary to order piston rod clevis for cylinder dia. 25/32, where is thread M10x1,25).

**) For use this cylinder type with guide unit, the cylinder must be equipped with internal thread on piston rod.

DOUBLE ACTING PNEUMATIC CYLINDERS CNOMO 06.07.02

STRÁNSKÝ A PETRŽÍK

1

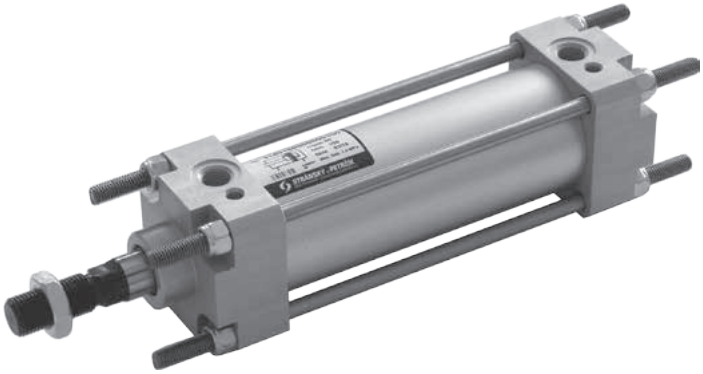

Cylinders are designed to meet the specifications of international standard CETOP. Fully adjustable cushioning at end of stroke and magnetic piston for proximity sensing are available. Another materials of components and seals are available on request.
We recommend to use cylinders to ISO 15552 and VDMA 24562 for new designs.

Working pressure	0,6 MPa
Min. pressure	0,15 MPa
Max. pressure	1,0 MPa
Temp. range	-20°C to +80°C *
Working medium	modified compressed air

*) values are valid for standard gaskets

Piston diameter [mm]	25	32	40	50	63	80	100	125	160	200
Thrust at 0.6 MPa [N]	295	482	754	1178	1870	3015	4713	7363	12064	18849
Thrust at 0.6 MPa [N] with double ended piston rod	226	415	633	990	1682	2720	4418	6880	11581	18096
Return force at 0.6 MPa [N]	226	415	633	990	1682	2720	4418	6880	11581	18096
Connection	G1/8“	G1/8“	G1/4“	G1/4“	G3/8“	G3/8“	G1/2“	G1/2“	G3/4“	G3/4“
Length of adjustable cushioning [mm]	9	12	11	11	16	9	16	15	20	20
Max. stroke [mm] *	500*	1000*	1000*	1000*	1000*	1500*	1500*	2000*	2000*	2000*
Weight 0 mm stroke [kg]	0,42	0.44	0.91	1.36	2.07	3.25	5.10	7.70	16.50	23.10
Weight add. per 1 mm stroke [kg]	0,003	0.003	0.004	0.005	0.006	0.007	0.012	0.013	0.023	0.027
Weight 0 mm stroke [kg] with double ended piston rod	0,48	0.55	1.03	1.77	2.74	4.31	6.65	10.80	19.79	27.33
Weight add. per 1 mm stroke [kg] with double ended piston rod	0,004	0.004	0.006	0.007	0.009	0.010	0.017	0.018	0.033	0.037

*) Stroke of cylinder may be longer after agreement with our technical dept.

Order codes

11401 60 00 050 0100

Type	
11401	CNOMO 06.07.02, double acting

Equipment	
00	w/o cushioning, w/o magnet
05	with double ended piston rod, w/o cushioning, w/o magnet
10	w/o cushioning, with magnet
15	with double ended piston rod, w/o cushioning, with magnet
50	with cushioning, w/o magnet
55	with double ended piston rod, with cushioning, w/o magnet
60	with cushioning, with magnet
65	with double ended piston rod, with cushioning, with magnet

Options	
00	without options
10	Viton® piston rod sealing
11	Viton® gaskets (up to 180°C)
14	1.4301 stainless steel piston rod
16	steel parts from stainless 1.4301 piston rod stainless 1.4401
37	composite round tube+opt. 10 and 16
39	round steel tube

For more options regarding materials or dimensions, please contact our technical dept.

Piston diameter	
025	25 mm
032	32 mm
040	40 mm
050	50 mm
063	63 mm
080	80 mm
100	100 mm
125	125 mm
160	160 mm
200	200 mm

Stroke / Repair kit	
xxxx	mm of stroke e.g.: 0100 = stroke 100 mm
9999	repair kit

Construction / materials

- caps: drawn aluminium alloy profile
- body: drawn dural tube, anodized
- piston rod: grounded round steel bar CK45 with hard chrome plated surface

Dimensions

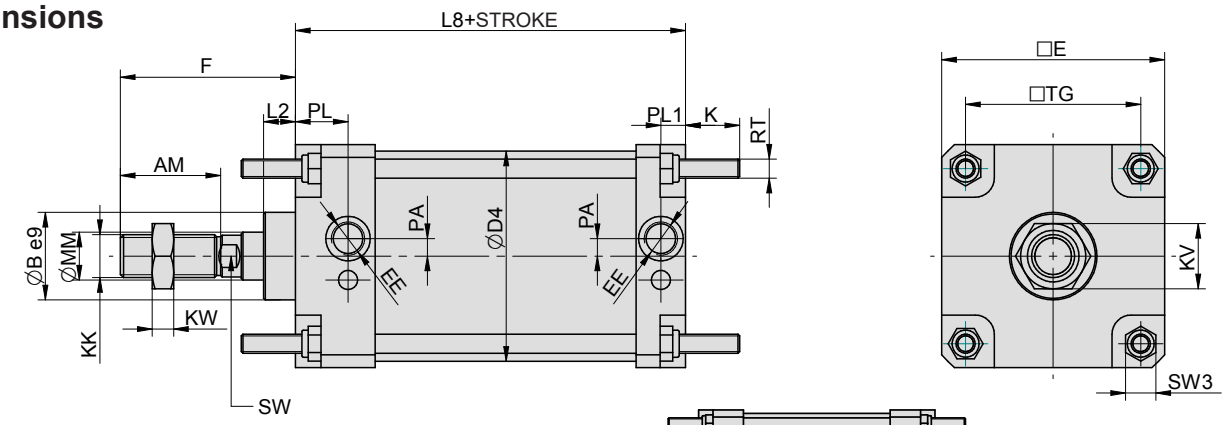

Double ended piston rod: other dimensions are the same as standard type)

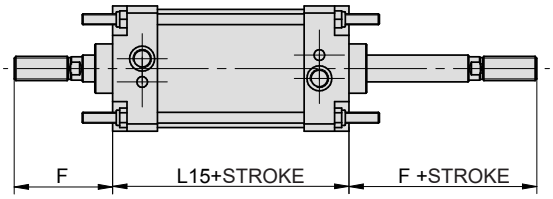

∅	AM	B	D4	E	EE	F	K	KK	KV	KW	L2	L8	L15	MM	PA	PL	PL1	RT	SW	SW3	TG
25	20	25	30	40	G1/8“	45	17	M10	10	5	15	105	115	12	3,5	14	14	M6	10	10	28
32	20	25	36	45	G1/8“	45	17	M10	16	5	15	80	90	12	2	21.5	11.5	M6	8	10	33
40	36	32	45	52	G1/4“	70	17	M16x1.5	24	8	15	110	129	18	5	34	15	M6	13	10	40
50	36	32	55	65	G1/4“	70	23	M16x1.5	24	8	15	110	129	18	3	33.5	14.5	M8	13	13	49
63	46	45	68	75	G3/8“	85	23	M20x1.5	30	10	20	125	146	22	10	34	13	M8	17	13	59
80	46	45	86	95	G3/8“	85	28	M20x1.5	30	10	20	125	146	22	10	34	13	M10	17	17	75
100	63	55	106	115	G1/2“	110	28	M27x2	41	13.5	20	145	164	30	11	31	15	M10	22	17	90
125	63	55	132	140	G1/2“	110	34	M27x2	41	13.5	20	145	164	30	11	33	15.5	M12	22	19	110
160	85	65	167	180	G3/4“	135	42	M36x2	50	18	25	180	200	40	11	37	20	M16	32	24	140
200	85	65	210	220	G3/4“	135	42	M36x2	50	18	25	180	200	40	11	37	20	M16	32	24	175

Mounting accessories

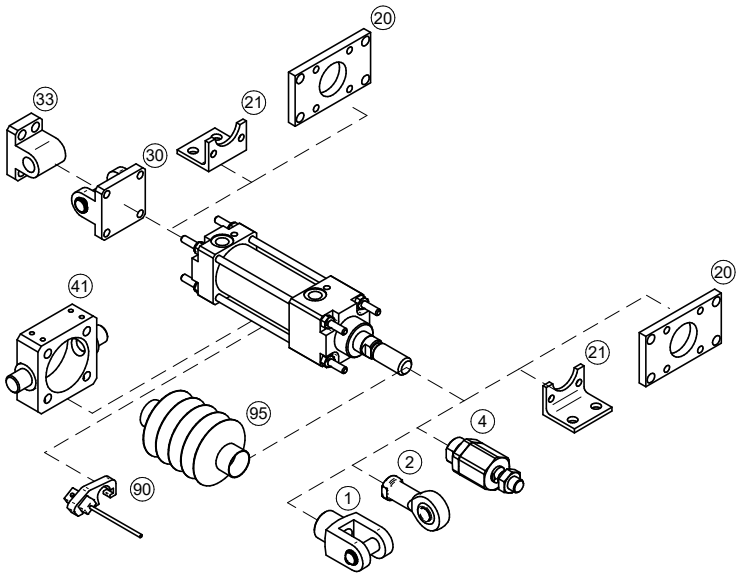

Mounting accessories	... see page
1 Piston rod clevis	... 4-17
2 Piston rod eye	... 4-3
4 Self-align. piston rod coupl.	... 4-3
20 Flange mounting	... 4-17
21 Foot mounting	... 4-18
30 Swivel flange	... 4-18
33 Swivel flange	... 4-19
41 Pivot pin	... 4-19
90 Prox. switch	... 3-2, 3-4
95 Piston rod protective cover	... 4-4

DOUBLE ACTING PNEUMATIC CYLINDERS DIN ISO 6432

STRÁNSKÝ A PETRŽÍK

Cylinders are designed to meet the specifications of international standard ISO 6432. The cylinders can work in higher temperatures by request. There is no cushioning at the end of stroke.

1

Working pressure	0,6 MPa
Min. pressure	0,15 MPa
Max. pressure	1,0 MPa
Temp. range	-20°C to +80°C *
Working medium	modified compressed air

*) values are valid for standard gaskets

Piston diameter [mm]	12	16
Thrust at 0,6 MPa [N]	66	121
Thrust at 0,6 MPa [N] with double ended piston rod	50	102
Return force at 0,6 MPa [N]	50	102
Connection	M5	M5
Max. stroke [mm] *	300*	300*
Weight 0 mm stroke [kg]	0,06	0,07
Weight add. per 1 mm stroke [kg]	0,0005	0,0008
Weight 0 mm stroke [kg] with double ended piston rod	0,06	0,07
Weight add. per 1 mm stroke [kg] with dbl. ended piston rod	0,0006	0,0009

*) Stroke of cylinder may be longer after agreement with our technical dept.

Order codes

11001 00 00 016 0050

Type	
11001	to DIN ISO 6432, double acting

Equipment	
00	w/o cushioning, w/o magnet
05	with double ended piston rod, w/o cushioning, w/o magnet
10	w/o cushioning, with magnet
15	with double ended piston rod, w/o cushioning, with magnet

Options	
00	without options
10	Viton® piston rod sealing
11	Viton® gaskets (up to 180°C)
14	1.4301 stainless steel piston rod
16	steel parts from stainless 1.4301 piston rod stainless 1.4401

For more options regarding materials or dimensions, please contact our technical dept.

Piston diameter	
012	12 mm
016	16 mm

Stroke / Repair kit	
xxxx	mm of stroke e.g.: 0050 = stroke 50 mm
9999	repair kit

Construction / materials

- caps: anodized dural
- body: drawn dural tube, anodized
- piston rod: grounded round steel bar CK45 with hard chrome plated surface

Dimensions

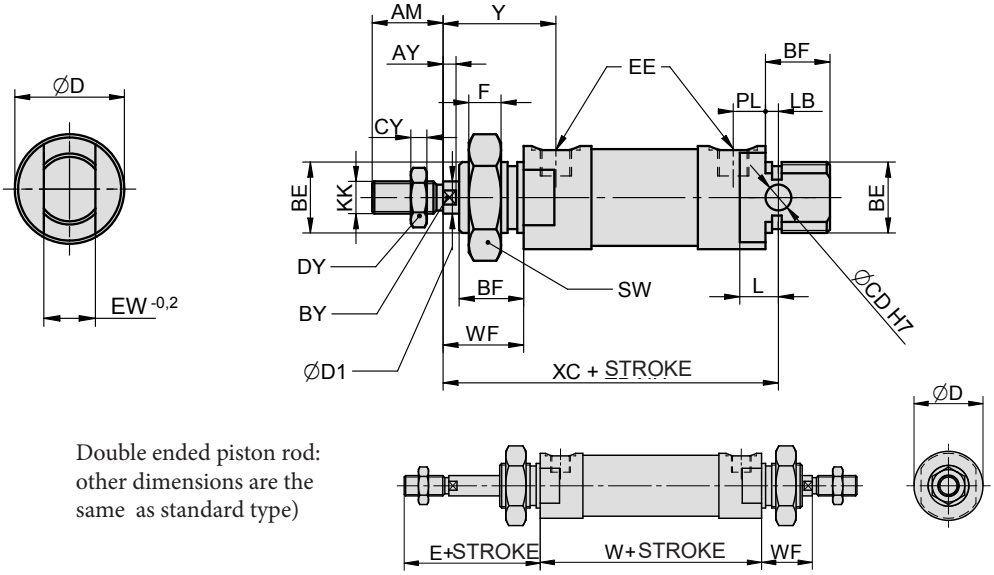

Double ended piston rod: other dimensions are the same as standard type)

Ø	AM	AY	BE	BF	BY	CD	CY	D	D1	DY	E	EE	EW	F	KK	L	LB	PL	SW	WF	XC	Y	W
12	16	3	M16x1,5	15	5	6	3	22	6	10	36	M5	12	8	M6	10	4	5	24	20	75	25	45
16	16	3	M16x1,5	15	5	6	3	25	6	10	36	M5	12	8	M6	11	5	5	24	20	82	25	50

Mounting accessories

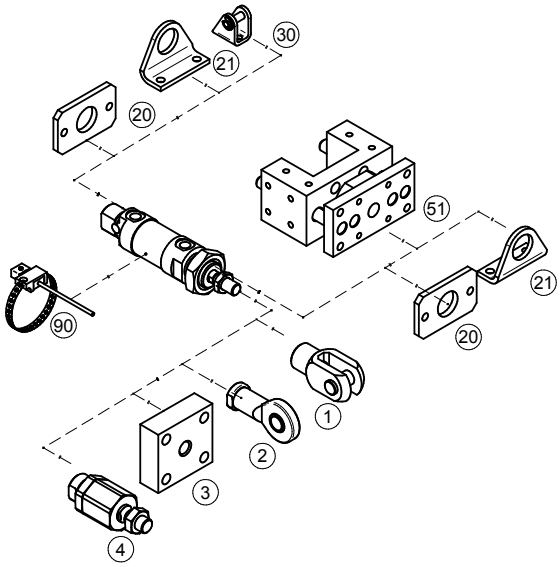

Mounting accessories	... see page
1 Piston rod clevis	... 4-2
2 Piston rod eye	... 4-3
3 Flanged piston rod coupling	... 4-2
4 Self-aligning piston rod coupling	... 4-3
20 Flange mounting	... 4-20
21 Foot mounting	... 4-20
30 Swivel flange	... 4-20
51 Guide unit with slide bearings	... 4-22
90 Prox. switch	... 3-2, 3-4

DOUBLE ACTING PNEUMATIC CYLINDERS DIN ISO 6432

STRÁNSKÝ A PETRŽÍK

Cylinders are designed to meet the specifications of international standard ISO 6432. The cylinders can work in higher temperatures by request. Fully adjustable cushioning at end of stroke is available.

Working pressure	0,6 MPa
Min. pressure	0,15 MPa
Max. pressure	1,0 MPa
Temp. range	-20°C to +80°C *
Working medium	modified compressed air

*) values are valid for standard gaskets

Piston diameter [mm]	20	25
Thrust at 0,6 MPa [N]	188	295
Thrust at 0,6 MPa [N] with double ended piston rod	158	248
Return force at 0,6 MPa [N]	158	248
Connection	G1/8“	G1/8“
Length of adjustable cushioning [mm]	11	9
Max. stroke [mm] *	300*	500*
Weight 0 mm stroke [kg]	0,17	0,22
Weight add. per 1 mm stroke [kg]	0,0010	0,0013
Weight 0 mm stroke [kg] with double ended piston rod	0,20	0,30
Weight add. per 1 mm stroke [kg] with dbl. ended piston rod	0,0014	0,0020

*) Stroke of cylinder may be longer after agreement with our technical dept.

Order codes

11101 60 00 020 0100

Type	
11101	to DIN ISO 6432, double acting

Equipment	
00	w/o cushioning, w/o magnet
05	with double ended piston rod, w/o cushioning, w/o magnet
10	w/o cushioning, with magnet
15	with double ended piston rod, w/o cushioning, with magnet
50	with cushioning, w/o magnet
55	with double ended piston rod, with cushioning, w/o magnet
60	with cushioning, with magnet
65	with double ended piston rod, with cushioning, with magnet

Options	
00	without options
10	Viton® piston rod sealing
11*	Viton® gaskets (up to 180°C)
14	1.4301 stainless steel piston rod
16	steel parts from stainless 1.4301 piston rod stainless 1.4401

*) This option in combination with magnetic piston causes different dimensions - please contact our technical dept.

For more options regarding materials or dimensions, please contact our technical dept.

Piston diameter	
020	20 mm
025	25 mm

Stroke / Repair kit	
xxxx	mm of stroke e.g.: 0100 = stroke 100 mm
9999	repair kit

Construction / materials

- caps: anodized dural
- body: drawn dural tube, anodized
- piston rod: grounded round steel bar CK45 with hard chrome plated surface

Dimensions

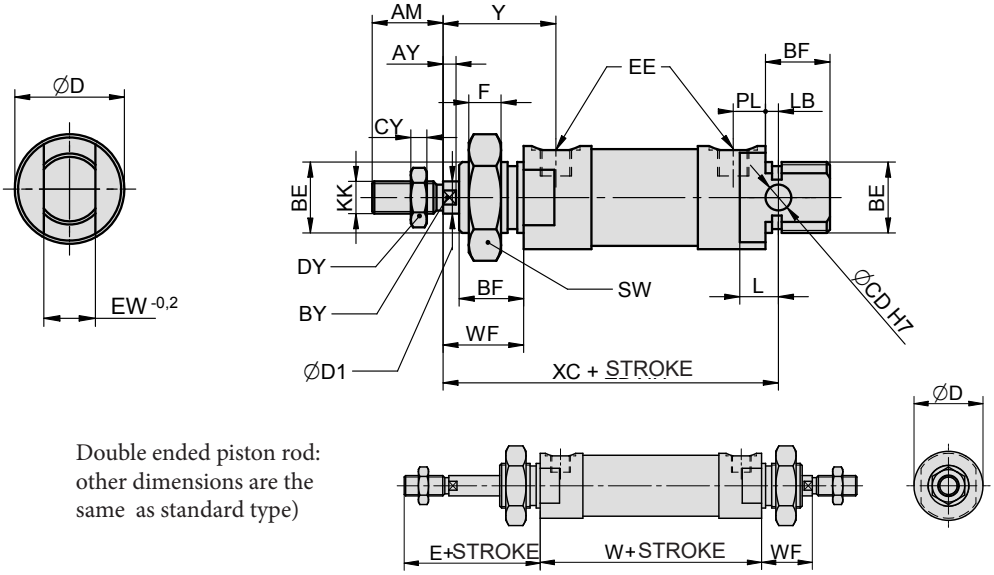

Double ended piston rod: other dimensions are the same as standard type)

Ø	AM	AY	BE	BF	BY	CD	CY	D	D1	DY	E	EE	EW	F	KK	L	LB	PL	SW	WF	XC	Y	W
20	20	4	M22x1,5	20	7	8	6	27,5	8	13	44,5	G1/8“	16	10	M8	12	3	9,5	34	24,5	95	34	67,5
25	22	4	M22x1,5	20	9	8	6	32	10	17	47	G1/8“	16	10	M10x1,25	12	4	10	34	25,5	104	35	75

Mounting accessories

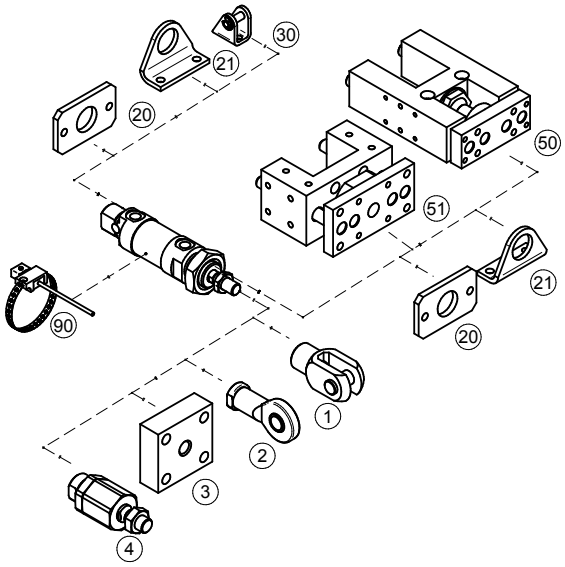

Mounting accessories	... see page
1 Piston rod clevis	... 4-2
2 Piston rod eye	... 4-3
3 Flanged piston rod coupling	... 4-2
4 Self-aligning piston rod coupling	... 4-3
20 Flange mounting	... 4-20
21 Foot mounting	... 4-20
30 Swivel flange	... 4-20
50 Guide unit H with ball bearings	... 4-21
51 Guide unit with slide bearings	... 4-22
90 Prox. switch	... 3-2, 3-4

DOUBLE ACTING PNEUMATIC CYLINDERS DIN ISO 6432 WITH PRESSED-IN TUBE

STRÁNSKÝ A PETRŽÍK

Cylinders are designed to meet the specifications of international standard ISO 6432. The cylinders can work in higher temperatures by request. Fully adjustable cushioning at end of stroke is available for diameters 20 and 25 mm, diameters 16 mm and less are without cushioning at the end of stroke. Cylinders with pressed-in tube can't be disassembled.

1

Working pressure	0,6 MPa
Min. pressure	0,15 MPa
Max. pressure	1,0 MPa
Temp. range	-20°C to +80°C *
Working medium	modified compressed air

*) values are valid for standard gaskets

Piston diameter [mm]	8	10	12	16	20	25
Thrust at 0.6 MPa [N]	30	47	66	121	188	295
Thrust at 0.6 MPa [N] with double ended piston rod	22	39	50	102	158	248
Return force at 0.6 MPa [N]	22	39	50	102	158	248
Connection	M5	M5	M5	M5	G1/8"	G1/8"
Length of adjustable cushioning [mm]	—	—	—	—	11	9
Max. stroke [mm] *	200*	200*	300*	300*	300*	500*
Weight 0 mm stroke [kg]	0.04	0.04	0.06	0.07	0.17	0.22
Weight add. per 1 mm stroke [kg]	0.0006	0.0006	0.0005	0.0008	0.0010	0.0013
Weight 0 mm stroke [kg] with double ended piston rod	0.04	0.04	0.06	0.07	0.20	0.30
Weight add. per 1 mm stroke [kg] with double ended piston rod	0.0006	0.0006	0.0006	0.0009	0.0014	0.0020

*) Stroke of cylinder may be longer after agreement with our technical dept.

Order codes

11201 60 00 020 0100

Type	
11201	to DIN ISO 6432, double acting, with pressed-in tube

Equipment	
00	w/o cushioning, w/o magnet
05	with double ended piston rod, w/o cushioning, w/o magnet
10[1)]	w/o cushioning, with magnet
15[1)]	with double ended piston rod, w/o cushioning, with magnet
50[2)]	with cushioning, w/o magnet
55[2)]	with double ended piston rod, with cushioning, w/o magnet
60[2)]	with cushioning, with magnet
65[2)]	with double ended piston rod, with cushioning, with magnet

Options	
00	without options
14	1.4301 stainless steel piston rod

For more options regarding materials or dimensions, please contact our technical dept.

Piston diameter	
008	8 mm
010	10 mm
012	12 mm
016	16 mm
020	20 mm
025	25 mm

Stroke	
xxxx	mm of stroke e.g.: 0100 = stroke 100 mm

1) For piston dia. 12 mm and more
2) For piston dia. 20 mm a and more

There is no repair kit for cylinders with pressed-in tube - these cylinders can't be disassembled

Construction / materials

- caps: anodized dural
- body: drawn stainless steel tube 1.4301
- piston rod: grounded round steel bar CK45 with hard chrome plated surface

Dimensions

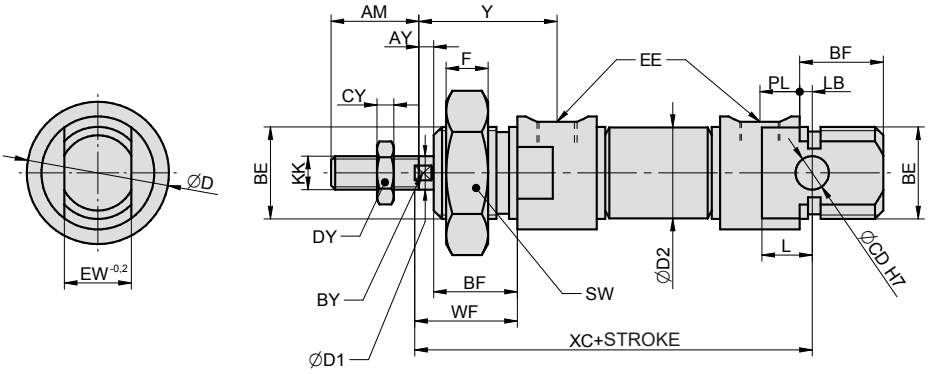

Double ended piston rod: other dimensions are the same as standard type)

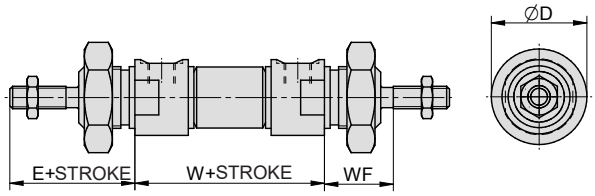

Ø	AM	AY	BE	BF	BY	CD	CY	D	D1	D2	DY	E	EE	EW	F	KK	L	LB	PL	SW	WF	XC	Y	W
8	12	3	M12x1.25	12	3	4	3	15	4	9.3	7	28	M5	8	7	M4	9	3	5	18	16	64	21	45
10	12	3	M12x1.25	12	3	4	3	15	4	11.3	7	28	M5	8	7	M4	9	3	5	18	16	64	21	45
12	16	3	M16x1.5	15	5	6	3	19	6	13.3	10	36	M5	12	8	M6	10	4	5	24	20	75	25	45
16	16	3	M16x1.5	15	5	6	3	20	6	17.3	10	36	M5	12	8	M6	11	5	5	24	20	82	25	50
20	20	4	M22x1.5	20	7	8	6	27	8	21.3	13	44.5	G1/8“	16	10	M8	12	3	9.5	34	24.5	95	34	67.5
25	22	4	M22x1.5	20	9	8	6	32	10	26.5	17	47	G1/8“	16	10	M10x1.25	12	4	10	34	25.5	104	35	75

Mounting accessories

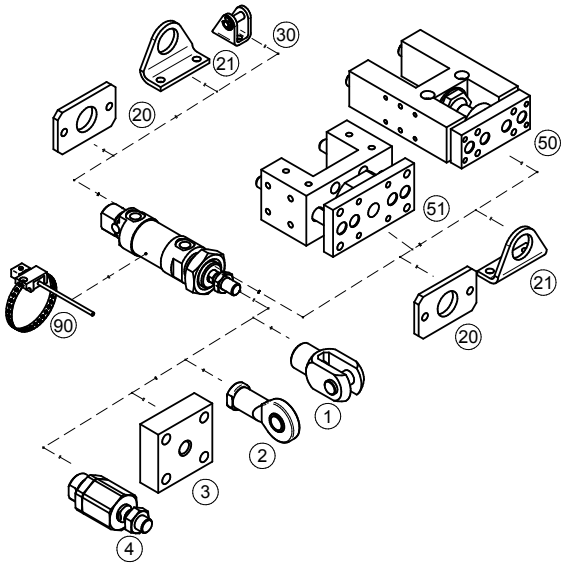

Mounting accessories	... see page
1 Piston rod clevis	... 4-2
2 Piston rod eye	... 4-3
3 Flanged piston rod coupling	... 4-2
4 Self-aligning piston rod coupling	... 4-3
20 Flange mounting	... 4-20
21 Foot mounting	... 4-20
30 Swivel flange	... 4-20
50 Guide unit H with ball bearings	... 4-21
51 Guide unit with slide bearings	... 4-22
90 Prox. switch	... 3-2, 3-4

DOUBLE ACTING PNEUMATIC CYLINDERS DIN ISO 6432 SERIES MCMIS STAINLESS STEEL

STRÁNSKÝ A PETRŽÍK

Cylinders are designed to meet the specifications of international standard ISO 6432. The cylinders are equipped with cushion pads or, from a piston diameter of 20 mm, they can have adjustable end position cushing. The cylinders are equipped with a magnetic piston as standard for contactless position sensing.

Working pressure	0,6 MPa
Min. pressure	0,1 MPa
Max. pressure	1,0 MPa
Temp. range	-35°C to +80°C *
Working medium	modified compressed air

*) values are valid for standard gaskets

Piston diameter [mm]	10	12	16	20	25
Thrust at 0,6 MPa [N]	42	61	109	170	265
Thrust at 0,6 MPa [N] with double ended piston rod	35	45	90	143	223
Return force at 0,6 MPa [N]	35	45	90	143	223
Connection	M5	M5	M5	G1/8“	G1/8“
Length of adjustable cushioning [mm]	-	-	-	18	21
Working speed [mm/s]	50 to 500				
Max. stroke [mm]	300	300	500	500	500
Weight 0 mm stroke [kg]	0,07	0,12	0,15	0,31	0,41
Weight add. per 1 mm stroke [kg]	0,0003	0,0004	0,0005	0,0008	0,0011
Weight 0 mm stroke [kg] with double ended piston rod	0,08	0,14	0,17	0,34	0,45
Weight add. per 1 mm stroke [kg] with dbl. ended piston rod	0,0005	0,0008	0,0009	0,0015	0,0021

Order codes

P MCMIS - 11 - 16 - 50 -A

Type	
11	with magnet
21	double ended piston rod, with magnet (only for ø 20 a 25)

Piston dia.	
10	10 mm
12	12 mm
16	16 mm
20	20 mm
25	25 mm

Stroke	
xxx	mm of stroke, e.g. 50 = stroke 50 mm - see allowed combination below

Piston ø [mm]	Standard stroke [mm]*
10, 12, 16	10, 25, 40, 50, 80, 100, 150, 200
20, 25	15, 25, 50, 75, 100, 150, 200

*) Other strokes are possible, please contact our technical department.

Cushioning	
	pads (unadjustable)
-A	adjustable cushioning (only for ø 20 a 25)

In case of proximity sensing request, please contact our technical department.

Construction / materials

- caps, tube, piston rod, needle valve, nuts: stainless steel SUS304
- piston: brass
- sealings: PU and NBR
- cushion axis: Al alloy
- bushing: copper alloy

Dimensions

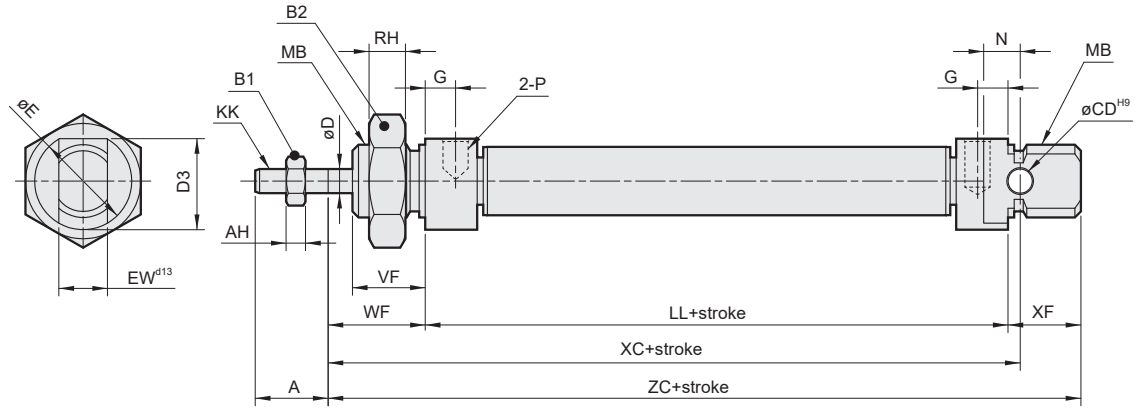

Double ended piston rod: other dimensions are the same as standard type)

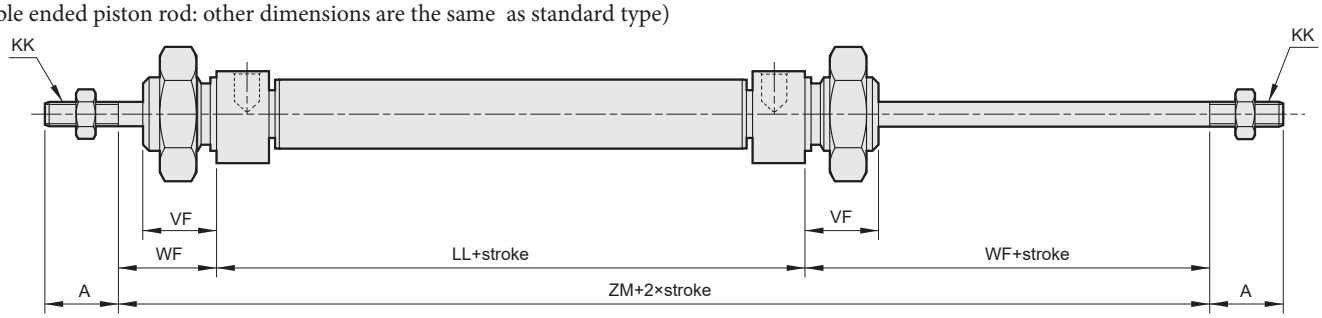

∅	A	AH	B1	B2	CD	D	D3	E	EW	G	KK	LL	MB	N	ND	P	RH	VF	WF	XC	XF	ZC	ZM
10	12	3,2	7	16	4	4	15	16	8	5	M4	46	M12x1,25	6	12	M5	6	12	16	64	12	74	-
12	16	4	10	22	6	6	18	19	12	5	M6	48	M16x1,5	9	16	M5	6	17	22	75	18	88	-
16	16	4	10	22	6	6	18	19	12	4,5	M6	53	M16x1,5	9	16	M5	6	18	22	82	18	93	-
20	20	5	13	27	8	8	25,5	27	16	8	M8	67	M22x1,5	12	22	G1/8“	6	20	24	95	20	111	115
25	22	6	17	27	8	10	28,5	30	16	8	M10x1,25	68	M22x1,5	12	22	G1/8“	6	22	28	104	22	118	124

Mounting accessories
(stainless steel)

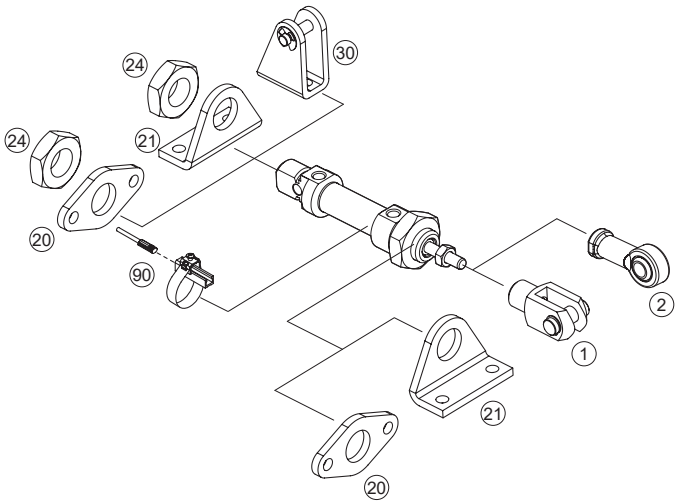

Mounting accessories	... see page
1 Piston rod clevis	... 4-22
2 Piston rod eye	... 4-23
20 Flange mounting	... 4-23
21 Foot mounting	... 4-24
24 Front/end cap nut	... 4-24
30 Swivel flange	... 4-24
90 Prox. switch	

DOUBLE ACTING PNEUMATIC CYLINDERS SERIES PDSW

STRÁNSKÝ A PETRŽÍK

This series of cylinders with fully adjustable cushioning at both ends and with magnetic piston for proximity switches, is direct replacement for cylinders of DSW series of other producers.

Working pressure	0,6 MPa
Min. pressure	0,15 MPa
Max. pressure	1,0 MPa
Temp. range	-20°C to +80°C *
Working medium	modified compressed air

*) values are valid for standard gaskets

Piston diameter [mm]	32	40	50	63
Thrust at 0.6 MPa [N]	482	754	1178	1870
Thrust at 0.6 MPa [N] with double ended piston rod	415	633	990	1682
Return force at 0.6 MPa [N]	415	633	990	1682
Connection	G1/8“	G1/4“	G1/4“	G3/8“
Length of adjustable cushioning [mm]	13	14	11	16
Max. stroke [mm] *	1000*	1000*	1000*	1000*
Weight 0 mm stroke [kg]	0.43	0.90	1.10	1.70
Weight add. per 1 mm stroke [kg]	0.0015	0.002	0.002	0.004
Weight 0 mm stroke [kg] with double ended piston rod	0.56	1.23	1.33	1.80
Weight add. per 1 mm stroke [kg] with dbl. ended piston rod	0.0024	0.004	0.004	0.0065

*) Stroke of cylinder may be longer after agreement with our technical dept.

Order codes

11301 60 00 050 0100

Type	
11301	double acting

Equipment	
60	with cushioning, with magnet
65	with double ended piston rod, with cushioning, with magnet

Options	
00	without options
14	1.4301 stainless steel piston rod

For more options regarding materials or dimensions, please contact our technical dept.

Piston diameter	
032	32 mm
040	40 mm
050	50 mm
063	63 mm

Stroke / Repair kit	
xxxx	mm of stroke e.g.: 0100 = stroke 100 mm
9999	repair kit

Construction / materials

- caps: anodized dural
- body: drawn dural tube, anodized
- piston rod: grounded round steel bar CK45 with hard chrome plated surface

Dimensions

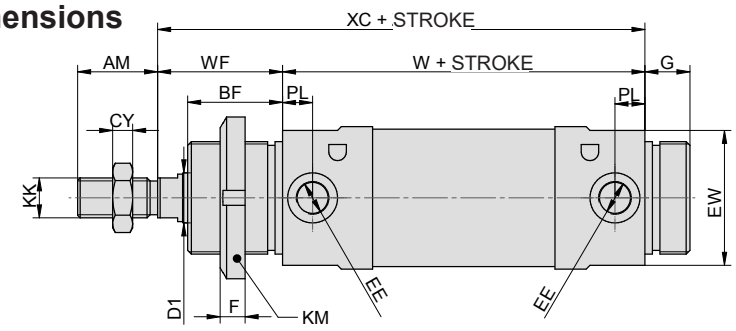

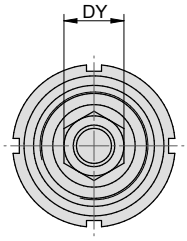

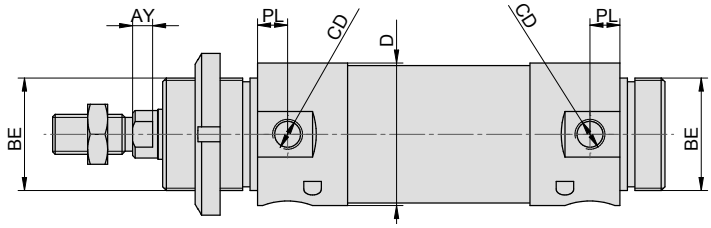

Double ended piston rod:
(other dimensions are the same as standard type)

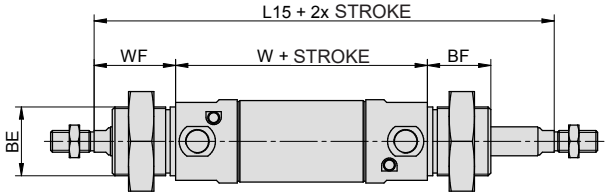

∅	AM	AY	BE	BF	BY	CD	CY	D	DY	D1	EE	EW	F	G	KK	KM	L15	PL	W	WF	XC	Y
32	20	4	M30x1.5	30	10	M8x1	5	38	16	12	G1/8"	35	7	14	M10	6	172	9	96	38	134	47
40	24	6.5	M38x1.5	35	12	M10x1	6	46	18	16	G1/4"	43	14	16	M12	M38x1.5	204	12	113	45	158	57
50	32	8	M45x1.5	38	16	M12x1.5	8	57	24	20	G1/4"	54	10	18	M16	9	220	12	120	50	170	62
63	32	8	M45x1.5	38	16	M14x1.5	8	70	24	20	G3/8"	67	10	18	M16	9	224	13	124	50	174	63

Mounting accessories

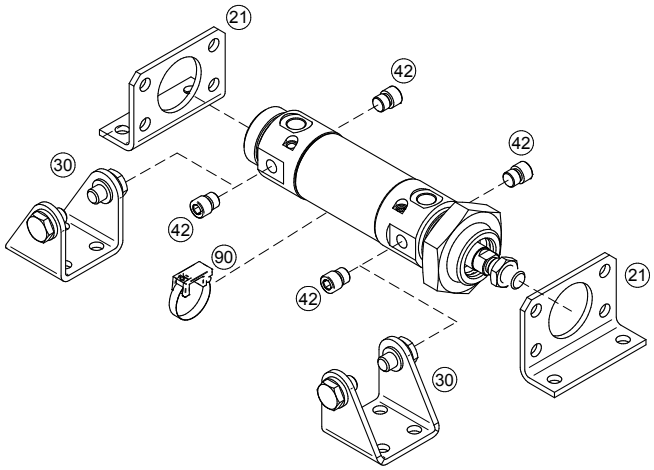

Mounting accessories	... see page
21 Foot mounting	... 4-25
30 Swivel flange	... 4-25
42 Socket screw	... 4-25
90 Proximity switch	... 3-2, 3-4

DOUBLE ACTING PNEUMATIC CYLINDERS ANTI-CORROSIVE - HYGIENIC CLEAN

STRÁNSKÝ A PETRŽÍK

Anti-corrosive cylinders are designed for use in area, where the hygienic clean is required (food processing or packing industry) or in aggressive chemical environment. The profile of the cylinder is smooth, to prevent dirt deposition. Fully adjustable cushioning at end of stroke is available as well as magnetic piston. Anti-corrosive cylinders are produced in several versions, for example: with thread on the front cap and with mounting holes on end cap, or with integrated swivel eye on end cap, and more. For using in food processing industry please choose appropriate option or contact our technical dept.

Working pressure	0,6 MPa
Min. pressure	0,15 MPa
Max. pressure	1,0 MPa
Temp. range	-20°C to +80°C *
Working medium	modified compressed air

*) values are valid for standard gaskets

Piston diameter [mm]	32	40	50	63	80	100
Thrust at 0.6 MPa [N]	482	754	1178	1870	3015	4713
Return force at 0.6 MPa [N]	415	633	990	1682	2720	4418
Connection	G1/8“	G1/4“	G1/4“	G3/8“	G3/8“	G3/8“
Length of adjustable cushioning [mm]	12	13	15	15	18	18
Max. stroke [mm] *	800*	800*	1000*	1000*	1000*	1200*
Weight 0 mm stroke of type 17101 (standard / double-ended piston rod) [kg]	0.66 / 0.72	1.13 / 1.34	1.70 / 1.94	2.97 / 3.00	5.14 / 5.66	8.04 / 8.51
Weight 0 mm stroke of type 17201 (standard) [kg]	0.77	1.29	2.05	3.77	6.43	10.73
Weight 0 mm stroke of type 17301 (standard / double-ended piston rod) [kg]	0.73 / 0.84	1.23 / 1.51	1.93 / 2.41	3.47 / 4.06	6.11 / 7.48	9.63 / 11.7
Weight 0 mm stroke of type 17401 (standard / double-ended piston rod) [kg]	0.73 / 0.84	1.23 / 1.51	1.93 / 2.41	3.47 / 4.06	6.11 / 7.48	9.63 / 11.7
Weight 0 mm stroke of type 17501 (standard / double-ended piston rod) [kg]	0.71 / 0.83	1.20 / 1.50	1.89 / 2.34	3.42 / 3.97	5.95 / 7.34	9.54 / 11.5
Weight 0 mm stroke of type 17601 (standard) [kg]	0.71	1.2	1.89	3.42	5.95	9.54
Weight 0 mm stroke of type 17701 (standard) [kg]	0.66	1.13	1.70	2.93	5.09	7.99
Weight add. per 1 mm stroke (all types, standard) [kg]	0.0025	0.0035	0.0050	0.0064	0.0098	0.0113
Weight add. per 1 mm stroke (all types, double-ended piston rod) [kg]	0.0035	0.0052	0.0075	0.0090	0.0138	0.0153

*) Stroke of cylinder may be longer after agreement with our technical dept.

Order codes

17101 60 00 050 0100

Type	
17101	with thread on front cap
17201	with integrated swivel eye
17301	with pins for trunnion mounting on front cap
17401	with pins for trunnion mounting on end cap
17501*	with threads for accessory mounting on front cap
17601	with threads for accessory mounting on end cap
17701	with thread on front cap and threads for accessory mounting on end cap

*) For piston dia. 50 mm and more

Equipment	
50	with cushioning, without magnet
55*	with double-ended piston rod with cushioning, without magnet
60	with cushioning, with magnet
65*	with double-ended piston rod with cushioning, with magnet

*) Not for type 17201, 17601 and 17701

Options	
00	without options
10	Viton® piston rod sealing
11	Viton® gaskets (up to 180°C)
31	for food processing industry (piston rod sealing from TPU and special grease)

For more options regarding materials or dimensions, please contact our technical dept.

Piston diameter	
032	32 mm
040	40 mm
050	50 mm
063	63 mm
080	80 mm
100	100 mm

Stroke / Repair kit	
xxxx	mm of stroke e.g.: 0100 = stroke 100 mm
9999	repair kit

Construction / materials

- caps: stainless steel 1.4571 (AISI 316)
- body: drawn stainless steel 1.4301 tube
- piston rod: stainless steel 1.4571 (AISI 316)
- sealing: NBR, wiping ring Viton®

Anti-corrosive cylinders according to VDMA 24562 - see page 1-4, option 05

Dimensions

Types 17101 and 17701:

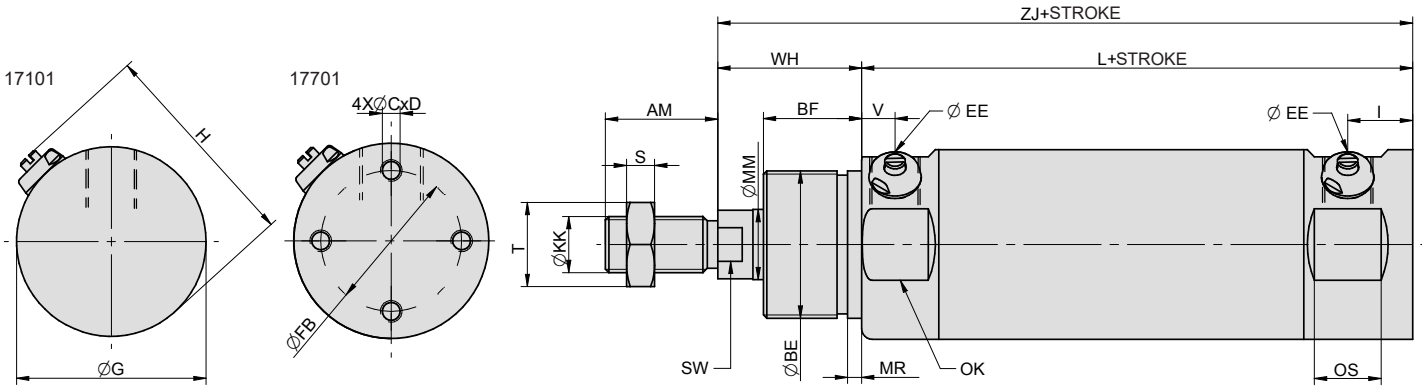

Double ended piston rod: other dimensions are the same as standard type)

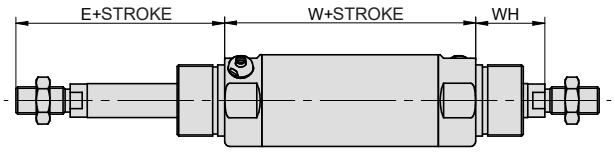

∅	AM	BE	BF	C	D	E	EE	FB	G	H	I	KK	L	MM	MR	OK	OS	S	SW	T	V	W	WH	ZJ
32	22	M30x1.5	22	M5	7	53	G1/8“	25	36	45	17.5	M10x1.25	92.5	12	2	33	16.5	5	10	17	10	84.5	31	123.5
40	24	M35x1.5	25	M6	8	58	G1/4“	30	44	53	18	M12x1.25	107	16	2	40	20	6	13	19	14	102.5	34	141
50	32	M42x1.5	28	M6	8	73	G1/4“	39	54	64	18.5	M16x1.5	107	20	2	50	19	8	17	24	10	98	41	148
63	32	M42x1.5	28	M8	8	73	G3/8“	49	68	78	23	M16x1.5	123	20	2	64	24	8	17	24	12	110	41	164
80	40	M50x2	28	M10	8.5	83.5	G3/8“	64	86	96	22	M20x1.5	136	25	2	82	24	10	21	30	18	135	43.5	179.5
100	40	M50x2	28	M10	10	84	G3/8“	82	106	116	24	M20x1.5	145	25	2	102	26	10	21	30	15	142	44	189

Type 17201:

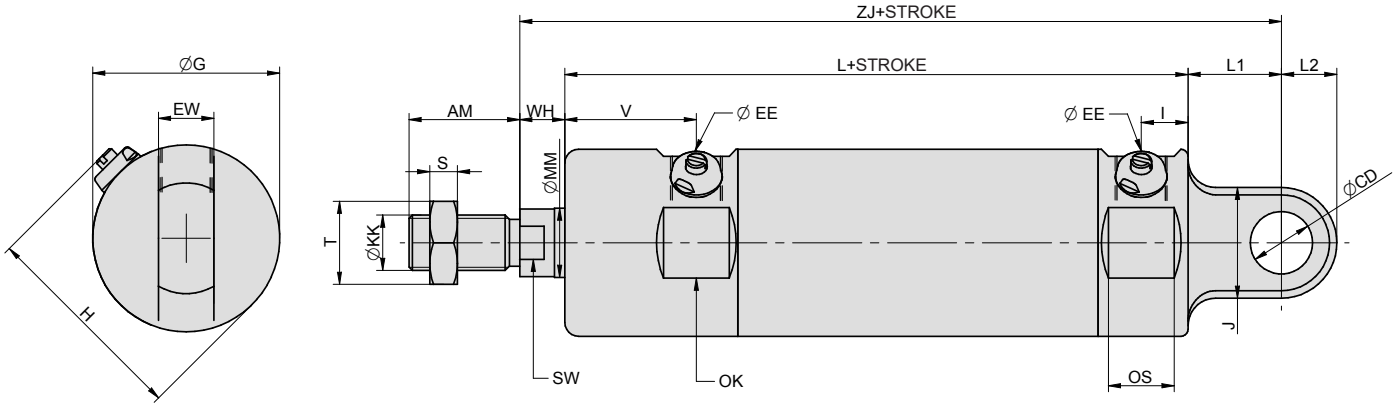

∅	AM	CD	EE	EW	G	H	I	J	KK	L	L1	L2	MM	OK	OS	S	SW	T	V	WH	ZJ
32	22	10	G1/8“	10	36	45	12	20	M10x1.25	109	24	10	12	33	16.5	5	10	17	32	9	142
40	24	12	G1/4“	12	44	53	14	24	M12x1.25	127	24	12	16	40	20	6	13	19	39	9	160
50	32	16	G1/4“	16	54	64	13.5	32	M16x1.5	130	27	16	20	50	19	8	17	24	38	13	170
63	32	16	G3/8“	16	68	78	22	32	M16x1.5	150	27	16	20	64	24	8	17	24	40	13	190
80	40	20	G3/8“	20	86	96	16.5	40	M20x1.5	158.5	36	20	25	82	24	10	21	30	46	15.5	210
100	40	20	G3/8“	20	106	116	27	40	M20x1.5	178	36	20	25	102	26	10	21	30	46	16	230

1

Type 17301:

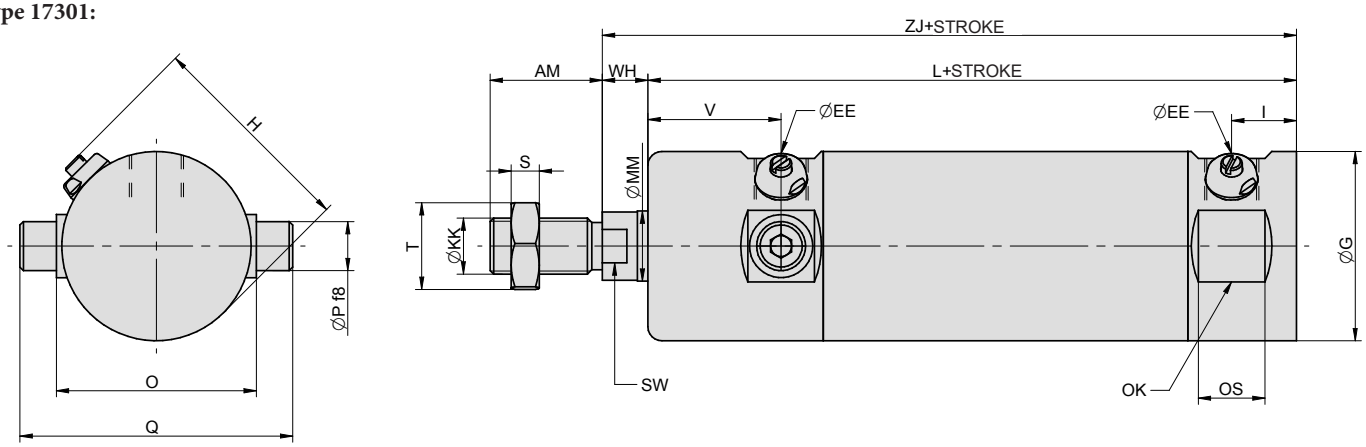

Type 17401:

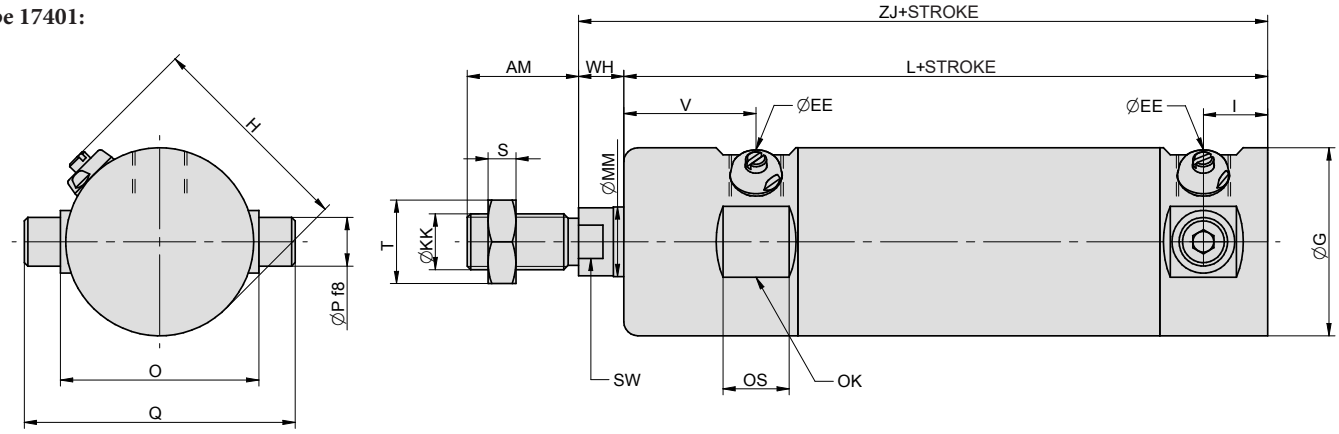

Double ended piston rod: other dimensions are the same as standard type) For both 17301 and 17401 types.

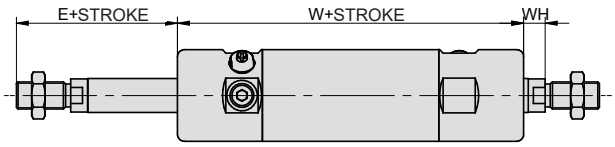

∅	AM	E	EE	G	H	I	KK	L	MM	O	OK	OS	P	Q	S	SW	T	V	W	WH	ZJ
32	22	31	G1/8“	36	45	17.5	M10x1.25	114.5	12	38	33	16.5	10	52.8	5	10	17	32	128.5	9	123.5
40	24	33	G1/4“	44	53	18	M12x1.25	132	16	46	40	20	12	63.8	6	13	19	39	152.5	9	141
50	32	45	G1/4“	54	64	18.5	M16x1.5	135	20	57	50	19	14	77.8	8	17	24	38	154	13	148
63	32	45	G3/8“	68	78	23	M16x1.5	151	20	70	64	24	16	93	8	17	24	40	166	13	164
80	40	55.5	G3/8“	86	96	22	M20x1.5	164	25	88	82	24	18	120	10	21	30	46	191	15.5	179.5
100	40	56	G3/8“	106	116	24	M20x1.5	173	25	109	102	26	20	147	10	21	30	46	198	16	189

Type 17501:

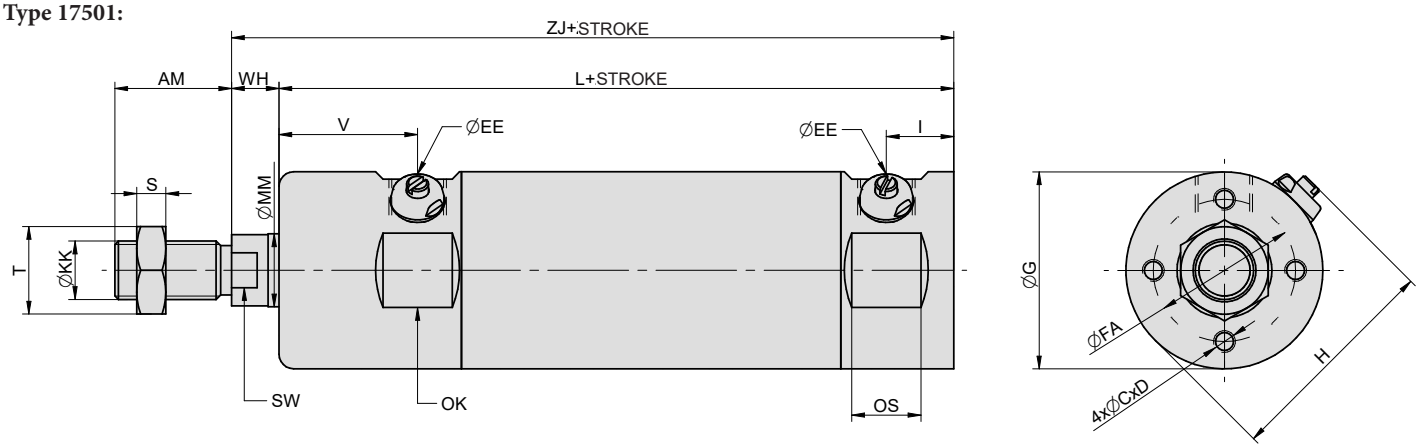

Double ended piston rod: other dimensions are the same as standard type) For type 17501 only.

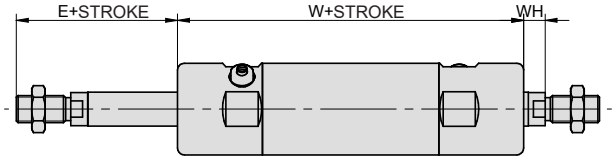

Type 17601:

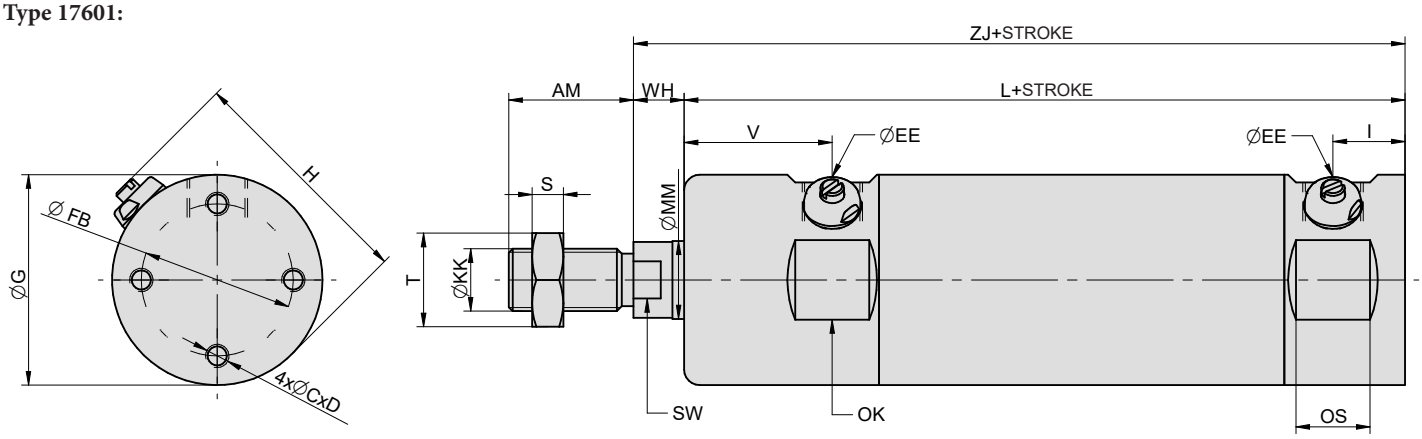

Ø	AM	C	D	E	FA	FB	EE	G	H	I	KK	L	MM	OK	OS	S	SW	T	V	W	WH	ZJ
32	22	M5	7	31	—	25	G1/8“	36	45	17.5	M10x1.25	114.5	12	33	16.5	5	10	17	32	128.5	9	123.5
40	24	M6	8	33	—	30	G1/4“	44	53	18	M12x1.25	132	16	40	20	6	13	19	39	152.5	9	141
50	32	M6	8	45	39	39	G1/4“	54	64	18.5	M16x1.5	135	20	50	19	8	17	24	38	154	13	148
63	32	M8	8	45	49	49	G3/8“	68	78	23	M16x1.5	151	20	64	24	8	17	24	40	166	13	164
80	40	M10	8.5	55.5	64	64	G3/8“	86	96	22	M20x1.5	164	25	82	24	10	21	30	46	191	15.5	179.5
100	40	M10	10	56	82	82	G3/8“	106	116	24	M20x1.5	173	25	102	26	10	21	30	46	198	16	189

Mounting accessories
(stainless steel)

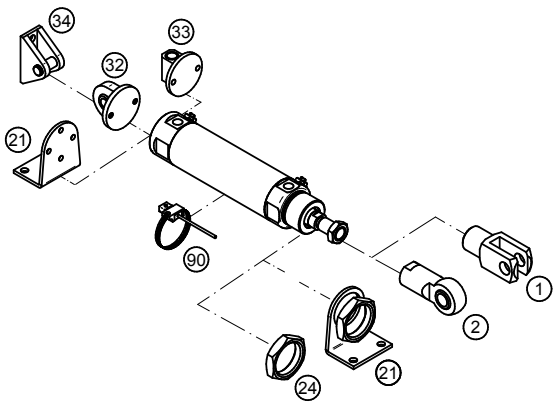

Mounting accessories	... see page
1 Piston rod clevis	... 4-26
2 Piston rod eye	... 4-26
21 Foot mounting	... 4-26
24 Front/end cap nut	... 4-27
32 Swivel flange with spherical bearing	... 4-27
33 Swivel flange	... 4-27
34 Narrow swivel flange	... 4-28
90 Prox. switch	... 3-2, 3-4

DOUBLE ACTING PNEUMATIC CYLINDERS SHORT STROKE

STRÁNSKÝ A PETRŽÍK

Pneumatic cylinder may be used, when small mounting dimensions are required. The cylinders can work in higher temperatures by request. There is no cushioning at the end of stroke.

Working pressure	0,6 MPa
Min. pressure	0,15 MPa
Max. pressure	1,0 MPa
Temp. range	-20°C to +80°C *
Working medium	modified compressed air

*) values are valid for standard gaskets

Piston diameter [mm]	20	25	32	40	50	63	80	100	160	250
Thrust at 0,6 MPa [N]	188	295	482	754	1178	1870	3015	4713	12064	29460
Thrust at 0,6 MPa [N] with double ended piston rod	158	248	415	662	1025	1717	2720	4484	11309	27600
Return force at 0,6 MPa [N]	158	248	415	662	1025	1717	2720	4484	11309	27600
Connection	M5	G1/8“	G1/8“	G1/8“	G1/8“	G1/8“	G1/4“	G1/4“	G3/8“	G1/2“
Max. stroke [mm] *	50*	50*	50*	50*	50*	50*	50*	50*	60*	40*
Weight 0 mm stroke [kg]	0,05	0,08	0,16	0,29	0,43	0,60	1,10	1,80	8,20	30,00
Weight add. per 1 mm stroke [kg]	0,0014	0,0015	0,0040	0,0060	0,0080	0,0100	0,0160	0,0200	0,0600	0,0830
Weight 0 mm stroke [kg] with double ended piston rod	0,06	0,09	0,17	0,32	0,50	0,70	1,20	2,00	8,90	33,00
Weight add. per 1 mm stroke [kg] with double ended piston rod	0,0022	0,0036	0,0050	0,0070	0,0100	0,0120	0,0190	0,0250	0,0700	0,0980

*) Stroke of cylinder may be longer after agreement with our technical dept.

Order codes

12501 10 00 050 0010

Type	
12501	short stroke, double acting

Equipment	
00	w/o magnet, external thread
01	w/o magnet, internal thread
05	with double ended piston rod, w/o magnet, external thread
06	with double ended piston rod, w/o magnet, internal thread
10	with magnet, external thread
11	with magnet, internal thread
15	with double ended piston rod, with magnet, external thread
16	with double ended piston rod, with magnet, internal thread

Options	
00	without options
10	Viton® piston rod sealing
11	Viton® gaskets (up to 180°C)
14	1.4301 stainless steel piston rod

For more options regarding materials or dimensions, please contact our technical dept.

Piston diameter	
020	20 mm
025	25 mm
032	32 mm
040	40 mm
050	50 mm
063	63 mm
080	80 mm
100	100 mm
160	160 mm
250	250 mm

Stroke / Repair kit	
xxxx	mm of stroke e.g.: 0010 = stroke 10 mm
9999	repair kit

Construction / materials

- caps: anodized dural, piston dia. 250 mm: aluminium casting
- body: drawn dural profile, anodized, piston dia. 160 and 250 mm: aluminium casting
- piston rod: grounded round steel bar CK45 with hard chrome plated surface

Dimensions

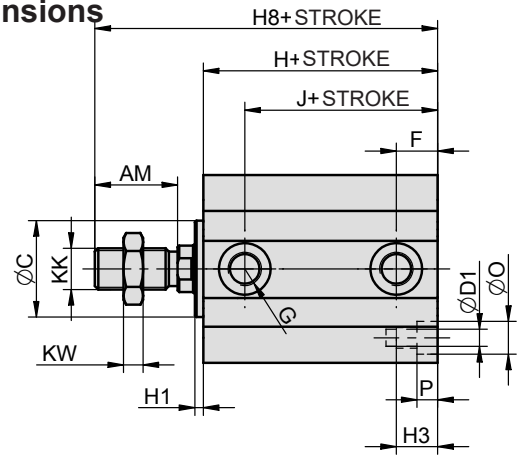

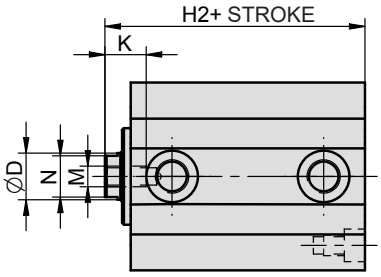

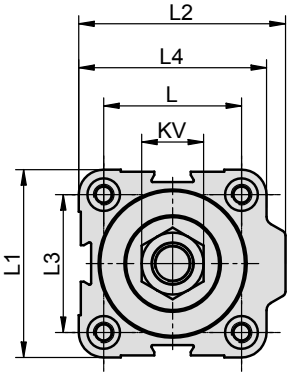

Double ended piston rod: other dimensions are the same as standard type)

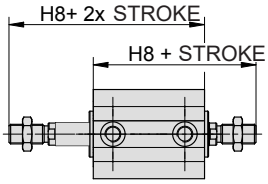

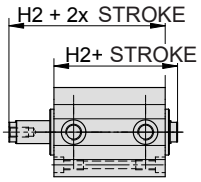

∅	AM	C	D	D1	F	G	H	H1	H2	H3	H8	J	K	KK	KV	KW	L	L1	L2	L3	L4	M	N	O	P
20	20	12	8	M5	9	M5	28	2,5	35,5	15	55,5	19	8	M8	13	6	22	32	35	22	32	M5	7	7	5
20M	20	12	8	M5	9	M5	53,5	2,5	61	15	81	44,5	8	M8	13	6	22	32	35	22	32	M5	7	7	5
25	22	17	10	M5	10	G1/8“	32	2,5	39,5	15	61,5	22	8	M10x1,25	17	6	28	38	45	26	39	M5	8	8	5
25M	22	17	10	M5	10	G1/8“	46	2,5	53,5	15	75,5	36	8	M10x1,25	17	6	28	38	45	26	39	M5	8	8	5
32	22	21	12	M6	11	G1/8“	40	2,5	47,5	18	69,5	29	12	M10x1,25	17	6	36	45	54	32	48	M6	10	9,5	6
32M	22	21	12	M6	11	G1/8“	52	2,5	59,5	18	81,5	41	12	M10x1,,5	17	6	36	45	54	32	48	M6	10	9,5	6
40	24	28	14	M6	12	G1/8“	48	2,5	55,5	18	79,5	36	12	M12x1,25	19	10	40	55	60	40	55	M6	12	9,5	6
50	32	36	18	M8	13	G1/8“	49	2,5	57,5	24	89,5	36	14	M16x1,5	24	8	50	65	73	50	65	M8	16	11	8
63	32	48	18	M10	14,5	G1/8“	47	3,5	56,5	24,5	88,5	32,5	14	M16x1,5	24	8	62	80	88	62	80	M8	16	14	8,5
80	43	54	22	M10	16,5	G1/4“	52	3,5	61,5	24,5	104,5	35,5	17	M20x1,5	30	9	82	100	110	82	100	M10	19	14	8,5
80M	43	54	22	M10	16,5	G1/4“	57	3,5	66,5	24,5	109,5	40,5	17	M20x1,5	30	9	82	100	110	82	100	M10	19	14	8,5
100	43	60	22	M12	20	G1/4“	60	6	72	29	115	40	20	M20x1,5	30	9	103	124	134	103	124	M12	19	17	11
100M	43	60	22	M12	20	G1/4“	62	6	74	29	117	42	20	M20x1,5	30	9	103	124	134	103	124	M12	19	17	11
160	72	110	40	M20	23	G3/8“	96	–	113	45	185	73,5	25	M36x2	50	18	154	200	210	154	200	M16	36	26	21
250	84	–	50	M20	42	G1/2“	146	–	169	60	253	104	35	M42x2	65	21	220	275	300	220	–	M24	46	26	20

Notice: M after piston diameter size means cylinder with magnetic piston.

Mounting accessories

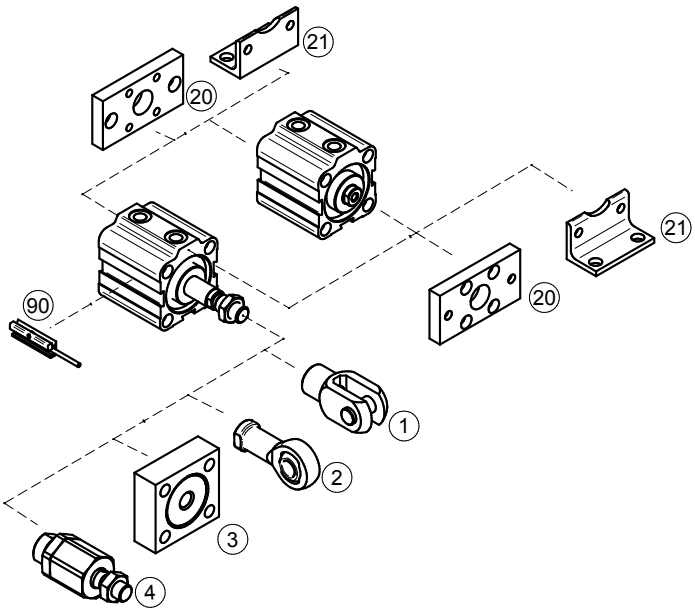

Mounting accessories	... see page
1 Piston rod clevis	... 4-2
2 Piston rod eye	... 4-3
3 Flanged piston rod coupling	... 4-2
4 Self-aligning piston rod coupling	... 4-3
20 Flange mounting	... 4-29
21 Foot mounting	... 4-29
90 Prox. switch	... 3-2, 3-4

DOUBLE ACTING ROTARY ACTUATORS

STRÁNSKÝ A PETRŽÍK

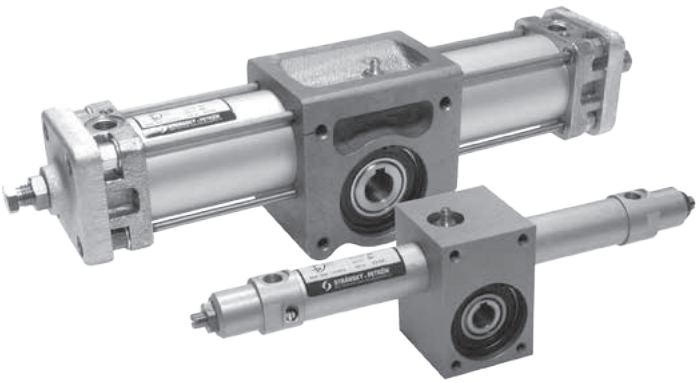

Linear piston movement is converted to rotary motion by rack and pinion. The cylinders can work in higher temperatures by request. Fully adjustable cushioning at end of stroke is available.

Working pressure	0,6 MPa
Min. pressure	0,15 MPa
Max. pressure	1,0 MPa
Temp. range	-20°C to +80°C *
End position regulation	±5°
Working medium	modified compressed air

*) values are valid for standard gaskets

Piston diameter [mm]	20	25	32	40	50	63	80	100	125	160
Torque at 0.6 MPa [Nm]	3.5	5.5	8.7	13.6	27	42	108	173	397	651
Connection	G1/8“	G1/8“	G1/8“	G1/8“	G1/4“	G3/8“	G3/8“	G1/2“	G1/2“	G3/4“
Length of adjustable cushioning [mm]	15	15	18	20	20	22	25	25	25	45
Max. angle of pinion rotation [˚]	360	360	360	360	360	360	360	360	360	360
Weight 0 mm stroke [kg]	1.02	1.02	1.70	2.39	4.10	4.86	12.40	13.95	31.80	48.40
Weight add per 10˚ pinion rotation [kg]	0.013	0.009	0.008	0.010	0.022	0.023	0.083	0.144	0.255	0.321

Order codes

15101 61 00 050 0180

Type	
15201	rotary actuator, double acting, piston dia. 20 to 40 mm
15101	rotary actuator, double acting, piston dia. 50 to 160 mm

Equipment	
01	w/o cushioning, w/o magnet
11	w/o cushioning, with magnet
51	with cushioning, w/o magnet
61	with cushioning, with magnet

Options	
00	without options
11	Viton® gaskets (up to 180°C)

For more options regarding materials or dimensions, please contact our technical dept.

	Piston diameter
020	20 mm
025	25 mm
032	32 mm
040	40 mm
050	50 mm
063	63 mm
080	80 mm
100	100 mm
125	125 mm
160	160 mm

Angle / repair kit	
xxxx	angle of pinion rotation in degrees
0090	angle 90˚
0180	angle 180˚
0270	angle 270˚
0360	angle 360˚
9999	repair kit

In case of proximity sensing request, please use switches series KT-50 or KT-21 - see page 3-2 for details

Construction / materials

- caps: piston dia. 20 to 40: anodized dural, piston dia. 50 and more: aluminium casting
- gear body: anodized dural
- body: drawn dural tube, anodized
- regulation flange: piston dia. 20 to 40: none, piston dia. 50 and more: zinc plated cast iron
- rack and pinion: steel 1.0060
- pinion is mounted between ball bearings

Dimensions

Piston diameter 20 to 40 mm:

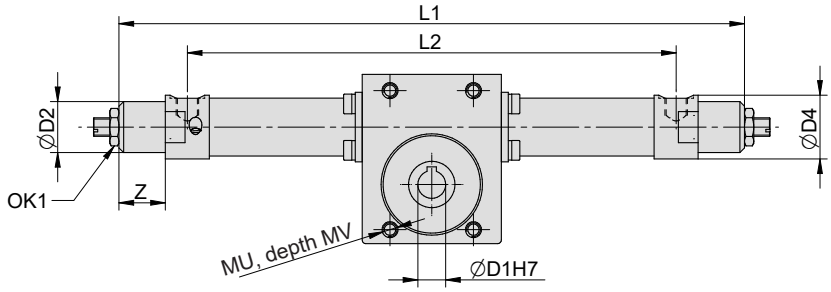

Piston diameter 50 mm and more:

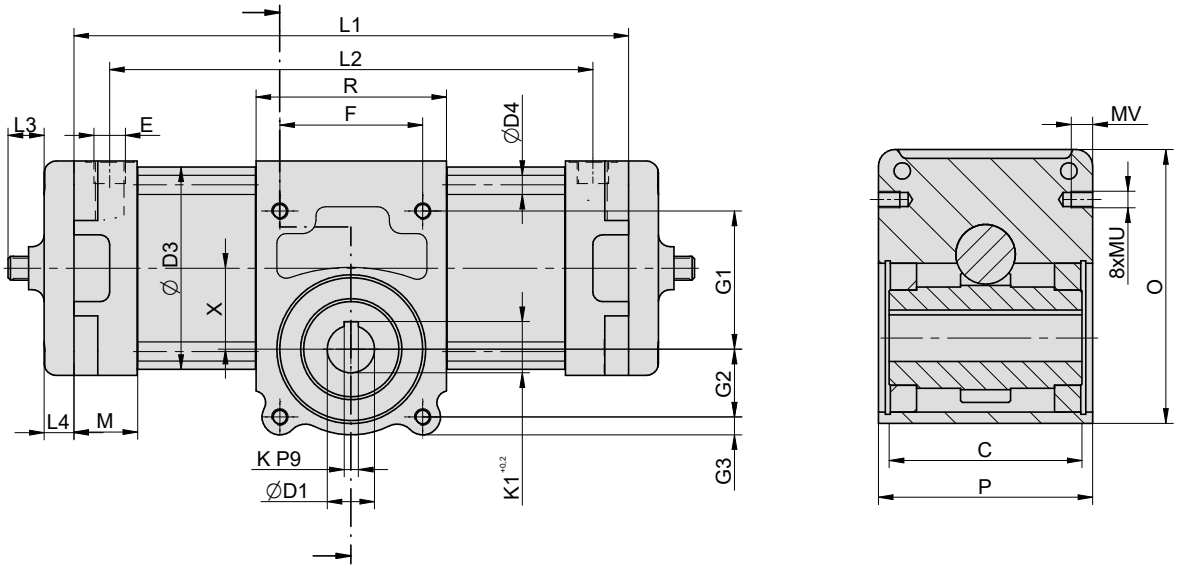

∅	C	D1	D2	D3	D4	E	F	G1	G2	G3	K	K1	L3 max.	L4	M	MU	MV	O	OK1	P	R	X	Z
20	42	12	22	25	27.5	G1/8“	36	40.5	19.5	6	4	13.6	9	—	19	M6	8	73	14	54	60	24.75	20
25	42	12	24	30	32	G1/8“	36	40.5	19.5	6	4	13.6	9	—	22	M6	8	73	14	54	60	24.75	14
32	42	12	30	36	40	G1/8“	36	40.5	19.5	6	4	13.6	10	—	22	M6	8	73	14	54	60	24.75	21
40	42	12	35	45	50	G1/8“	36	40.5	19.5	6	4	13.6	7	—	22.5	M6	8	73	14	54	60	24.75	14.5
50	60	18	—	55	8	G1/4“	75	44.5	22.5	10.5	6	20.5	32	14	30	M8	12	100	—	73	96	32.5	—
63	60	18	—	68	8	G3/8“	75	44.5	22.5	8.5	6	20.5	32	14	30	M8	12	100	—	73	96	32.5	—
80	92	24	—	86	10	G3/8“	85	73	40	13.5	8	27	34	15	30	M10	13	161	—	111	116	52	—
100	92	24	—	106	8.85	G1/2“	85	75	40	13.5	8	27	38	15	36	M12	15	161	—	111	116	52	—
125	160	40	—	132	12	G1/2“	120	116	57	15	12	43.1	34	25	40	M14	18	230	—	180	160	70	—
160	160	40	—	167	16	G3/4“	120	116	57	15	12	43.1	42	25	50	M14	18	230	—	180	160	70	—

∅	20		25		32		40		50		63		80		100		125		160	
— Angle	L1	L2	L1	L2	L1	L2	L1	L2	L1	L2	L1	L2	L1	L2	L1	L2	L1	L2	L1	L2
90°	270	211	272	222	297	233	291	239	326	292	351	319	397	365	423	387	517	473	555	505
180°	329	270	330	280	356	292	350	298	397	363	422	390	510	478	536	500	674	630	712	662
270°	388	329	389	339	414	350	409	357	468	434	493	461	623	591	649	613	832	788	870	820
360°	447	388	448	398	474	410	468	416	538	504	563	531	736	704	758	726	988	944	1026	976

DOUBLE ACTING PNEUMATIC SWING ACTUATORS SERIES ATM

STRÁNSKÝ A PETRŽÍK

Swing actuators of the ATM series are mainly intended for the control of fittings and valves. The swing movement is ensured by a pair of toothed combs with pistons. The advantage is a constant torque in the range of the entire swinging movement. The actuators have a fitting connection according to ISO 5211 and DIN 3337. The drive is prepared for switchboards and position sensors with connection according to NAMUR VDI/VDE 3845, air can be connected directly to the threaded holes.

Working pressure	0,6 MPa
Min. pressure	0,2 MPa
Max. pressure	0,8 MPa
Temp. range	-20°C to +80°C *
End position regulation	±4°
Working medium	modified compressed air

*) values for temp. range B

Piston diameter [mm]	52	63	75	83	92	105	125	140	160	190	210	240	270	300	350	400
Connection	G1/4“	G1/4“	G1/4“	G1/4“	G1/4“	G1/4“	G1/4“	G1/4“	G1/4“	G1/4“	G1/4“	G1/4“	G1/2“	G1/2“	G1/2“	G1/2“
Air source interface	NAMUR VDI/VDE 3845															
Flange connection pattern 1	F03	F05	F05	F05	F05	F07	F07	F10	F10	–	–	–	–	–	F16	F16
Flange connection pattern 2	F05	F07	F07	F07	F07	F10	F10	F12	F12	F14	F14	F16	F16	F16	F25	F25
Armature connection	ISO 5211															
Position sensing	optical with the option of connecting a sensor, positioner or sensor box															
Connection of position sys.	NAMUR VDI/VDE 3845															
Opening time [s] at 0,8 MPa	0,3	0,4	0,4	0,5	0,6	0,7	0,9	1,2	1,6	2,6	3,3	3,8	4,5			
Closing time [s] at 0,8 MPa	0,4	0,4	0,5	0,6	0,7	0,7	1,1	1,4	1,7	3,1	3,8	4,4	5,3			
Weight [kg]	1,38	2,03	2,85	3,13	4,6	6,8	10,0	13,3	20,2	31,5	47,0	67,6	97,0			

Order codes

ZG-ATM 125 X 90 B AM

	Piston diameter
052	52 mm
063	63 mm
075	75 mm
083	83 mm
092	92 mm
105	105 mm
125	125 mm
140	140 mm

	Piston diameter
160	160 mm
190	190 mm
210	210 mm
240	240 mm
270	270 mm
300	300 mm
350	350 mm
400	400 mm

	Swing angle
90	angle 90°
120	angle 120°
135	angle 135°
180	angle 180°

	Temperature range
B	-20°C to +80°C
D	-40°C to +80°C
G	-15°C to +150°C

The swing direction is standard to the right (clockwise). If you require the opposite swing direction, please contact our technical department.

Limit switches can be found on page 3-10

Actuator sizing

The recommended safety factor for double-acting swing actuator is 20 to 30% under normal conditions. Example of determining the size of the drive:
The required torque of the fitting is 100 Nm, the torque increased by the safety factor is 100 + 30% of 100 = 130 Nm. At an inlet pressure of 0.5 MPa, it is therefore advisable to choose the ZG-ATM105 actuator.

Construction / materials

- body: hard anodized extruded aluminum alloy, honed bore
- pistons: Aluminum casting or steel casting
- pinion and cam: steel
- caps: Aluminium casting
- seal: NBR, or FPM or silicone
- fasteners: stainless steel
- position indicator: plastic

Notice

The torque caused by the drive must not be greater than the maximum permissible torque specified in ISO 5211 for the specific size of the mounting flange.

Technical data

Torque [Nm] depending on working pressure

Inlet pressure [MPa]	Piston diameter [mm]															
	52	63	75	83	92	105	125	140	160	190	210	240	270	300	350	400
0,2	8,1	15	20,1	30,8	45	66	100	171	267	426	530	769	1174	1526	2285	3256
0,25	10,1	18	25	39	56	83	125	214	332	532	665	966	1462	1908	2856	4069
0,3	12,1	22	30	47	68	99	150	256	399	638	798	1154	1754	2289	3427	4883
0,4	16,1	29	40	63	90	132	200	342	532	852	1064	1539	2339	3052	4570	6511
0,45	18,1	33	45	70	102	149	225	385	598	958	1197	1731	2632	3434	5141	7325
0,5	20	36	50	78	113	165	250	427	665	1064	1330	1924	2924	3815	5712	8139
0,55	22	40	55	86	124	182	275	470	731	1170	1463	2116	3216	4197	6283	8953
0,6	24	44	60	94	135	198	300	513	798	1277	1596	2308	3509	4578	6854	9767
0,7	28	51	70	110	158	231	350	598	931	1490	1862	2693	4094	5341	7997	11394
0,8	32	58	80	125	181	264	400	684	1064	1702	2128	3078	4679	6104	9139	13022

Dimensions

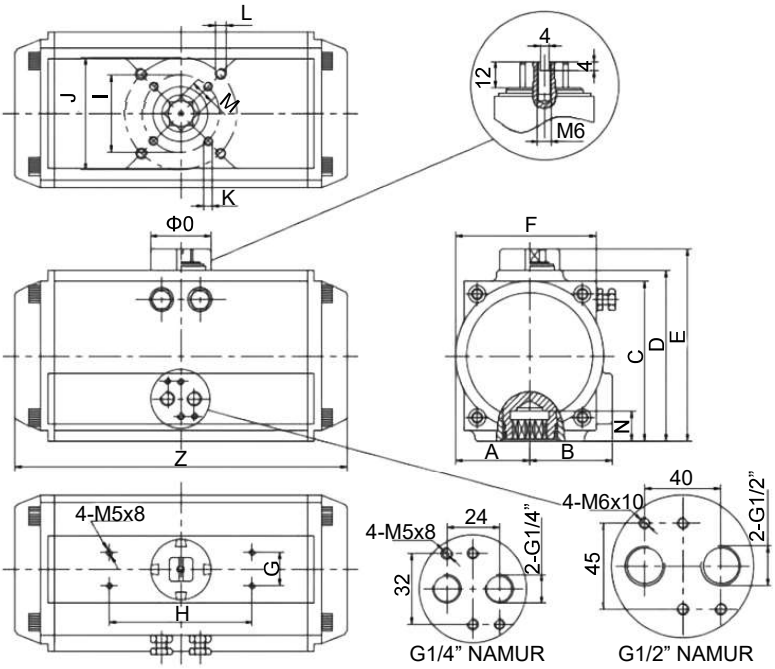

∅	A	B	C	D	E	F	G	H	∅ I	∅ J	K	L	M	N	Z	O	Air source
52	30	41,5	65,5	72	92	65	30	80	36	50	M5x8	M6x10	11	14	147	40	NAMUR G1/4"
63	36	47	81	87,5	108	72	30	80	50	70	M6x10	M8x13	14	18	168	40	
75	42	53	94	99,5	120	81	30	80	50	70	M6x10	M8x13	14	18	184	40	
83	46	57	98,5	108,7	129	92	30	80	50	70	M6x10	M8x13	17	21	204	40	
92	50	58,5	111	116,5	137	98	30	80	50	70	M6x10	M8x13	17	21	262	40	
105	57,5	64	123	133	153	110	30	80	70	102	M8x13	M10x16	22	26	268	40	
125	67,5	74,5	146	155	185	128	30	130	70	102	M8x13	M10x16	22	26	301	55	
140	75	77	161	172	202	138	30	130	102	125	M10x16	M12x20	27	31	390	55	
160	87	87	184	197	227	158	30	130	102	125	M10x16	M12x20	27	31	458	55	
190	103	103	216	230	260	189	30	130	–	140	–	M16x25	36	50	525	80	
210	113	113	236	255	285	210	30	130	–	140	–	M16x25	36	50	532	80	
240	130	130	265	290	320	245	30	130	–	165	–	M20x25	46	60	602	80	
270	147	147	299	330	360	273	30	130	–	165	–	M20x25	46	60	722	80	NAMUR G1/2"
300	162	173	330	354	384	312	30	130	–	165	–	M20x25	46	60	820	80	
350	190	195	383	410	440	362	30	130	165	254	M20x25	8xM16x25	46	60	900	80	
400	260	260	441	466	496	450	30	130	165	254	M20x25	8xM16x25	46	60	940	80	

RODLESS PNEUMATIC CYLINDERS SERIES OSP-P

STRÁNSKÝ A PETRŽÍK

The rodless cylinders of the OSP-P series are particularly useful where there is no space for a standard cylinder. The piston rod does not extend from the cylinder. Thanks to their maximum stroke of up to 6 meters, they can also be used in applications where the use of a conventional cylinder would be impossible. This series uses the proven two-strip principle. The cylinders are equipped with a magnetic piston as standard for contactless position sensing. The air connection is standardly from the side of the cover and can be turned to any side.

Working pressure	0,6 MPa
Min. pressure	0,35 MPa
Max. pressure	0,8 MPa
Temp. range	-10°C to +80°C
Working medium	modified compressed air

Piston diameter [mm]	25	32	40	50	63	80
Force at 0.6 MPa [N]	250	420	640	1000	1550	2600
Connection	G1/8“	G1/4“	G1/4“	G1/4“	G3/8“	G1/2“
Length of adjustable cushioning [mm]	17	20	27	30	32	39
Max. stroke [mm]	6000	6000	6000	6000	6000	6000
Carriage speed [m.s^{-1}]	standard: 0,2 to 3, with low speed lubrication: 0,005 to 0,2					
Weight 0 mm stroke [kg]	0,65	1,44	1,95	3,53	6,41	12,46
Weight of 100 mm stroke [kg]	0,197	0,354	0,415	0,566	0,925	1,262

Order codes

P OSP-P 50 - 0 0 0 0 0 - 0500

Piston diameter	
25	25 mm
32	32 mm
40	40 mm
50	50 mm
63	63 mm
80	80 mm

Supply port	
0	standard
1	from the front side
2	one-sided

Sealing	
0	standard NBR
1	Viton®

Lubrication	
0	standard
1	slow speed

Nuts	
0	standard (zinc plated steel)
1	stainless

Stroke	
xxxx	mm of stroke e.g.: 0500 = stroke 500 mm

If you require proximity sensing, please contact our technical department.

Construction / materials

- end caps: aluminium, painted
- body: drawn aluminium tube, anodized
- carrier (piston): aluminium, anodized
- sealing strips: stainless steel
- seals: NBR (optional Viton®)
- screws: steel, galvanized (optional stainless steel)
- scraper covers: plastic

Verification of the effectiveness of internal damping and permissible load with respect to length and supports can be found on our website ww.sappv.cz/r/v18e

Allowable load

Allowed static stress values

∅	F [N]	P1 [N]	M1 [Nm]	M2 [Nm]	M3 [Nm]
25	250	300	15	1,5	3
32	420	450	30	3	5
40	640	750	60	6	8
50	1000	1200	115	10	15
63	1550	1650	200	12	24
80	2600	2400	360	24	48

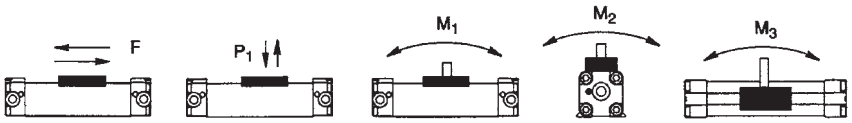

Allowed dynamic stress values

Depending on the speed of piston movement, we determine a coefficient by which we multiply the static stress values and thus obtain the maximum allowable value for dynamic stress.

Speed [m/s]	0,1	0,2	0,3	0,6	0,9	1,2	1,5	1,8	2,1	2,4	2,7	3,0
Coefficient	1,00	0,90	0,67	0,45	0,33	0,24	0,18	0,14	0,11	0,08	0,07	0,06

Dimensions

Standard

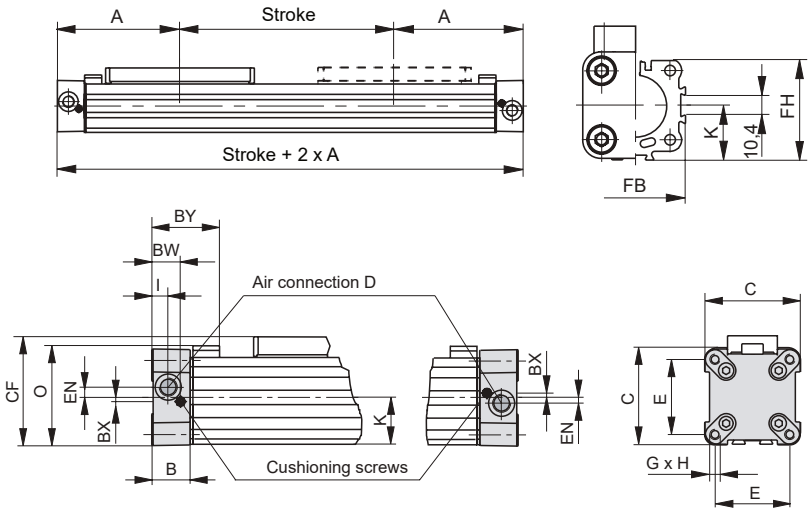

Carrier

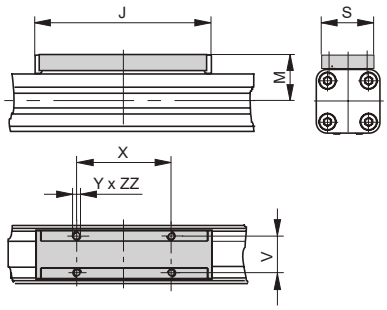

The end caps can be rotated 90° and the air port can be turned to the desired position.

∅	A	B	BW	BX	BY	C	CF	D	E	EN	FB	FH	G	H	I	J	K	M	O	S	V	X	Y	ZZ
25	100	22	17,5	2,2	40	41	52,5	G1/8“	27	3,6	40	39,5	M5	15	9	117	21,5	31	47	33	25	65	M5	8
32	125	25,5	20,5	2,5	44	52	66,5	G1/4“	36	5,5	52	51,7	M6	15	11,5	152	28,5	38	59	36	27	90	M6	10
40	150	28	21	3	54	69	78,5	G1/4“	54	7,5	62	63	M6	15	12	152	34	44	72	36	27	90	M6	10
50	175	33	27	-	59	87	92,5	G1/4“	70	11	76	77	M6	15	14,5	200	43	49	86	36	27	110	M6	10
63	215	38	30	-	64	106	117	G3/8“	78	12	96	96	M8	21	14,5	256	54	63	107	50	34	140	M8	16
80	260	47	37,5	-	73	132	147	G1/2“	96	16,5	122	122	M10	25	22	348	67	80	133	52	36	190	M10	20

Supply port from the front side

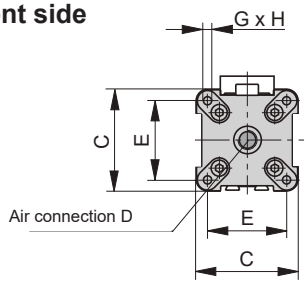

One-sided supply ports

Piston diameter 25 mm

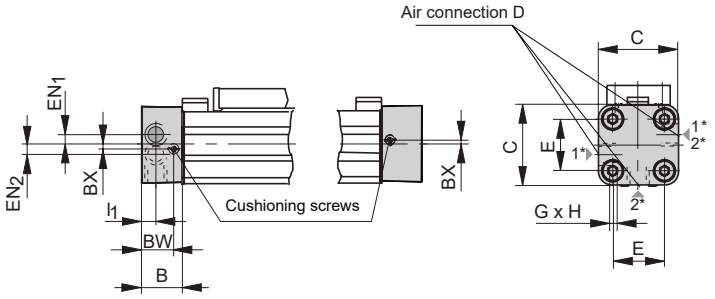

Piston diameters 32 to 80 mm

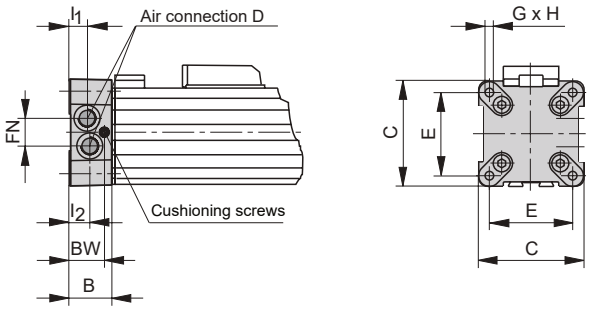

∅	EN1	EN2	FN	I1	I2
25	3,6	3,9	-	9	-
32	-	-	15,2	12,2	10,5
40	-	-	17	12	12
50	-	-	22	14,5	14,5
63	-	-	25	16,5	13,5
80	-	-	34,5	22	17

MAGNETICALLY COUPLED RODLESS PNEUMATIC CYLINDERS SERIES MCRPM

STRÁNSKÝ A PETRŽÍK

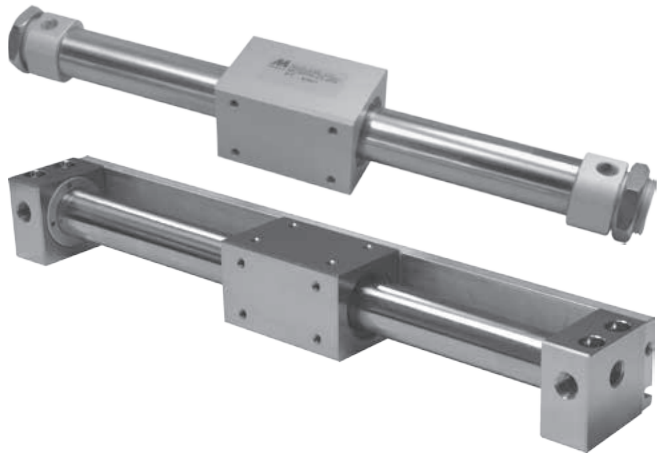

Magnetically coupled rodless cylinders series MCRPM offers long strokes with reduced installation place. Thanks to max. stroke up to 2 meters, these cylinders can be used in such an applications, where use of standard cylinder is impossible. There is no fix connection between piston and carriage, when the force of magnet is exceeded, the carriage will move independently on piston. This feature is utilized as a safety feature, in some applications. Force transmission is provided by strong magnets in piston and carriage. There is no adjustable cushioning at end of stroke.

Working pressure	0,6 MPa
Min. pressure	0,16 MPa
Max. pressure	0,7 MPa
Temp. range	+5°C to +60°C
Working medium	modified compressed air
Carriage speed	50 to 500 mms^{-1}

Piston diameter [mm]	10	15	20	25	32	40
Force at 0.6 MPa [N]	40	95	170	265	432	675
Holding force of magnets [N]	54	137	231	363	588	922
Connection	M5	M5	G1/8“	G1/8“	G1/8“	G1/4“
Max. stroke of standard type / type with rail [mm]	500 / 500	900 / 700	1500 / 1000	2000 / 1000	2000 / 1000	2000 / –
Weight 0 mm stroke of standard type / type with rail [kg]	0.09 / 0.16	0.23 / 0.30	0.41 / 0.52	0.66 / 0.71	1.18 / 1.24	2.00 / –
Weight add. per 1 mm stroke of standard type / type with rail [kg]	0.027 / 0.067	0.032 / 0.080	0.043 / 0.102	0.046 / 0.115	0.066 / 0.150	0.083 / –

Order codes

P MCRP M 20 100

Type	
M	standard
MD	with rail
MDG	with rail, centralized piping

Piston diameter	
10	10 mm
15	15 mm
20	20 mm
25	25 mm
32	32 mm
40*	40 mm

*) Only for cylinder type M

Stroke	
xxx	mm of stroke e.g.: 100 = stroke 100 mm, see table of standard strokes

Piston diameter [mm]	Standard stroke [mm]*
10, 15	100, 150, 200, 250, 300, 400, 500
20 to 40	100, 150, 200, 250, 300, 350, 400, 450, 500, 600, 700, 800

*) Please consult us if stroke is out of specification, stroke increment is 1 mm

Allowable load of cylinder with rail

Piston dia. [mm]	Max. allowable load [N]	Non-rotating accuracy [°]	Max. torsion moment [Nm]
10	4	5	0.05
15	9	5	0.18
20	11	4	0.23
25	11	4	0.40
32	15	4	0.12

Note: Non-rotating accuracy will be reduced by distorsion due to longer stroke and switch rail. Values are for 300 mm stroke.

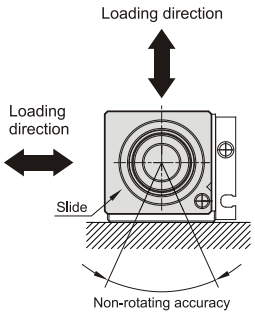

Construction / materials

- caps, carriage, rail: anodized aluminium alloy
- tube: stainless steel
- yokes: nickel plated carbon steel
- seals: NBR

In case of proximity sensing request for cylinders with rail, please use switches series RCE/RPE/RNE - see page 3-8 for detail. There is no possible to use proximity sensing for standard cylinders (without rail).

Dimensions

Standard type - M

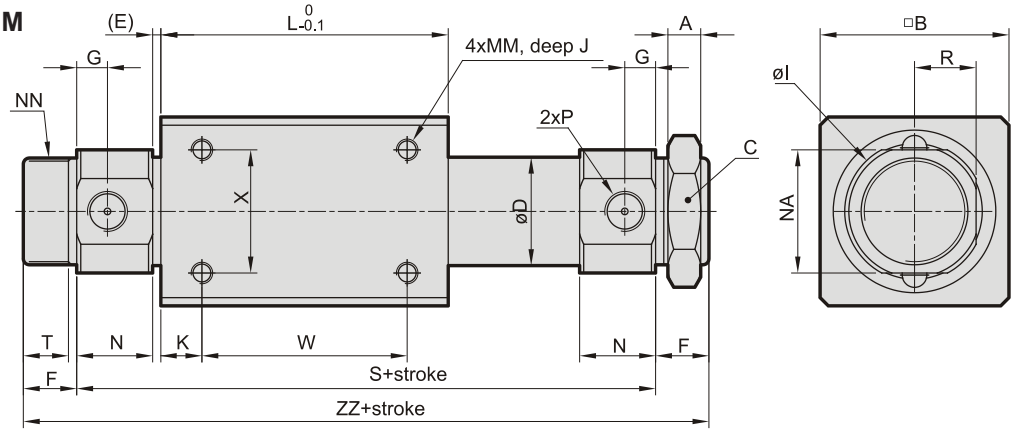

∅	A	B	C	D	E	F	G	I	J	K	L	MM	N	NA	NN	R	S	T	W	X	ZZ	P
10	4	25	14	12	1.5	9	5	16	4.5	4	38	M3	11	14	M10x1	7	63	7.5	30	16	81	M5
15	4	35	14	16.6	2	10	5.5	22	5	11	57	M4	11	20	M10x1	10	83	8.5	35	19	103	M5
20	8	36	26	21.6	2	13	7.5	28	6	8	66	M4	18	24	M20x1.5	12	106	10.5	50	25	132	G1/8“
25	8	46	32	26.4	2	13	7.5	34	8	10	70	M5	18.5	30	M26x1.5	15	111	10.5	50	30	137	G1/8“
32	8	60	32	33.6	2	16	8	40	8	15	80	M6	20	36	M26x1.5	18	124	14	50	40	156	G1/8“
40	10	70	41	41.6	3	16	11	50	10	16	92	M6	26	46	M32x2	23	150	13	60	40	182	G1/4“

Type with rail - MD and MDG

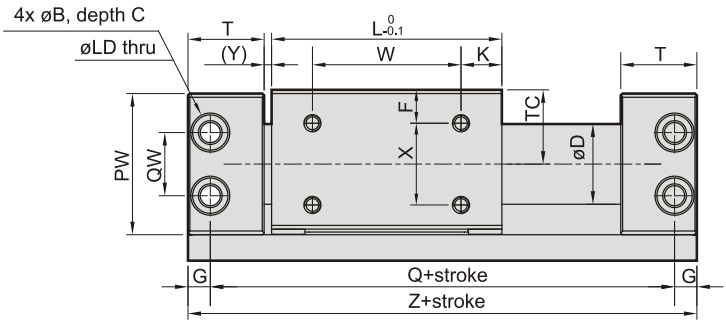

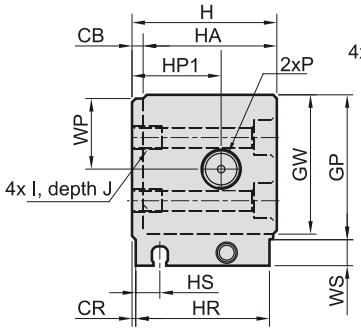

Type MD

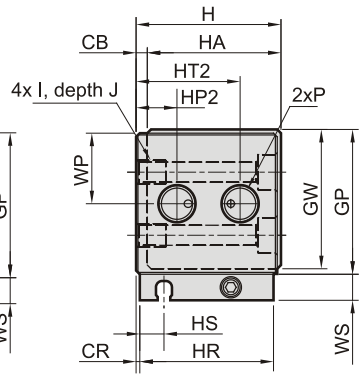

Type MDG

Type MD

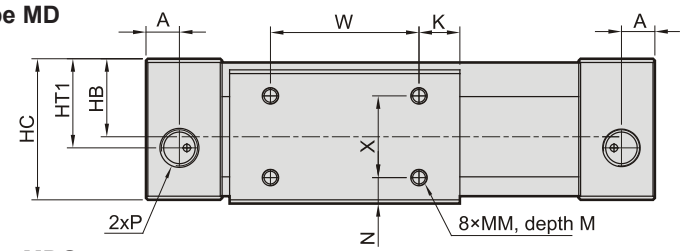

Type MDG

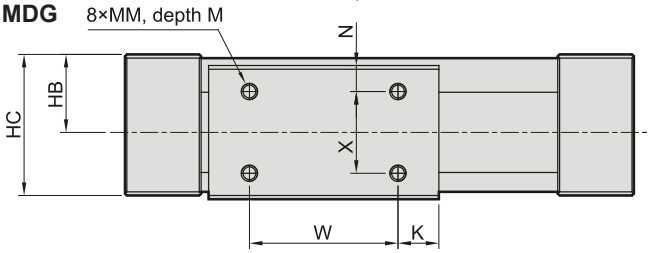

∅	A	B	C	CB	CR	D	F	G	GP	GW	H	HA
10	8.5	6.5	3.2	2	0.5	12	6.5	4	27	25.5	26	24
15	9.5	8	4.2	2	0.5	16.6	8	5	33	31.5	32	30
20	9	9.5	5.2	3	1	21.6	9	6	39	37.5	39	36
25	9	9.5	5.2	3	1	26.4	8.5	6	44	42.5	44	41
32	10.5	11	6.5	3	1.5	33.6	10.5	7	55	53.5	55	52

∅	HB	HC	HP	HP*	HR	HS	HT	HT*	I	J	K	L
10	13	25	14	—	24	4.5	14	—	M4	6	9	38
15	17	31	17	8,5	30	4.9	17	22	M5	7	14	53
20	21	38	24	11	36	6.5	24	28	M6	8	11	62
25	23.5	43	23.5	14.5	41	6.5	23.5	33.5	M6	8	15	70
32	29	54	29	20	51	6	29	40	M8	10	13	76

∅	LD	M	MM	N	P	PW	Q	QW	T	TC	W	WP	WP*	WS	X	Y	Z
10	3.3	4.5	M3	4.5	M5	26	68	14	17.5	14	20	13	—	7	15	1.5	76
15	4.3	5	M4	6	M5	32	84	18	19	17	25	16	13 / 19	7	18	1.5	94
20	5.4	5	M4	7	G1/8“	38	95	17	20.5	20	40	19	19	7	22	2	107
25	5.4	6	M5	6.5	G1/8“	43	105	20	21.5	22.5	40	21.5	21.5	7	28	2	117
32	6.8	7	M6	8.5	G1/8“	54	116	26	24	28	50	27	27	7	35	3	130

*) Values for model MDG

DOUBLE ACTING PNEUMATIC TELESCOPIC CYLINDERS

STRÁNSKÝ A PETRŽÍK

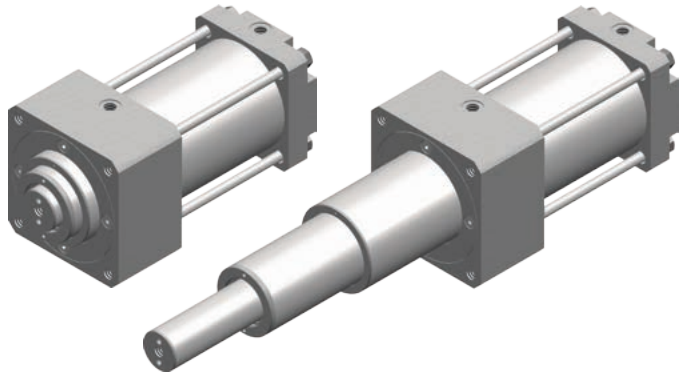

Telescopic cylinders are drives consisting of several pneumatic cylinders folded together. When extending, this drive can achieve strokes that exceed the total design length of the drive and therefore find their application where long strokes are required and there is no space available for standard cylinders. It is recommended to use these cylinders in a vertical position of the axis. In a different orientation, the lateral load will be exerted by its own weight and there will be increased wear of the guide surfaces and seals. The cylinders must not be exposed to lateral (radial) loads or torsional moments of external forces. The force of the telescope is reduced compared to conventional cylinders and is based on the smallest working area of the cylinder in the assembly, both in the extension and retraction directions. Telescopic cylinders are not intended for dusty and abrasive environments.

Working pressure	0,6 MPa
Min. pressure	0,2 MPa
Max. pressure	0,8 MPa
Temp. range	-20°C to +80°C *
Working medium	modified compressed air

*) values are valid for standard gaskets

Composition	**2x**	**2x**	**3x**
Piston diameters [mm]	**80 (+ 63)**	**100 (+ 80)**	**100 (+ 80 + 63)**
Thrust at 0,6 MPa [N]	1870	3016	1870
Return force at 0,6 MPa [N]	936	1227	836
Connection	G1/4“	G1/4“	G1/4“
Maximum stroke [mm] in vertical position*	1600*	2400*	2400*
Maximum stroke [mm] in horizontal position*	1100*	1600*	1600*
Working speed [mm/s]	50 to 500		
Weight 0 mm stroke [kg]	4,04	6,51	6,37
Weight add. per 1 mm stroke [kg]	0,0052	0,0059	0,0045

*) Stroke of cylinder may be longer after agreement with our technical dept.

Order codes

16023 00 00 100 1200

Type	
16022	composition 2x
16023	composition 3x

Equipment	
00	w/o cushioning, w/o magnet

Options	
00	without options

Main piston diameter	
080	80 mm
100	100 mm

Stroke / Repair kit	
xxxx	mm of stroke e.g.: 1200 = stroke 1200 mm
9999	repair kit

Construction / materials

- caps: anodized dural
- body: drawn dural tube, anodized
- piston rod: grounded round steel bar CK45 with hard chrome plated surface
- tightening nuts: zinc plated steel
- tightening screws: stainless steel
- sealing: NBR

Dimensions

Double composition:

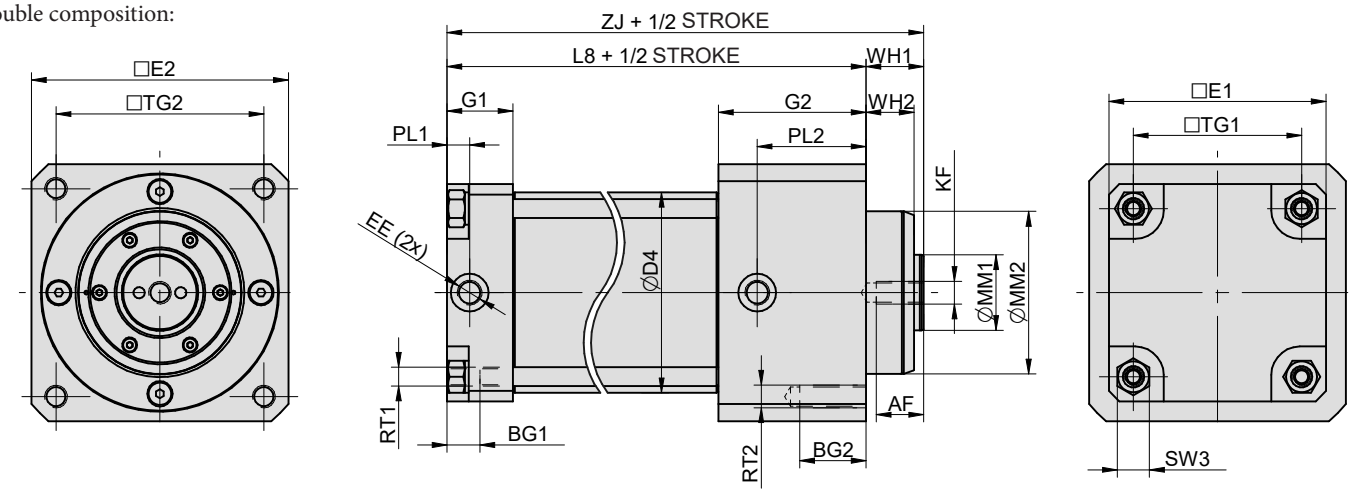

∅	AF	D4	BG1	BG2	E1	E2	EE	G1	G2	KF	L8	MM1	MM2	PL1	PL2	RT1	RT2	SW3	TG1	TG2	WH1	WH2	ZJ
80+63	25	86	17	25	94	115	G1/4“	35	78	M12	132	40	68	12	55,5	M10	M10	17	72	89	16	10	148
100+80	25	106	17	35	115	136	G1/4“	35	78	M12	154,5	40	86	12	57,5	M10	M12	17	89	110	30,5	24,5	185

Triple composition:

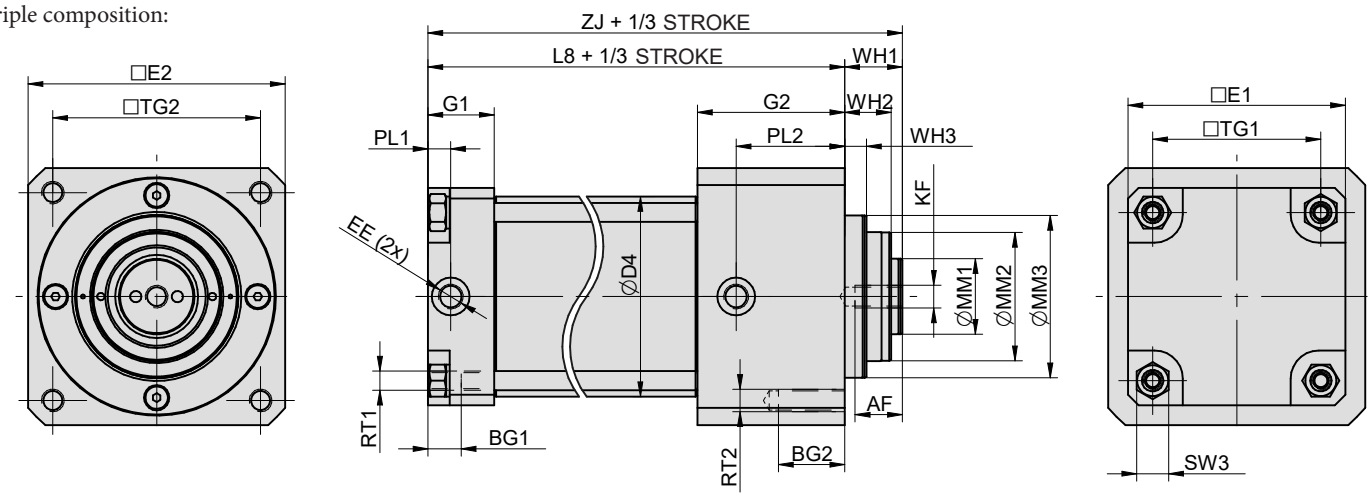

∅	AF	D4	BG1	BG2	E1	E2	EE	G1	G2	KF	L8	MM1	MM2	MM3	PL1	PL2	RT1	RT2	SW3	TG1	TG2	WH1	WH2	WH3	ZJ
100+80+63	25	106	17	35	115	136	G1/4“	35	78	M12	154,5	40	68	86	12	57,5	M10	M12	17	89	110	30,5	24,5	11,5	185

DOUBLE ACTING PNEUMATIC CYLINDERS WITH DOUBLE PISTON ROD VDMA 24562, NF E 49003.1

STRÁNSKÝ A PETRŽÍK

Mounting dimensions meets standard VDMA 24562. Fully adjustable cushioning at end of stroke is available. Using of double piston rod, the rotation of equipment mounted on connecting plate is prevented. This cylinder may not be efforted by torque. Piston rods are guided in slide bearings without clearance.

Working pressure	0,6 MPa
Min. pressure	0,15 MPa
Max. pressure	1,0 MPa
Temp. range	-20°C to +80°C
Working medium	modified compressed air

Piston diameter [mm]	32	40	50	63	80	100	125	160	200
Thrust at 0,6 MPa [N]	482	754	1178	1870	3015	4713	7363	12064	18849
Return force at 0,6 MPa [N]	422	660	1042	1735	2775	4335	6774	11098	17884
Connection	G1/8“	G1/4“	G1/4“	G3/8“	G3/8“	G1/2“	G1/2“	G3/4”	G3/4”
Length of adjustable cushioning [mm]	12	12	12	16	16	20	30	33	33
Max. stroke [mm] *	1000*	1000*	1000*	1000*	1500*	1500*	1500*	1500*	1500*
Weight 0 mm stroke [kg]	0,57	0,68	1,15	1,75	2,90	5,10	9,1	16,60	28,00
Weight add. per 1 mm stroke [kg]	0,003	0,003	0,005	0,007	0,008	0,009	0,017	0,0278	0,0285

*) Stroke of cylinder may be longer after agreement with our technical dept.

Order codes

10115 61 00 050 0100

Type	
10115	DIN ISO 6431, VDMA 24562, NF E 49003.1, double acting, with double piston rod

Equipment	
01	w/o cushioning, w/o magnet
11	w/o cushioning, with magnet
51	with cushioning, w/o magnet
61	with cushioning, with magnet

Options	
00	without options
10	Viton® piston rod sealing
13	round tube*
14	1.4301 stainless steel piston rod
16	steel parts from stainless 1.4301 piston rod stainless 1.4401
37	composite round tube+opt. 10 and 16

*) Only valid for piston dia. 32 to 100 mm included

For more options regarding materials or dimensions, please contact our technical dept.

Piston diameter	
032	32 mm
040	40 mm
050	50 mm
063	63 mm
080	80 mm
100	100 mm
125	125 mm
160	160 mm
200	200 mm

Stroke / Repair kit	
xxxx	mm of stroke e.g.: 0100 = stroke 100 mm
9999	repair kit

Construction / materials

- front cap: drawn dural profile, anodised, end cap: aluminium casting, anodised
- body: drawn dural profile, anodized, piston dia. 125-200: drawn dural tube
- piston rod: grounded round steel bar CK45 with hard chrome plated surface

Dimensions

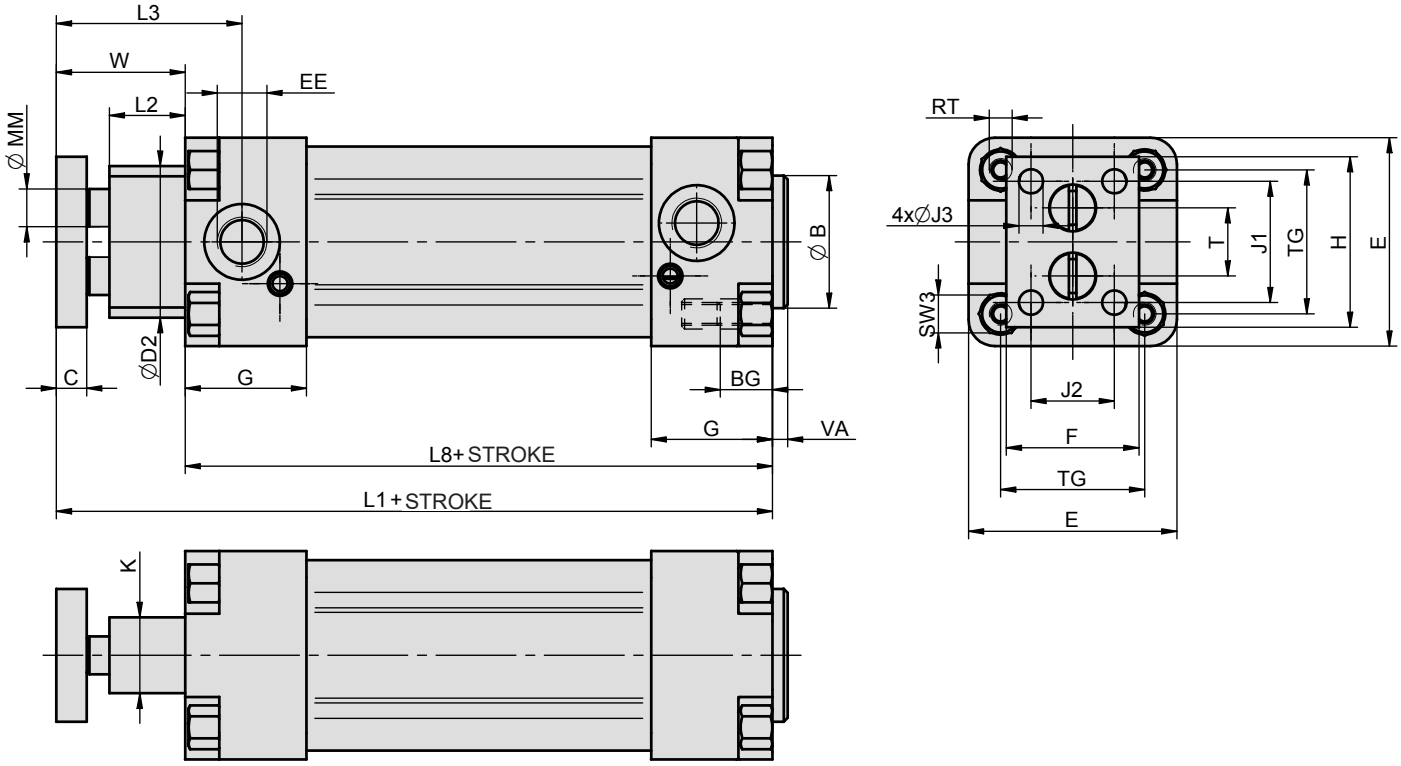

∅	B	BG	C	D2	E	EE	F	G	H	J1	J2	J3	K	L1	L2	L3	L8	MM	RT	SW3	T	TG	VA	W
32	30	16	8	36	48	G1/8“	30	31.5	40	30	20	5.4	16	126	18	47	94	8	M6	10	14	32.5	4	32
40	35	16	8	40	55	G1/4“	35	32	45	32	22	6.4	20	139	20	49	105	10	M6	10	18	38	4	34
50	40	16	8	50	65	G1/4“	40	30	50	38	28	6.4	24	143	22	53	106	12	M8	14	25	46.5	4	37
63	45	17	8	60	75	G3/8“	45	30	60	45	30	6.4	28	158	22	53	121	12	M8	14	26	56.5	4	37
80	45	19	10	76	94	G3/8“	60	30	75	60	45	8.2	40	178	31	65	128	16	M10	17	40	72	4	50
100	55	17	12	90	115	G1/2“	70	36	90	75	55	8.2	50	192	34	72	138	20	M10	17	50	89	4	54
125	60	20	16	120	140	G1/2“	90	40	110	90	70	10.5	60	231	40	89	160	25	M12	22	62	110	6	71
160	65	24	18	150	185	G3/4“	100	50	140	110	80	10.5	70	253	40	98	180	32	M16	30	90	140	6	73
200	75	24	25	200	235	G3/4“	182	50	182	150	150	13	80	265	45	111.5	180	32	M16	30	120	175	6	85

Mounting accessories

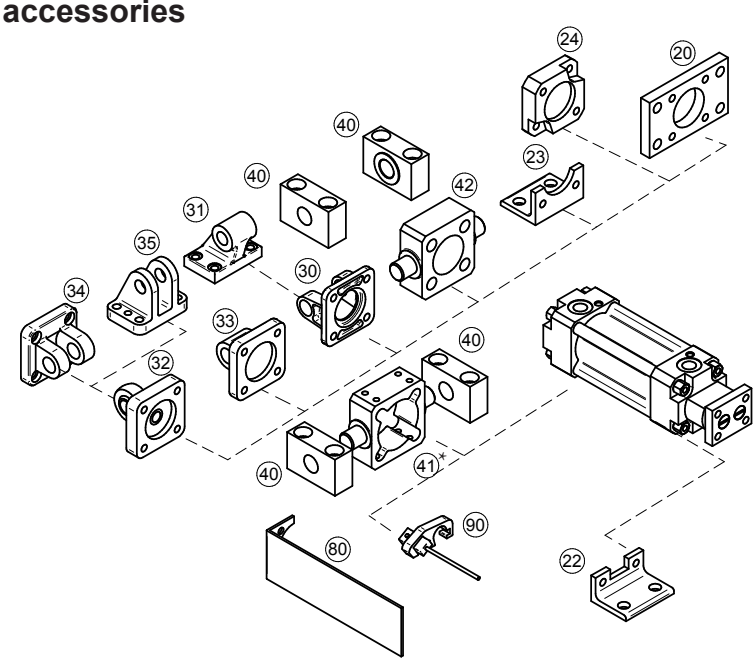

Mounting accessories	... see page
20 Flange mounting	... 4-5
22 Foot mounting for front cap	... 4-6
23 Foot mounting	... 4-5
24 Boxer flange mounting	... 4-6
30 Swivel flange	... 4-7
31 Clevis foot mounting	... 4-7
32 Swivel flange with spherical bearing	... 4-8
33 Swivel flange	... 4-8
34 Narrow swivel flange	... 4-9
35 Rectangular swivel flange	... 4-9
40 Trunnion mounting	... 4-10
41 Pivot pin*	... 4-11
42 Pivot pin to front/end cap	... 4-12
80 Valve bracket	... 4-12
90 Prox. switch	... 3-2, 3-4, 3-7

*) Type of pivot pin should be selected accordingly to the cylinder profile/tube - with cutout for profile or for round tube.

DOUBLE ACTING PNEUMATIC CYLINDERS ISO 15552, VDMA 24562, SERIES MCKQI3, WITH NON-ROTATING ROD

STRÁNSKÝ A PETRŽÍK

A series of cylinders with a piston rod secured against spontaneous rotation. The piston rod has a hexagonal shape and may only be loaded up to the permitted torque value. Dimensions conforms to the international standards ISO 6431, VDMA 24562 and NF E 49003.1, that is why it can replace pneumatic cylinder, which is made by any producer to these standards. Fully adjustable cushioning at end of stroke is standard, magnet for proximity switches is optional for this series.

Working pressure	0,6 MPa
Min. pressure	0,05 MPa
Max. pressure	1,0 MPa
Temp. range	-5°C to +60°C
Working medium	modified compressed air

Piston diameter [mm]	32	40
Thrust at 0,6 MPa [N]	434	679
Return force at 0,6 MPa [N]	353	567
Connection	G1/8“	G1/4“
Length of adjustable cushioning [mm]	23	26
Max. stroke [mm]	700	700
Working speed [mm/s]	50 to 500	
Allowable rotational torque at piston rod [Nm]	0,24	0,44
Rod non-rotating accuracy [°]	±0,5	±0,5
Weight 0 mm stroke [kg]	0,51	0,77
Weight add. per 1 mm stroke [kg]	0,003	0,004

Order codes

P MCKQI3 - 11 - 32 - 50 M

Piston ø	
32	32 mm
40	40 mm

Stroke	
xxx	mm of stroke, e.g. 50 = stroke 50 mm - see allowed combination below

Magnet	
	without magnet
M	with magnetem

Piston ø [mm]	Standard stroke [mm]*
32, 40	50, 75, 100, 125, 150, 175, 200, 300, 400, 500

*) Other strokes are possible, please contact our technical department.

In case of proximity sensing request, please contact our technical department.

Caution

Please don't attempt to rotate the piston rod.

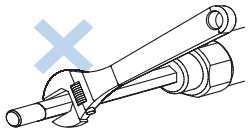

Construction / materials

- caps, piston: aluminium alloy
- body: drawn dural profile, anodized
- piston rod: stainless steel
- sealing: NBR
- fasteners: carbon steel

Dimensions

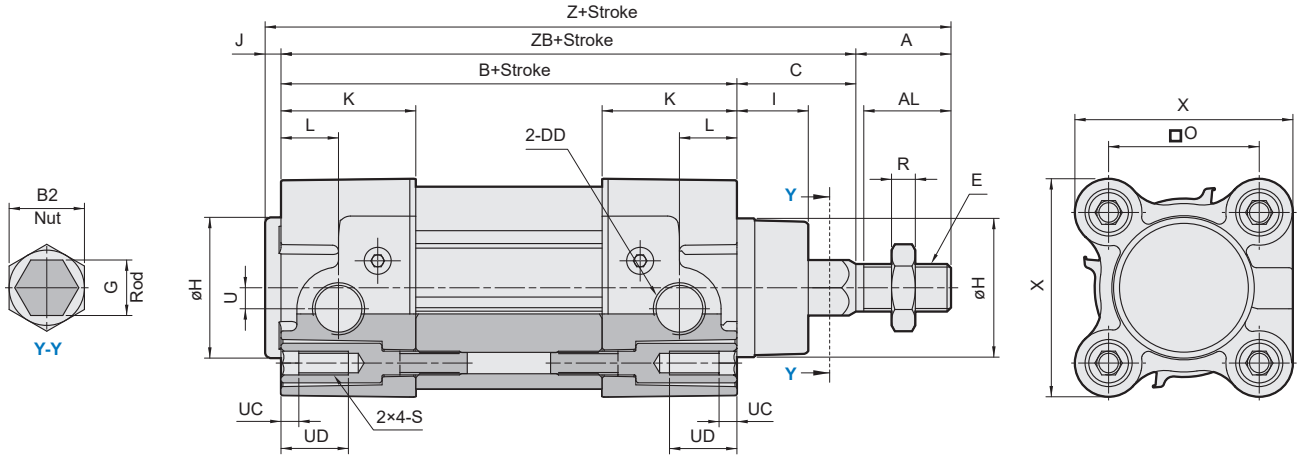

∅	A	AL	B	B2	C	DD	E	G	H	I	J	K	L	O	R	S	U	UC	UD	X	Z	ZB
32	22	19,5	94	17	26	G1/8“	M10x1,25	12	30	15	4	30,5	20	32,5	5	M6	4,5	4,5	16	47	146	120
40	24	22	105	19	30	G1/4“	M12x1,25	14	35	18	4	34	14,5	38	6	M6	5,3	4,5	16	55	163	135

Mounting accessories

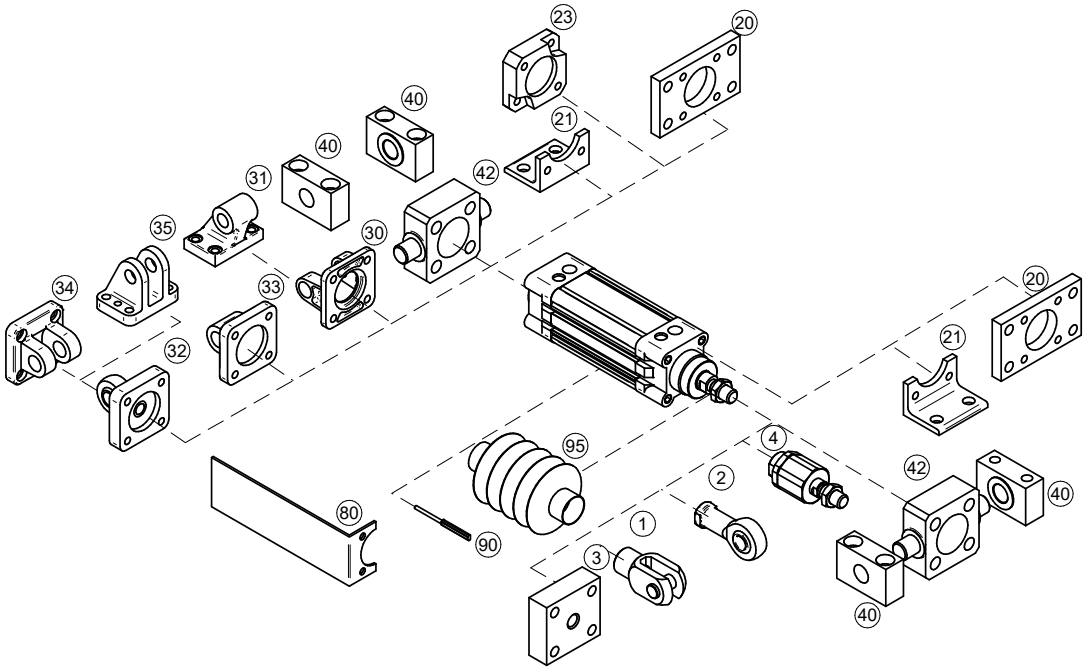

Mounting accessories	... see page
1 Piston rod clevis	... 4-2
2 Piston rod eye	... 4-3
3 Flanged piston rod coupling	... 4-2
4 Self-aligning piston rod coupling	... 4-3
20 Flange mounting	... 4-5
21 Foot mounting	... 4-5
23 Boxer flange mounting	... 4-6
30 Swivel flange	... 4-7
31 Clevis foot mounting	... 4-7
32 Swivel flange with spherical bearing	... 4-8
33 Swivel flange	... 4-8
34 Narrow swivel flange	... 4-9
35 Rectangular swivel flange	... 4-9
40 Trunnion mounting	... 4-10
42 Pivot pin to front/end cap	... 4-12
80 Valve bracket	... 4-12
90 Proximity switch	☎
95 Piston rod protective cover	... 4-4

DOUBLE ACTING PNEUMATIC CYLINDERS COMPACT, SERIES MCKJQ3, WITH NON-ROTATING ROD

STRÁNSKÝ A PETRŽÍK

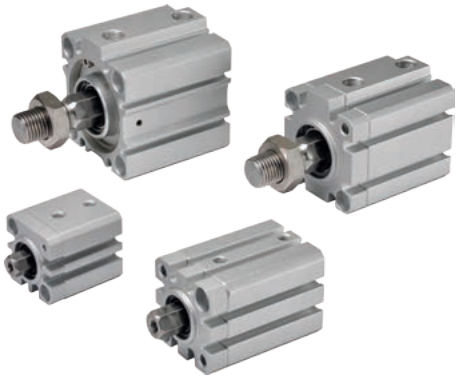

A series of cylinders with a piston rod secured against spontaneous rotation. The piston rod has a hexagonal shape and may only be loaded up to the permitted torque value. This series can be used wherever short installation dimensions are required. The cylinders do not have end position damping. They can be equipped with a magnet for proximity position sensing.

Working pressure	0,6 MPa
Min. pressure	ø12, 16: 0,1 MPa ø20, 25: 0,08 MPa ø32, 40: 0,06 MPa
Max. pressure	1,0 MPa
Temp. range	-5°C to +60°C
Working medium	modified compressed air

Piston diameter [mm]	12	16	20	25	32	40
Thrust at 0,6 MPa [N]	61	109	170	265	434	679
Return force at 0,6 MPa [N]	41	72	113	183	323	567
Connection	M5	M5	M5	M5	G1/8“	G1/8“
Max. stroke [mm]	30	30	100	100	100	100
Working speed [mm/s]	50 to 500					
Allowable rotational torque at piston rod [Nm]	0,04	0,2	0,24	0,24	0,44	0,44
Rod non-rotating accuracy [°]	±1	±0,7	±0,7	±0,5	±0,5	±0,5
Weight 0 mm stroke [kg] with male / female thread, standard stroke	0,05 / 0,05	0,07 / 0,06	0,13 / 0,12	0,19 / 0,18	0,28 / 0,25	0,32 / 0,28
Weight 0 mm stroke [kg] with male / female thread, long stroke	-	-	0,31 / 0,31	0,41 / 0,40	-	-
Weight add. per 1 mm stroke [kg]	0,0014	0,0018	0,0028	0,0036	0,0044	0,0046

Order codes

P MCKJQ3 - 11 - 20 - 25 M - G

Cylinder type	
11	male thread on piston rod
12	female thread on piston rod

Piston ø	
12	12 mm
16	16 mm
20	20 mm
25	25 mm
32	32 mm
40	40 mm

Stroke	
xxx	mm of stroke, e.g. 25 = stroke 25 mm - see allowed combination below

Magnet	
	without magnet
M	with magnetem

Piston ø [mm]	Standard stroke [mm]	Long stroke
12, 16	5, 10, 15, 20, 25, 30	-
20, 25	5, 10, 15, 20, 25, 30, 35, 40, 45, 50	75, 100
32, 40	5, 10, 15, 20, 25, 30, 35, 40, 45, 50, 75, 100	-

In case of proximity sensing request, please contact our technical department.

Caution

Please don't attempt to rotate the piston rod.

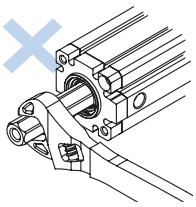

Construction / materials

- caps, piston: aluminium alloy
- body: drawn dural profile, anodized
- piston rod: stainless steel
- sealing: NBR
- fasteners: carbon steel, stainless steel

Dimensions

Type with female thread on piston rod

Piston diameter 12 and 16 mm:

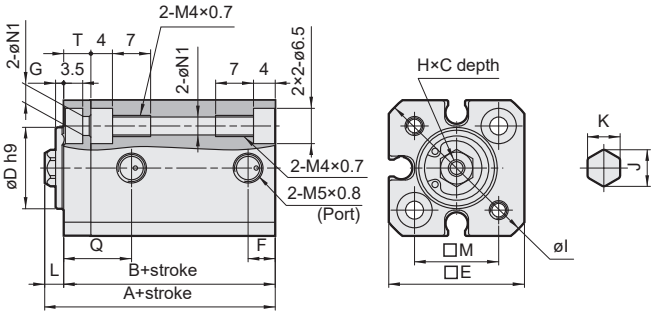

Piston diameters 20 and 25 mm:

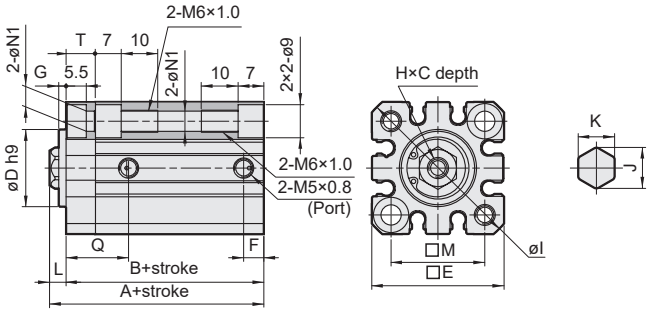

Piston diameter 32 mm:

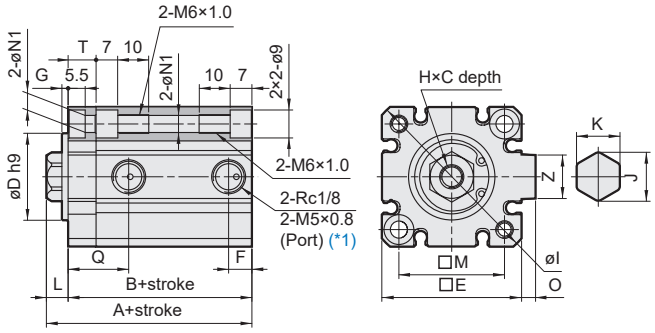

Piston diameter 40 mm:

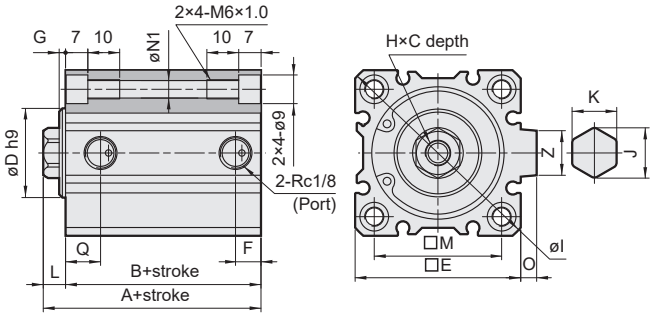

∅	Stroke	Without magnet			With magnet			C	D h9	E	F	G	H	I	J	K	L	M	N1	O	Q	T	Z
		A	B	F	A	B	F																
12	5-30	25,5	22	-	30,5	27	-	6	15	25	5	1,5	M3	32	6,74	6	3,5	15,5	3,5	-	12,5	5	-
16	5-30	27	23,5	-	32	28,5	-	8	19	29	5	1,5	M4	38	8,96	8	3,5	20	3,5	-	14	6,5	-
20	5-50	32	27,5	5,5	42	37,5	5,5	7	21	36	-	2	M5	47	11,24	10	4,5	25,5	5,5	-	17	8	-
	51-100	53,5	49	9	53,5	49	9																
25	5-50	35,5	30,5	5,5	45,5	40,5	5,5	12	22	40	-	2	M6	52	13,52	12	5	28	5,5	-	19	8	-
	51-100	57	52	11	57	52	11																
32	5-50	39	32	-	49	42	-	13	28	45	7,5*	2	M8	60	15,76	14	7	34	5,5	4,5	19,5*	9	14
	51-100	49	42	-	49	42	-																
40	5-50	36,5	29,5	-	46,5	39,5	-	13	28	52	8	2	M8	70	15,76	14	7	40	5,5	5	11	-	14
	51-100	46,5	39,5	-	46,5	39,5	-																

*) Dimensional deviation for ø32 with 5 mm stroke without magnet: port is M5, F=5,5 and Q=20,5

Type with male thread on piston rod

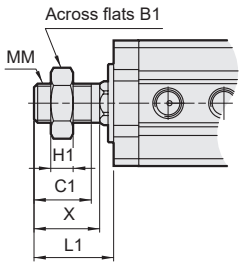

∅	B1	C1	H1	L1	MM	X
12	8	9	4	14	M5	10,5
16	10	10	5	15,5	M6	12
20	13	12	5	18,5	M8	14
25	17	15	6	22,5	M10x1,25	17,5
32	22	20,5	8	28,5	M14x1,5	23,5
40	22	20,5	8	28,5	M14x1,5	23,5

(other dimensions are identical to the type with female thread on the piston rod)

Mounting accessories

You can find the range of mounting accessories for the MCKJQ3 series on our website at sappv.cz/r/v23e

DOUBLE ACTING PNEUMATIC CYLINDERS DIN ISO 6432, SERIES MCKMI, WITH NON-ROTATING ROD

STRÁNSKÝ A PETRŽÍK

A series of cylinders with a piston rod secured against spontaneous rotation. The piston rod has a hexagonal shape and may only be loaded up to the permitted torque value. Dimensions conforms to the international standard ISO 64321. Magnet for proximity switches is standard, fully adjustable cushioning at end of stroke is optional for diameters 20 and more.

1

Working pressure	0,5 MPa
Min. pressure	0,06 MPa
Max. pressure	1,0 MPa
Temp. range	-5°C to +60°C
Working medium	modified compressed air

Piston diameter [mm]	16	20	25
Thrust at 0,5 MPa [N]	91	141	221
Return force at 0,5 MPa [N]	73	111	173
Connection	M5	G1/8“	G1/8“
Length of adjustable cushioning [mm]	-	15	13
Max. stroke [mm]	500	300	500
Working speed [mm/s]	50 to 750		
Allowable rotational torque at piston rod [Nm]	0,04	0,2	0,24
Rod non-rotating accuracy [°]	±1	±0,7	±0,7
Weight 0 mm stroke [kg]	0,07	0,13	0,17
Weight add. per 1 mm stroke [kg]	0,0005	0,0008	0,0012

Order codes

P MCKMI - 11 - 20 - 100 -A -N

Piston ø	
16	16 mm
20	20 mm
25	25 mm

Stroke	
xxx	mm of stroke, e.g. 100 = stroke 100 mm - see allowed combination below

Piston ø [mm]	Standard stroke [mm]*
16	15, 25, 50, 75, 100, 125, 150, 200
20, 25	15, 25, 50, 75, 100, 125, 150, 200, 250, 300

*) Other strokes are possible, please contact our technical department.

Cushioning	
	without
-A	with adjustable cushioning (only for ø20 and 25 mm)

End cap style	
	standard
-N	non-pivot type 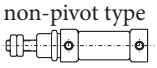

In case of proximity sensing request, please contact our technical department.

Caution

Please don't attempt to rotate the piston rod.

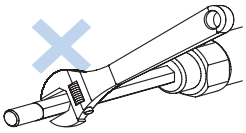

Construction / materials

- caps, piston: aluminium alloy
- tube: stainless steel
- piston rod: stainless steel
- sealing: NBR
- nuts: carbon steel

Dimensions

Type with standard end cap

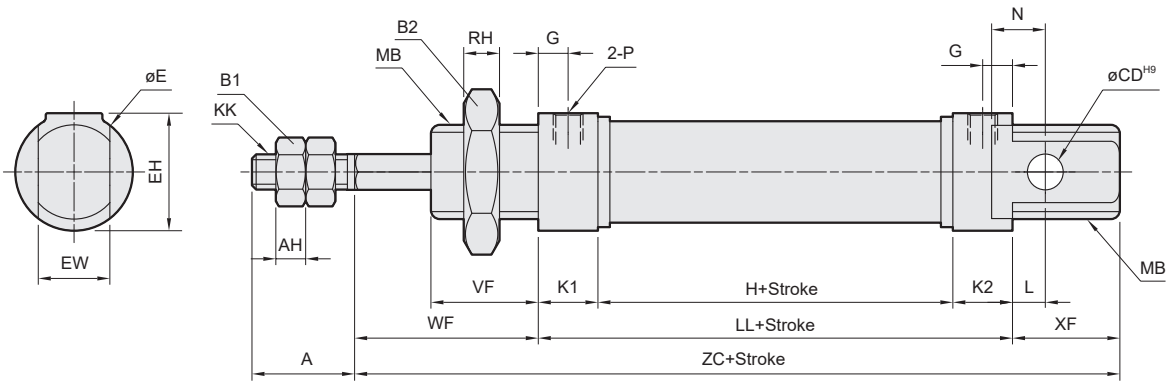

Type with non-pivot end cap

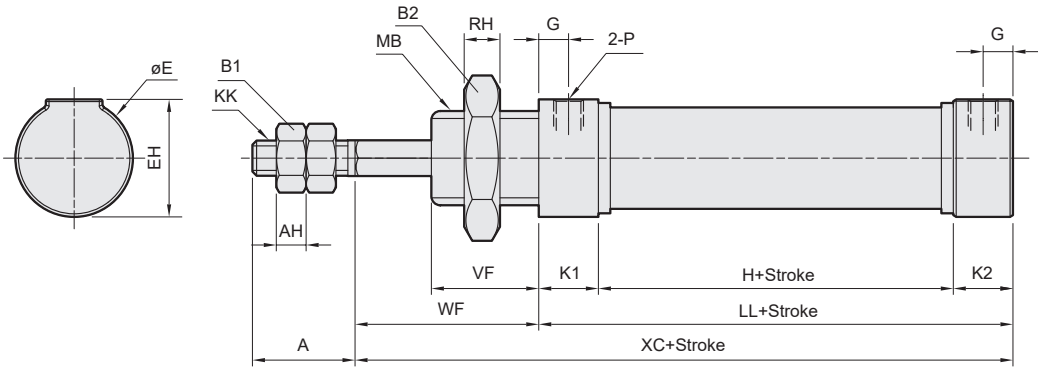

∅	A	AH	B1	B2	CD	E	EH	EW	G	H	KK	K1	K2	L	LL	MB	N	P	RH	VF	WF	XC	XF	ZC
16	16	5	10	22	6	20	20	12	5	34,5	M6	10	10	5,5	54,5	M16x1,5	9	M5	6	18	22	76,5	18	94,5
20	20	5	13	30	8	27	27	16	8	38	M8	15	15	3	68	M22x1,5	12	G1/8“	6	20	24	92	20	112
25	22	6	17	30	8	27	27	16	7,5	37	M10x1,25	15	15	9	67	M22x1,5	12	G1/8“	6	22	28	95	22	117

Mounting accessories

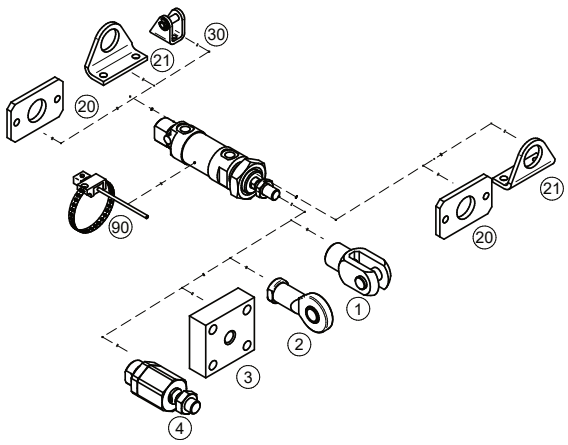

Mounting accessories	... see page
1 Piston rod clevis	... 4-2
2 Piston rod eye	... 4-3
3 Flanged piston rod coupling	... 4-2
4 Self-aligning piston rod coupling	... 4-3
20 Flange mounting	... 4-20
21 Foot mounting	... 4-20
30 Swivel flange	... 4-20
90 Prox. switch	

DOUBLE ACTING PNEUMATIC CYLINDERS, SERIES MCKMI, WITH NON-ROTATING ROD

STRÁNSKÝ A PETRŽÍK

A series of cylinders with a piston rod secured against spontaneous rotation. The piston rod has a hexagonal shape and may only be loaded up to the permitted torque value. Magnet for proximity switches is standard, fully adjustable cushioning at end of stroke is optional.

Working pressure	0,5 MPa
Min. pressure	0,05 MPa
Max. pressure	0,7 MPa
Temp. range	-5°C to +60°C
Working medium	modified compressed air

Piston diameter [mm]	20	25	32	40
Thrust at 0,5 MPa [N]	141	221	362	566
Return force at 0,5 MPa [N]	111	173	294	473
Connection	G1/8“	G1/8“	G1/8“	G1/4“
Length of adjustable cushioning [mm]	15	13	10	21
Max. stroke [mm]	300	500	500	500
Working speed [mm/s]	50 to 750			
Allowable rotational torque at piston rod [Nm]	0,2	0,24	0,24	0,44
Rod non-rotating accuracy [°]	±0,7	±0,7	±0,5	±0,5
Weight 0 mm stroke [kg]	0,14	0,22	0,29	0,58
Weight add. per 1 mm stroke [kg]	0,0008	0,0012	0,0016	0,0022

Order codes

P MCKMB - 11 - 40 - 100 -A -N -G

Piston ø	
20	20 mm
25	25 mm
32	32 mm
40	40 mm

Stroke	
xxx	mm of stroke, e.g. 100 = stroke 100 mm - see allowed combination below

Piston ø [mm]	Standard stroke [mm]*
20, 25, 32, 40	25, 50, 75, 100, 125, 150, 200, 250, 300

*) Other strokes are possible, please contact our technical department.

Cushioning	
	without
-A	with adjustable cushioning

End cap style	
	non-pivot type with thread 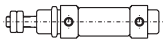
-N	plain end 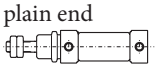
-E	pivot type 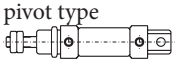

In case of proximity sensing request, please contact our technical department.

Caution

Please don't attempt to rotate the piston rod.

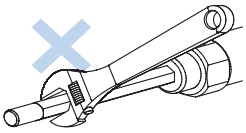

Construction / materials

- caps, piston: aluminium alloy
- tube: stainless steel
- piston rod: stainless steel
- sealing: NBR
- nuts: carbon steel

Dimensions

Non-pivot end cap with thread

*) FL: effective thread length

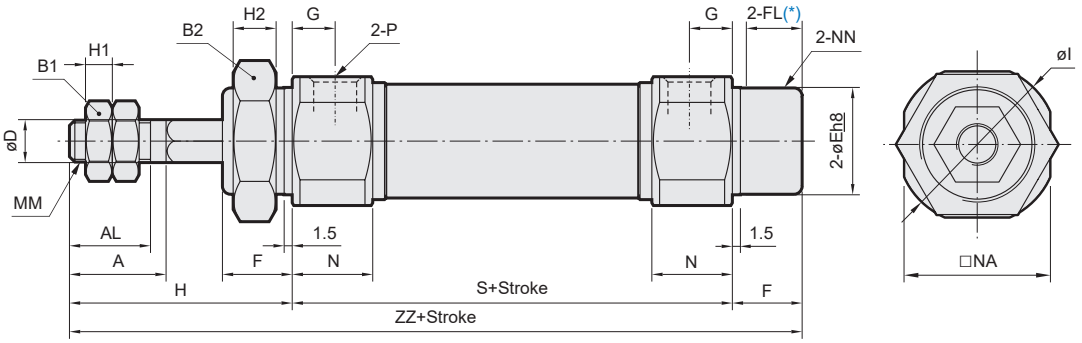

∅	A	AL	B1	B2	D	E	F	FL	G	H	H1	H2	I	MM	N	NA	NN	P	S	ZZ
20	18	15,5	13	26	8	20	13	10,5	8	41	5	8	28	M8	15	24	M20x1,5	G1/8“	62	116
25	22	19,5	17	32	10	26	13	10,5	8	45	6	8	33,5	M10x1,25	15	30	M26x1,5	G1/8“	62	120
32	22	19,5	17	32	12	26	13	10,5	8	45	6	8	37,5	M10x1,25	15	34,5	M26x1,5	G1/8“	64	122
40	24	21	22	41	14	32	16	13,5	11	50	8	10	46,5	M14x1,5	21,5	42,5	M32x2	G1/4“	88	154

Plain end cap type

*) FL: effective thread length

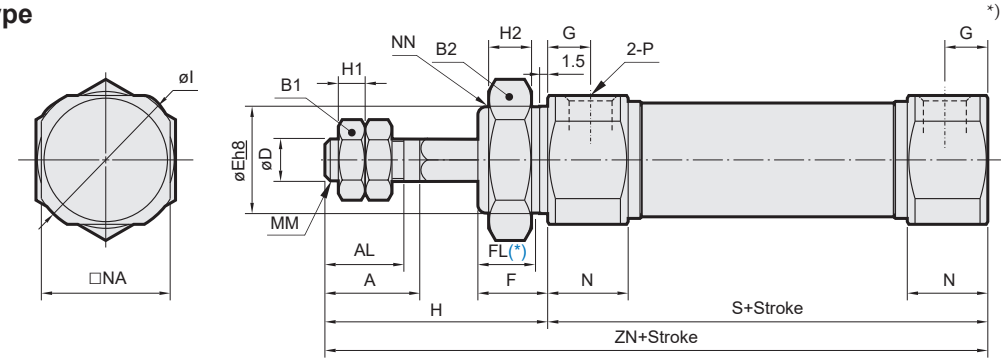

∅	A	AL	B1	B2	D	E	F	FL	G	H	H1	H2	I	MM	N	NA	NN	P	S	ZN
20	18	15,5	13	26	8	20	13	10,5	8	41	5	8	28	M8	15	24	M20x1,5	G1/8“	62	103
25	22	19,5	17	32	10	26	13	10,5	8	45	6	8	33,5	M10x1,25	15	30	M26x1,5	G1/8“	62	107
32	22	19,5	17	32	12	26	13	10,5	8	45	6	8	37,5	M10x1,25	15	34,5	M26x1,5	G1/8“	64	109
40	24	21	22	41	14	32	16	13,5	11	50	8	10	46,5	M14x1,5	21,5	42,5	M32x2	G1/4“	88	138

Pivot type end cap

*) FL: effective thread length

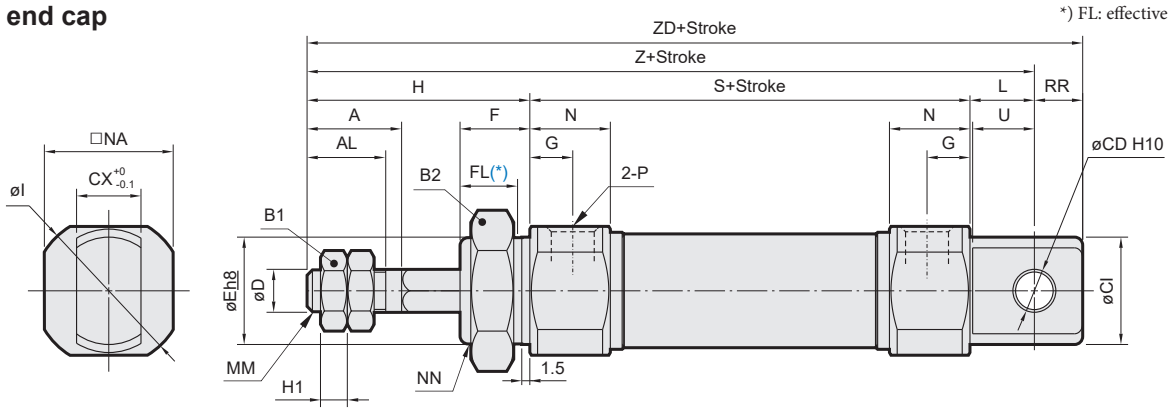

∅	A	AL	B1	B2	CD	CI	CX	D	E	F	FL	G	H	H1	I	L	MM	N	NA	NN	P	PR	S	U	Z	ZD
20	18	15,5	13	26	8	20	12	8	20	13	10,5	8	41	5	28	12	M8	15	24	M20x1,5	G1/8“	9	62	11,5	115	124
25	22	19,5	17	32	8	22	12	10	26	13	10,5	8	45	6	33,5	12	M10x1,25	15	30	M26x1,5	G1/8“	9	62	11,5	119	128
32	22	19,5	17	32	10	27	20	12	26	13	10,5	8	45	6	37,5	15	M10x1,25	15	34,5	M26x1,5	G1/8“	12	64	14,5	124	136
40	24	21	22	41	10	33	20	14	32	16	13,5	11	50	8	46,5	15	M14x1,5	21,5	42,5	M32x2	G1/4“	12	88	14,5	153	165

DOUBLE ACTING PNEUMATIC CYLINDERS SHORT STROKE WITH GUIDE WITH SLIDE BEARINGS

STRÁNSKÝ A PETRŽÍK

Pneumatic cylinder may be used, when small mounting dimensions are required. The cylinders can work in higher temperatures by request. There is no cushioning at end of stroke. This design features a torque resistant guide system to prevent piston rod rotation. Guiding rods are mounted in slide bearings without clearance.

Working pressure	0,6 MPa
Min. pressure	0,15 MPa
Max. pressure	1,0 MPa
Temp. range	-20°C to +80°C *
Working medium	modified compressed air

*) values are valid for standard gaskets

Piston diameter [mm]	20	25	32	40	50	63	80	100	160
Thrust at 0,6 MPa [N]	188	295	482	754	1178	1870	3015	4713	12064
Return force at 0,6 MPa [N]	158	248	415	662	1025	1717	2720	4484	11309
Connection	M5	G1/8“	G1/8“	G1/8“	G1/8“	G1/8“	G1/4“	G1/4“	G3/8“
Max. stroke [mm] *	50*	50*	50*	50*	50*	50*	50*	50*	60*
Weight 0 mm stroke [kg]	0,20	0,25	0,30	0,37	0,50	0,69	1,46	1,78	13,5
Weight add. per 1 mm stroke [kg]	0,0023	0,0037	0,0053	0,0075	0,012	0,018	0,022	0,028	0,100

*) Stroke of cylinder may be longer after agreement with our technical dept.

Order codes

12517 11 00 050 0010

Type	
12517	short stroke with guide with slide bearings, double acting

Equipment	
01	w/o magnet
11	with magnet

Options	
00	without options
10	Viton® piston rod sealing
11	Viton® gaskets (up to 180°C)
14	1.4301 stainless steel piston rod

For more options regarding materials or dimensions, please contact our technical dept.

Piston diameter	
020	20 mm
025	25 mm
032	32 mm
040	40 mm
050	50 mm
063	63 mm
080	80 mm
100	100 mm
160	160 mm

Stroke / Repair kit	
xxxx	mm of stroke e.g.: 0010 = stroke 10 mm
9999	repair kit

Useful load

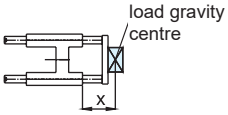

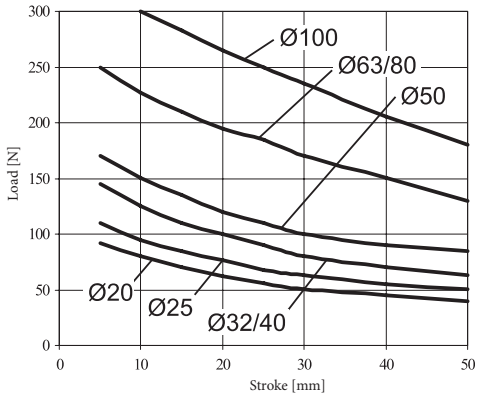

Construction / materials

- caps: anodized dural
- body: drawn dural profile, anodized, piston dia. 160 mm: aluminium casting
- piston rod and guiding rods: grounded round steel bar CK45 with hard chrome plated surface
- flange: zinc plated steel
- guiding rods are mounted in slide bearings

Dimensions

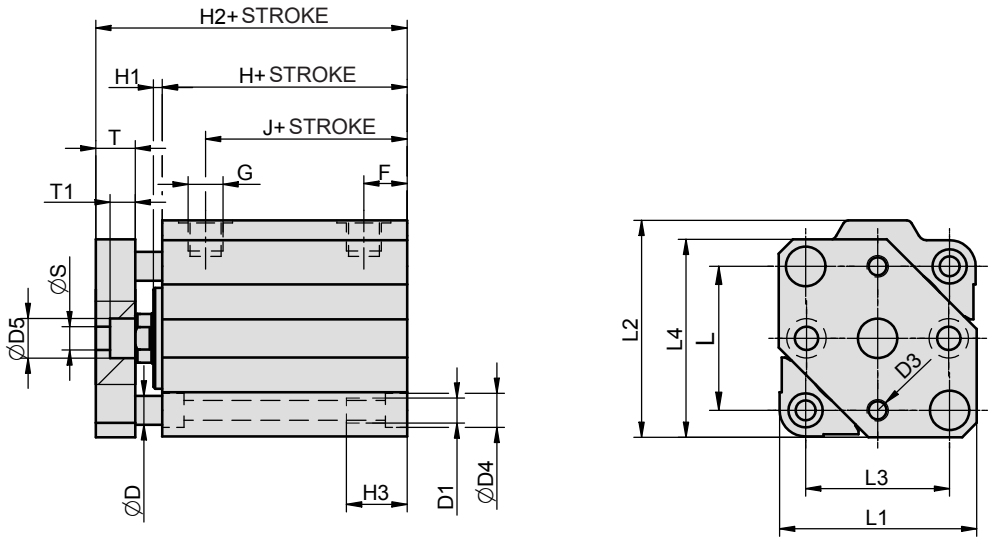

Ø	D	D1	D3	D4	D5	F	G	H	H1	H2	H3	J	L	L1	L2	L3	L4	S	T	T1
20	5	M5	M4	7 depth 5	8	9	M5	28	2,5	44,5	15	19	22	32	35	22	32	4,5	9	5
20M	5	M5	M4	7 depth 5	8	9	M5	53,5	2,5	70	15	44,5	22	32	35	22	32	4,5	9	5
25	6	M5	M4	8 depth 5	8	10	G1/8“	32	2,5	48,5	15	22	28	38	44,5	26	39	4,5	9	5
25M	6	M5	M4	8 depth 5	8	10	G1/8“	46	2,5	62,5	15	22	28	38	44,5	26	39	4,5	9	5
32	8	M6	M5	9,5 depth 6	10	11	G1/8“	40	2,5	57,5	18	29	36	45	54	32	48	5,5	10	6
32M	8	M6	M5	9,5 depth 6	10	11	G1/8“	52	2,5	69,5	18	41	36	46	54	32	48	5,5	10	6
40	8	M6	M6	9,5 depth 6	11	12	G1/8“	48	2,5	66,5	18	36	40	55	60	40	55	6,5	11	7
50	10	M8	M6	11 depth 8	11	13	G1/8“	49	2,5	70,5	24	36	50	65	73	50	65	6,5	13	7
63	12	M10	M8	14 depth 8,5	15	14,5	G1/8“	47	3,5	69,5	24,5	32,5	62	80	88	62	80	8,5	13	9
80	12	M10	M8	14 depth 8,5	15	16,5	G1/4“	52	3,5	76,5	24,5	34,5	82	100	109	82	100	8,5	15	9
80M	12	M10	M8	14 depth 8,5	15	16,5	G1/4“	57	3,5	81,5	24,5	39,5	82	100	109	82	100	8,5	15	9
100	14	M12	M8	17 depth 11	15	20	G1/4“	60	6	89	29	40	103	124	134	103	124	8,5	17	9
100M	14	M12	M8	17 depth 11	15	20	G1/4“	62	6	91	29	42	103	124	134	103	124	8,5	17	9
160	22	M20	M12	26 depth 21	20	22,5	G3/8“	96	-	137	45	73,5	154	200	210	154	200	13	24	13

Notice: M after piston diameter size means cylinder with magnetic piston.

Mounting accessories

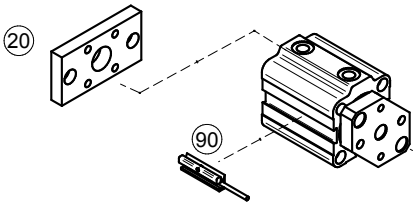

Mounting accessories	... see page
20 Flange mounting	... 4-29
90 Prox. switch	... 3-2, 3-4

DOUBLE ACTING PNEUMATIC CYLINDERS SERIES MCGS TWIN GUIDE

STRÁNSKÝ A PETRŽÍK

Cylinders series MCGS are due to heavy integrated bearing predetermined for applications, where is lateral load or torsional moment. It is possible to use them as stopper cylinders, where the slide bearing is used, or as push or lift cylinders, where the linear bush bearing is used. Cylinders are equipped with magnet for proximity switches. There is no adjustable cushioning, for cushioning at the end positions the rubber pad is used. Cylinders series MCGS are with compact design. The air connection is possible from two sides (from the top and side).

Working pressure	0,6 MPa
Min. pressure	0,1 MPa
Max. pressure	1,0 MPa
Temp. range	-5°C to +60°C
Working medium	modified compressed air

Piston diameter [mm]	12	16	20	25	32	40	50	63
Thrust at 0.6 MPa [N]	66	121	188	295	482	754	1178	1870
Return force at 0.6 MPa [N]	50	90	141	226	361	633	989	1681
Connection	M5	M5	G1/8“	G1/8“	G1/8“	G1/8“	G1/4“	G1/4“
Max. stroke [mm]	250*	250*	400*	400*	400*	400*	400*	150*

*) Please consult our technical dept. if you require other than standard stroke (see table below)

Order codes

P MCGS 03 12 50

Type	
MCGS	double acting, twin guide, with magnetic piston

Purpose / Bearing type	
03	stop / slide bearing
23	push - lift / linear bush bearing

Piston diameter	
12	12 mm
16	16 mm
20	20 mm
25	25 mm
32	32 mm
40	40 mm
50	50 mm
63	63 mm

Stroke / Repair kit	
xxxx	mm of stroke e.g.: 50 = stroke 50 mm, see table of standard strokes
-RK	repair kit

Piston ∅ [mm]	Standard stroke [mm]*
12, 16	10, 20, 30, 40, 50, 75, 100, 125, 150, 175, 200, 250
20, 25	20, 30, 40, 50, 75, 100, 125, 150, 175, 200, 250, 300, 350, 400
32, 40, 50	25, 50, 75, 100, 125, 150, 175, 200, 250, 300, 350, 400
63	25, 50, 75, 100, 125, 150

*) Please consult us if stroke is out of specification

Using as stopper cylinder

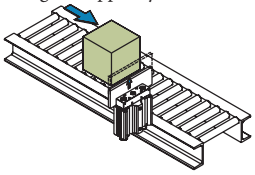

Using as lifting cylinder

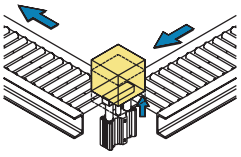

Using as pushing cylinder

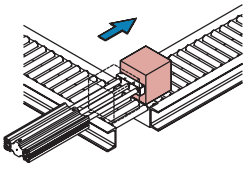

More examples of using:

Arranging in line

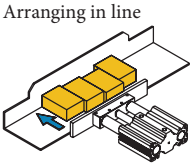

Draws in

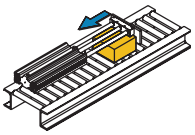

Arranges the posture

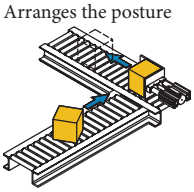

Cuts sheets

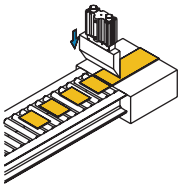

Installation of proximity switch

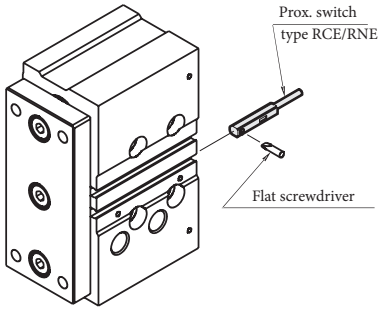

Construction / materials

- caps: steel, anodized aluminium for piston dia. 40 mm and more
- body: drawn aluminium alloy
- piston rod: stainless steel, carbon steel for piston dia. 25 mm and more
- guide rods: carbon steel
- plate: steel
- bearing: brass alloy for slide bearing, linear bush bearing

In case of proximity sensing request, please use switches series RCE/RPE/RNE - see page 3-8 for detail

Allowable load

Allowable lateral load

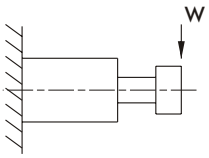

Shows the dynamic allowable value, when actuating the cylinder with lateral load W at the guide rod's top (vertical load against the guide rods).

Stroke	Type	Piston diameter 12	16	20	25	32	40	50	63
10	03	31	50	—	—	—	—	—	—
	23	23	36	—	—	—	—	—	—
20	03	24	39	51	68	—	—	—	—
	23	17	29	43	67	—	—	—	—
25	03	—	—	—	—	165	203	296	296
	23	—	—	—	—	104	113	120	117
30	03	19	32	44	59	—	—	—	—
	23	14	24	36	56	—	—	—	—
40	03	16	27	39	52	—	—	—	—
	23	34	59	98	148	—	—	—	—
50	03	13	24	35	46	129	164	245	245
	23	30	52	87	132	74	78	83	81
75	03	37	54	54	72	106	182	273	273
	23	23	40	69	105	165	129	178	176
100	03	31	45	46	61	90	159	241	241
	23	19	33	57	87	138	106	148	145
125	03	15	27	74	98	138	142	216	216
	23	12	20	46	70	114	130	148	145
150	03	13	24	66	88	123	127	195	195
	23	11	17	40	62	100	114	129	126
175	03	12	21	59	79	111	190	190	—
	23	9	15	36	55	90	106	106	—
200	03	10	19	54	72	101	174	174	—
	23	8	13	32	50	81	95	95	—
250	03	9	16	28	53	88	150	150	—
	23	6	10	32	42	66	78	78	—
300	03	—	—	24	46	77	132	132	—
	23	—	—	27	36	56	67	67	—
350	03	—	—	21	41	68	118	118	—
	23	—	—	23	30	48	58	58	—
400	03	—	—	19	37	61	106	106	—
	23	—	—	20	27	42	50	50	—

Allowable rotating torque

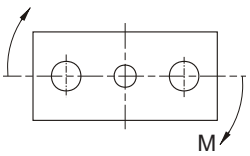

Shows the dynamic allowable value, when actuating the cylinder with a rotating torque M at the guide rod's top.

Stroke	Type	Piston diameter 12	16	20	25	32	40	50	63
10	03	0.64	1.14	—	—	—	—	—	—
	23	0.47	0.84	—	—	—	—	—	—
20	03	0.48	0.90	1.14	2.19	—	—	—	—
	23	0.35	0.66	1.19	2.14	—	—	—	—
25	03	—	—	—	—	6.61	7.00	13.0	14.7
	23	—	—	—	—	4.17	5.24	7.02	7.77
30	03	0.39	0.74	1.21	1.88	—	—	—	—
	23	0.29	0.54	0.99	1.79	—	—	—	—
40	03	0.32	0.63	1.07	1.65	—	—	—	—
	23	0.71	1.35	2.69	4.74	—	—	—	—
50	03	0.28	0.55	0.95	1.47	5.16	5.66	10.8	12.1
	23	0.62	1.19	2.40	4.22	2.95	4.25	5.76	3.35
75	03	0.75	1.23	1.49	2.31	4.23	6.27	12.0	13.5
	23	0.40	0.93	1.89	3.36	6.60	7.19	12.3	13.7
100	03	0.63	1.04	1.25	1.94	3.59	5.48	10.6	12.0
	23	0.38	1.76	1.56	2.78	5.52	6.33	10.9	12.2
125	03	0.15	0.31	2.03	3.15	5.52	4.87	9.50	10.7
	23	0.13	0.23	1.26	2.25	4.56	7.81	11.2	12.5
150	03	0.13	0.27	1.81	2.8	4.93	4.38	8.60	6.69
	23	0.11	0.19	1.10	1.98	4.02	7.11	10.2	11.4
175	03	0.12	0.24	1.63	2.52	4.45	5.21	5.88	—
	23	0.09	0.17	0.98	1.76	3.59	2.93	3.30	—
200	03	0.11	0.22	1.48	2.3	4.06	4.79	5.41	—
	23	0.08	0.15	0.88	1.59	3.24	2.61	2.94	—
250	03	0.09	0.18	0.37	0.85	1.72	4.13	4.66	—
	23	0.07	0.12	0.43	0.68	1.29	2.16	2.43	—
300	03	—	—	0.32	0.74	1.50	3.63	4.09	—
	23	—	—	0.36	0.57	1.09	1.83	2.06	—
350	03	—	—	0.29	0.66	1.33	3.23	3.65	—
	23	—	—	0.31	0.49	0.94	1.58	1.78	—
400	03	—	—	0.26	0.59	1.20	2.92	3.29	—
	23	—	—	0.27	0.42	0.82	1.39	1.57	—

Anti-roll accuracy

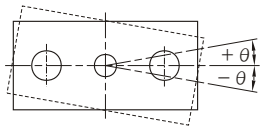

The value are the deflection angle against the piston rod. Deflection of a guide rods is not included.

Type	Piston dia. [mm] 12	16	20
03	±0.09°	±0.08°	±0.08°
23	±0.06°	±0.06°	±0.03°

Type	Piston dia. [mm] 25	32	40
03	±0.07°	±0.07°	±0.06°
23	±0.05°	±0.03°	±0.08°

Type	Piston dia. [mm] 50	63
03	±0.05°	±0.05°
23	±0.06°	±0.06°

Capacity for use as lifter

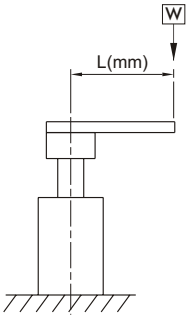

Allowable eccentricity load W [N] for the use as lifter at supply pressure 0.5 MPa.

Type 03 - slide bearing

Stroke 10 to 50 mm

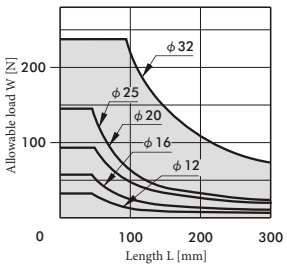

Stroke 75 to 200 mm

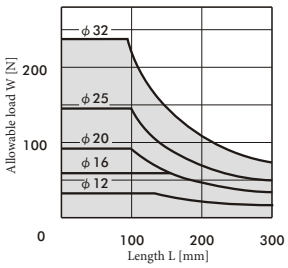

Stroke 25 to 50 mm

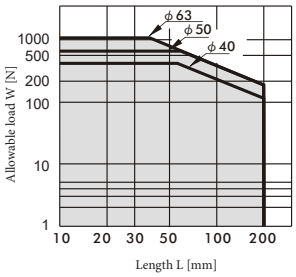

Stroke 75 to 100 mm

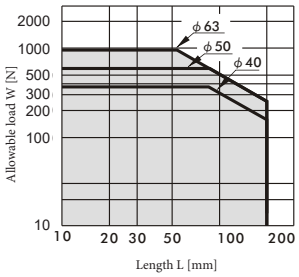

Type 23 - linear bush bearing

Stroke 10 to 50 mm

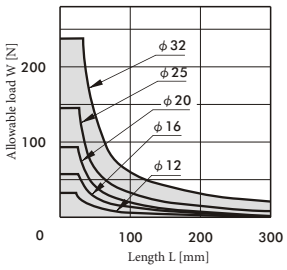

Stroke 75 to 200 mm

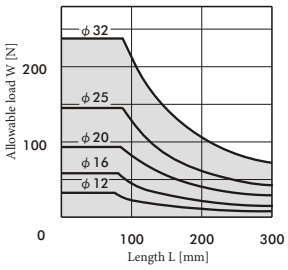

Stroke 25 to 50 mm

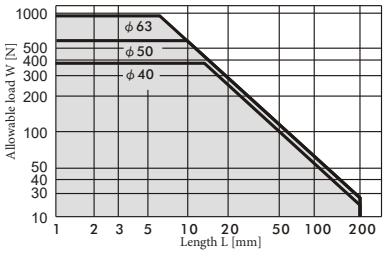

Stroke 75 to 100 mm

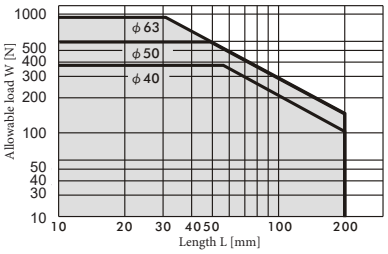

1

Diameters
Piston diameter 12 to 32 mm - series MCGS

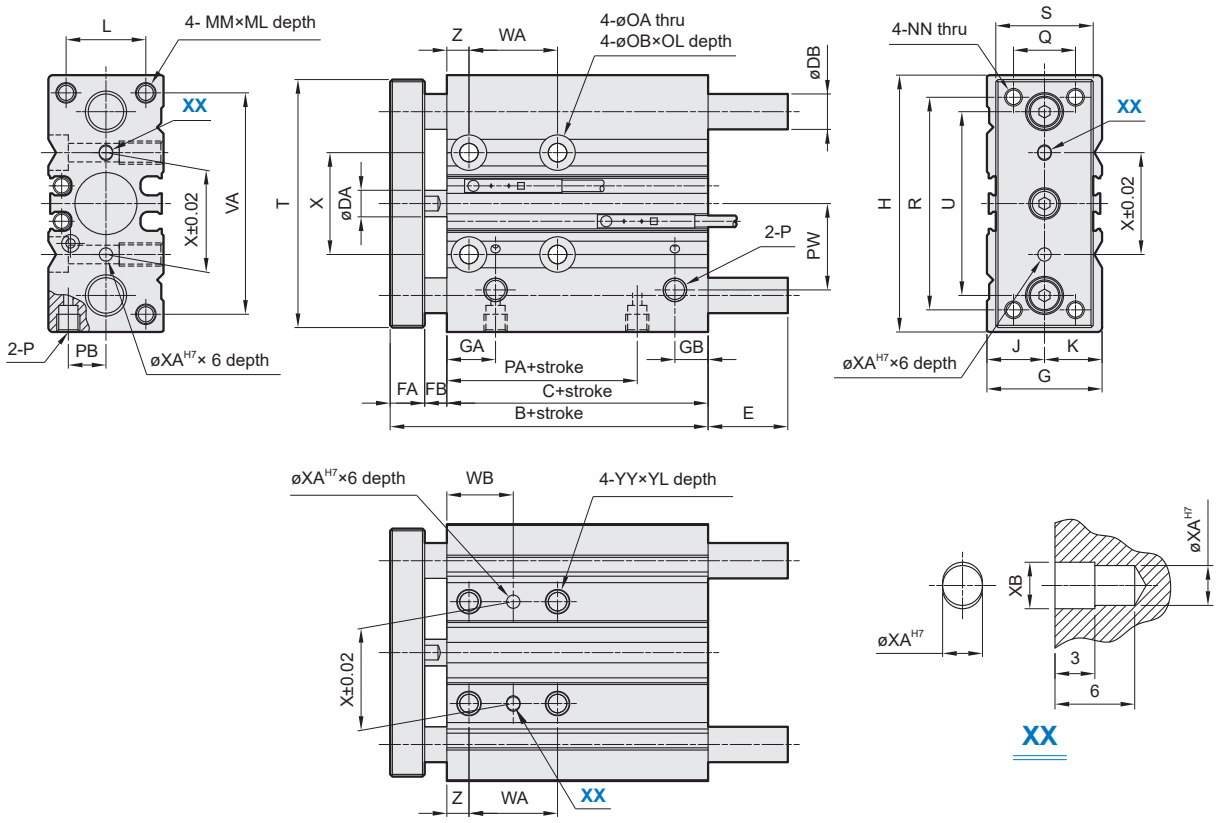

∅	B	C	DA	DB type 03	DB type 23	FA	FB	G	GA	GB	H	J	K	L	MM	ML	NN	OA	OB	OL	P	PA	PB	PW	Q	R	S
12	42	29	6	8	6	8	5	26	11	15*1	58	13	13	18	M4	10	M4	4.3	8	4.5	M5	14	8.5	18	14	48	22
16	46	33	8	10	8	8	5	30	11	18*2	64	15	15	22	M5	12	M5	4.3	8	4.5	M5	15	10	19	16	54	25
20	53	37	10	12	10	10	6	36	10.5	8.5	85	17	19	24	M5	13	M5	5.2	9.5	5.5	G1/8"	12.5	11.5	25	18	70	30
25	53.5	37.5	12	16	13	10	6	42	11.5	9	96	21	21	30	M6	15	M6	5.2	9.5	5.5	G1/8"	12.5	13.5	28.5	26	78	38
32	59.5	37.5	16	20	16	12	10	51	12.5	9	116	26	25	34	M8	20	M8	6.6	11	7.5	G1/8"	7	16	34	30	96	44

*1) for stroke up to 20 mm, the value of GB=7.5 mm
*2) for stroke up to 20 mm, the value of GB=9 mm

∅	T	U	VA	X	XA	XB	YY	YL	Z
12	56	41.5	50	23	3	3.5	M5	10	5
16	62	46	56	24	3	3.5	M5	10	5
20	81	55	72	28	3	3.5	M6	12	17
25	91	65	82	34	4	4.5	M6	12	17
32	110	80	98	42	4	4.5	M8	16	21

∅	WA for stroke					WB for stroke				
	10-39	40-100	125-200	201-300	301-	10-39	40-100	125-200	201-300	301-
12	20	40	110	200	—	15	25	60	105	—
16	24	44	110	200	—	17	27	60	105	—
20	24	44	120	200	300	29	39	77	117	167
25	24	44	120	200	300	29	39	77	117	167

∅	WA for stroke					WB for stroke				
	25-49	50-100	125-200	201-300	301-	25-49	50-100	125-200	201-300	301-
32	24	48	124	200	300	33	45	83	121	171

∅	E type 03, for stroke			
	10-50	51-100	101-200	201-
12	—	18.5	43	43
16	—	18.5	49	49
20	—	31.5	31.5	69
25	—	31.5	31.5	68.5
32	37.5	42.5	42.5	80.5

∅	E type 23, for stroke			
	10-30	31-100	101-200	201-
12	1	13	43	43
16	3	19	49	49
20	10	27	51	69
25	16	32	51	68.5
32	21.5	38.5	58.5	80.5

Piston diameter 40 to 63 mm - series MCGS

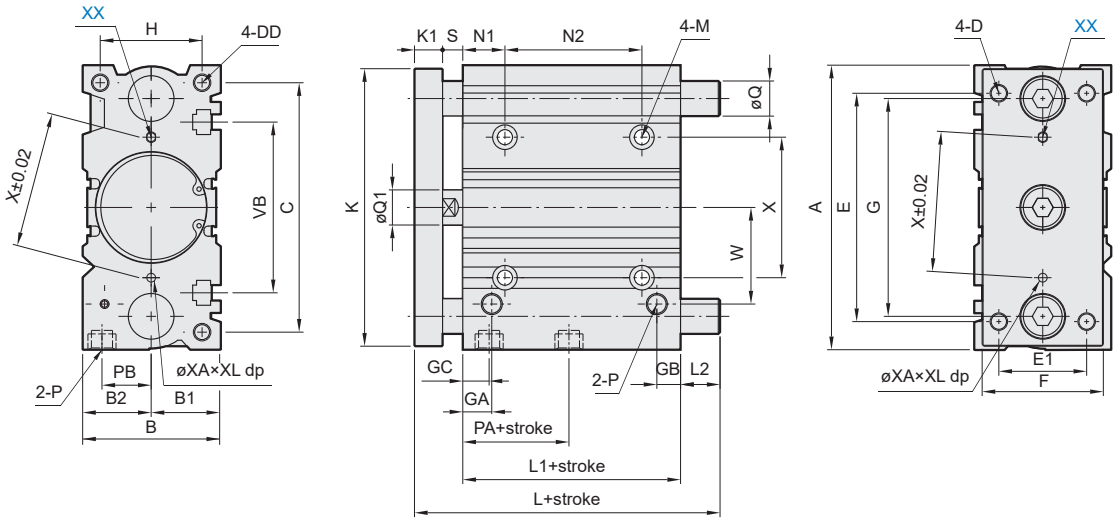

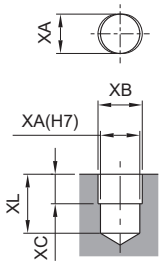

XX

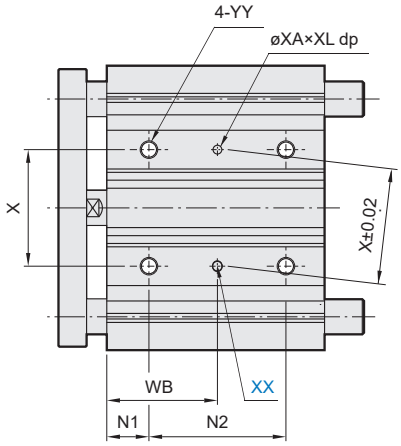

Back side

T slot for hexagon head bolt

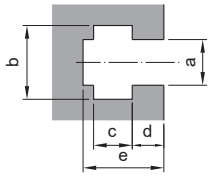

∅	T - slot				
	a	b	c	d	e
40	6,5	10,5	5,5	4	11
50	8,5	13,5	7,5	4,5	13,5
63	11	17,8	10	7	18,5

∅	A	B	B1	B2	C	D	DD	E	E1	F	G	GA	GB	GC	H	K	K1	L1	M	N1	P	PA	PB	Q1	S	VB	W	X
40	120	54	27	27	106	M8	M8 dp. 20	104	30	44	86	14	10	14	40	118	12	44	⌀6.6 thru, ⌀11 dp.7.5	22	G1/8“	13	18	16	10	72	38	50
50	148	64	32	32	130	M10	M10 dp.22	130	40	60	110	14	11	12	46	146	16	44	⌀8.6 thru, ⌀14 dp. 9	24	G1/4“	9	21.5	20	12	92	47	66
63	162	78	39	39	142	M10	M10 dp.22	130	50	70	124	16.5	13.5	16.5	58	158	16	49	⌀8.6 thru, ⌀14 dp. 9	24	G1/4“	14	28	20	12	110	55	80

∅	L type 03, for stroke		L type 23, for stroke			L2 type 03, for stroke			L2 type 23, for stroke				N2 for stroke					Q	Q	WB for stroke				
	25, 50	51-	25, 50	75, 100	101-	25, 50	51-200	201-	25, 50	75, 100	101-200	201-	25	50-100	101-200	201-300	301-	type 03	type 23	25	50-100	101-200	201-300	301-
40	97	102	81	98	118	31	36	63.5	15	32	52	72.5	24	48	124	200	300	20	16	34	46	84	122	172
50	106.5	118	93	114	134	34.5	46	78.5	21	42	62	87.5	24	48	124	200	300	25	20	36	48	86	124	174
63	106.5	118	93	114	134	29.5	41	—	16	37	57	—	28	52	128	—	—	25	20	38	50	88	—	—

∅	XA H7	XB	XC	XL	YY
40	4	4,5	3	6	M8, dp. 16
50	5	6	4	8	M10, dp. 20
63	5	6	4	8	M10, dp. 20

DOUBLE ACTING PNEUMATIC CYLINDERS SERIES MCGD TWIN GUIDE, SLIDE

STRÁNSKÝ A PETRŽÍK

1

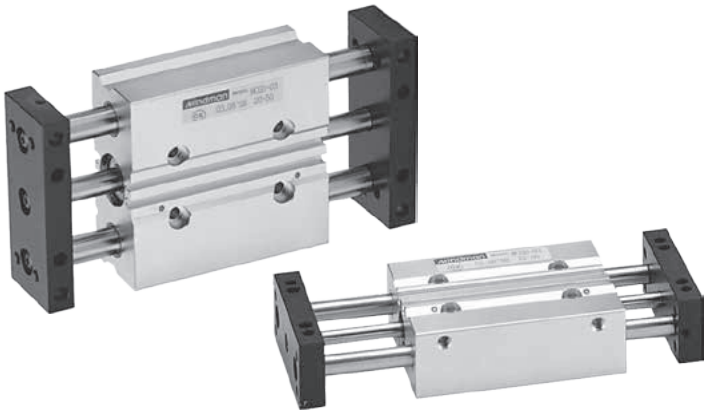

Cylinders series MCGD can be used as cylinders with slide plates or body slide. Cylinders series MCGD are designed as compact makes the ari cylinder working more smoothly and showing the characteristics of its high-strength and high-stiffness. Cylinders are equipped with magnet for proximity switches. The recessed groove for sensor switch keeps space saving and interference is avoided. The body and plate are reserved with many holes and threads for mounting. It is suitable for various mounting requirement. There is no adjustable cushioning, for cushioning at the end positions the rubber pad is used.

Working pressure	0,6 MPa
Min. pressure	0,1 MPa
Max. pressure	1,0 MPa
Temp. range	-5°C to +60°C
Working medium	modified compressed air

Piston diameter [mm]	12	16	20	25	32
Thrust at 0.6 MPa [N]	50	102	158	248	415
Return force at 0.6 MPa [N]	50	102	158	248	415
Connection	M5	M5	G1/8“	G1/8“	G1/8“
Max. stroke [mm]	100	150	150	150	250

Order codes

P MCGD 03 12 50

Type	
MCGD	double acting, twin guide, with magnetic piston, slide

Bearing type	
03	slide bearing
23	linear bush bearing

Piston diameter	
12	12 mm
16	16 mm
20	20 mm
25	25 mm
32	32 mm

Stroke / Repair kit	
xxxx	mm of stroke e.g.: 50 = stroke 50 mm
-RK	repair kit

Piston dia. [mm]	Bearing type	Standard stroke [mm]*								
		30	50	75	100	125	150	175	200	250
12	03	●	●	●	●					
16, 20, 25		●	●	●	●	●	●			
32		●	●	●	●	●	●	●	●	●
12	23	●	●	●	●					
16, 20		●	●	●	●	●	●			
25			●	●	●	●	●			
32			●	●	●	●	●	●	●	●

*) Please consult us if stroke is out of specification

Installation of proximity switch

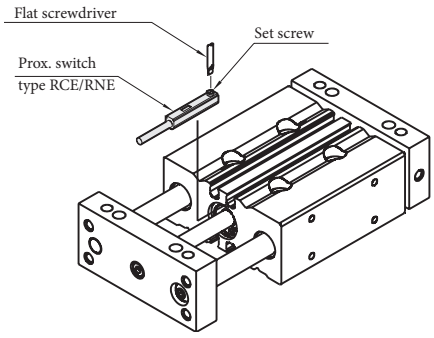

Construction / materials

- caps: aluminium alloy
- body: aluminium alloy
- piston rod: carbon steel
- guide rods: carbon steel for slide bearing, bearing steel for linear bush bearing
- plate: aluminium alloy
- bearing: copper for slide bearing, linear bush bearing

In case of proximity sensing request, please use switches series RCE/RPE/RNE - see page 3-8 for detail

Dimensions

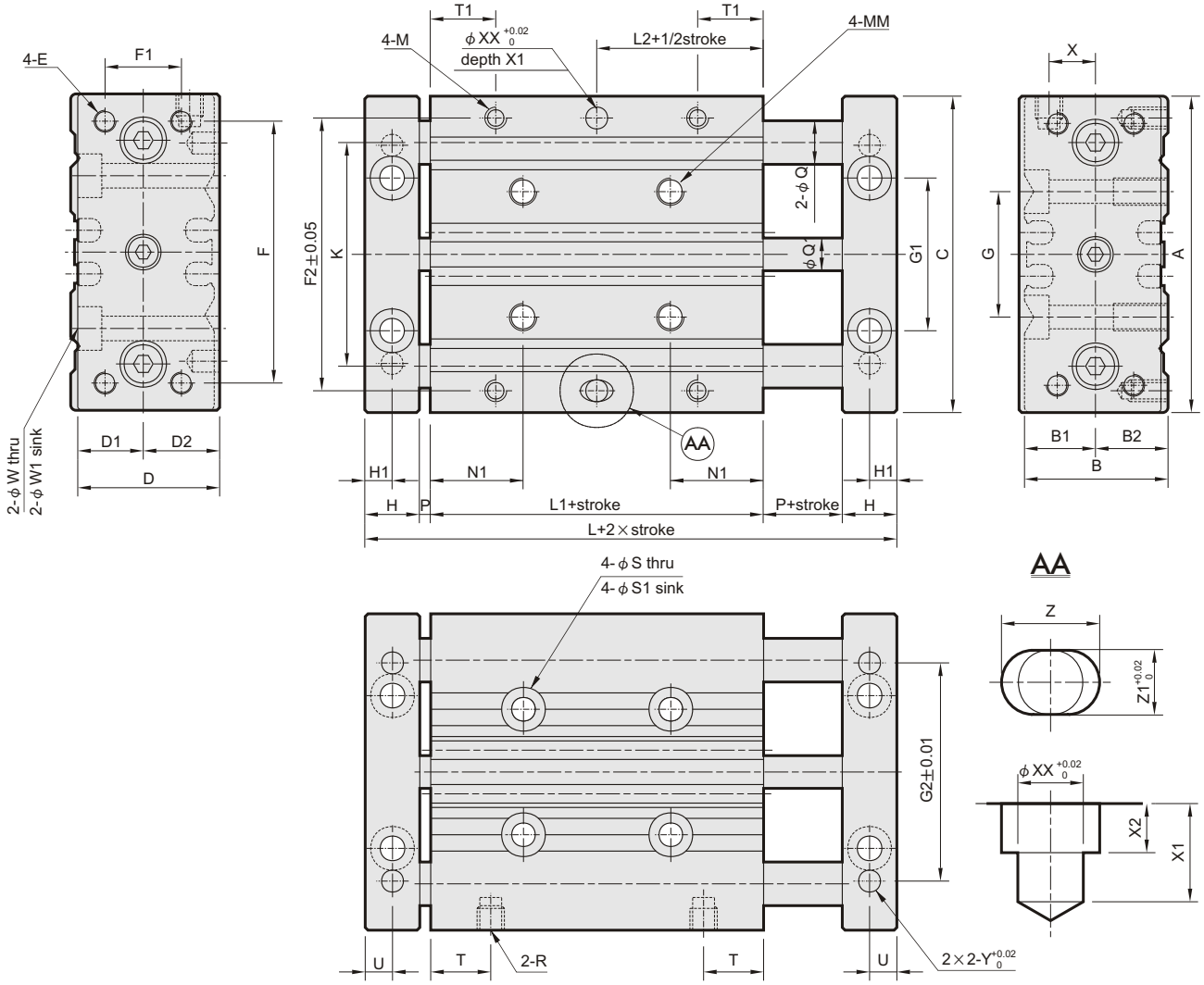

∅	A	B	B1	B2	C	D	D1	D2	E	F	F1	F2	G	G1	G2	H	H1	K	L	L1	L2	M	MM	N1	Q (type 03)	Q (type 23)	Q1	P	R
12	58	26	13	13	58	26	12	14	M4	48	14	50	23	28	40	10	5	41.5	55	31	15.5	M4 dp. 7	M5 dp. 10	17	8	6	6	2	M5
16	64	30	15	15	64	30	14	16	M5	52	16	54	24	32	50	12	6	46	62	34	17	M5 dp. 7	M5 dp. 10	17	10	8	8	2	M5
20	85	36	19	17	85	36	16	20	M5	60	18	64	28	37	70	12	6	55	66	38	19	M5 dp. 7	M6 dp. 12	20.5	12	10	10	2	G1/8“
25	96	42	21	21	96	42	20	22	M6	70	26	76	34	44	84	12	6	65	67	39	19.5	M6 dp. 9	M6 dp. 12	19.5	16	13	12	2	G1/8“
32	116	51	25	26	116	51	24	27	M8	96	30	100	42	56	76	14	7	80	68	36	18	M8 dp. 11	M8 dp. 16	20	20	16	16	2	G1/8“

∅	S	S1	T	T1	U	W	W1	X	XX	X1	X2	Y	Z	Z1
12	4.3	8 dp. 4.5	11	12	5	4.5	8 dp. 4.5	8.5	4	6	3	∅4 dp. 5	6	4
16	4.3	8 dp. 4.5	11	13	6	4.5	8 dp. 4.5	10	5	6	3	∅5 dp. 5	7	5
20	5.2	9.5 dp. 5.5	13.5	14	6	5.5	9.5 dp. 5.5	11.5	6	8	4	∅6 dp. 8	8	6
25	5.2	9.5 dp. 5.5	11	12	6	5.5	9.5 dp. 5.5	13.5	6	8	4	∅6 dp. 8	8	6
32	6.8	11.5 dp. 6.5	11	16.5	7	6.6	11 dp. 6.5	16	8	12	6	∅8 dp. 12	10	8

DOUBLE ACTING PNEUMATIC CYLINDERS SERIES MCDA DOUBLE PISTON ROD

STRÁNSKÝ A PETRŽÍK

1

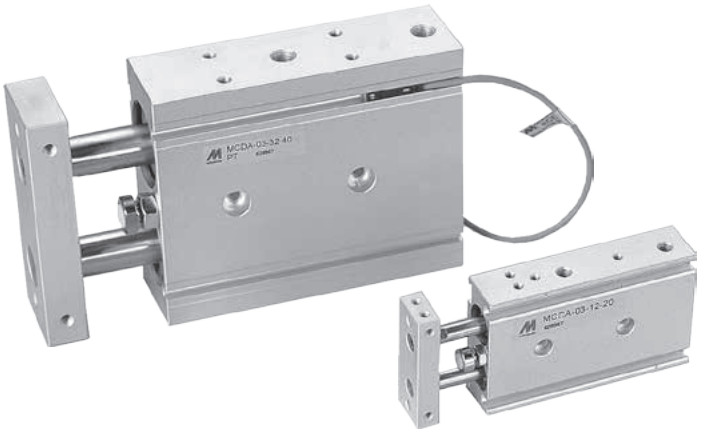

Thin and compact double piston rod cylinders series MCDA with high precision guiding are used not only for precision picking and placing. High lateral load can be applied due to highly accurate slide bearing and linear bush bearing. Cylinders are equipped with magnet for proximity switches. The body and plate are reserved with many holes and threads for mounting. It is suitable for various mounting requirement. There is no adjustable cushioning, for cushioning at the end positions the rubber pad is used.

Working pressure	0,5 MPa
Min. pressure	0,15 MPa for ∅6 0,1 MPa for ∅12 and 16 0,05 MPa for ∅20 to 32
Max. pressure	0,7 MPa
Temp. range	-5°C to +60°C
Working medium	modified compressed air

Piston diameter [mm]	6	12	16	20	25	32
Thrust at 0.6 MPa [N]	34	136	241	377	589	965
Return force at 0.6 MPa [N]	19	102	181	283	453	724
Connection	M5	M5	M5	G1/8“	G1/8“	G1/8“
Max. stroke [mm]	30 (50*)	75	100 (120*)	100 (130*)	100 (150*)	100 (150*)

*) Please consult our technical dept. if you require other than standard stroke (see table below)

Order codes

P MCDA 03 12 50

Type	
MCDA	double acting, double piston rod

Bearing type	
03	slide bearing
23	linear bush bearing

Piston diameter	
06	6 mm
12	12 mm
16	16 mm
20	20 mm
25	25 mm
32	32 mm

Stroke / Repair kit	
xxxx	mm of stroke e.g.: 50 = stroke 50 mm
-RK	repair kit

Piston dia. [mm]	Standard stroke [mm]*														
	10	15	20	25	30	35	40	45	50	60	70	75	80	90	100
6	●		●		●										
12	●	●	●	●	●	●	●	●	●	●	●	●			
16 to 32	●	●	●	●	●	●	●	●	●	●	●	●	●	●	●

*) Please consult us if stroke is out of specification
Note: Each standard stroke is adjustable in range 0 to +5 mm

Various examples of mounting the cylinder:

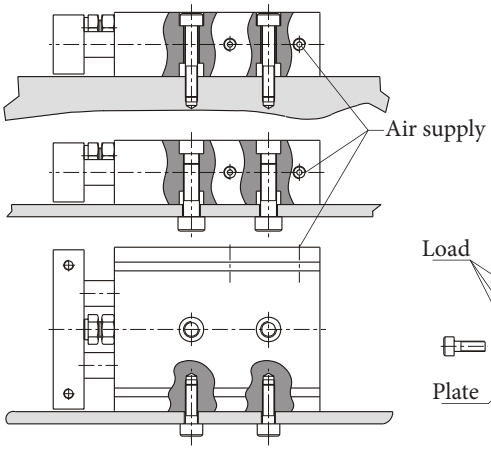

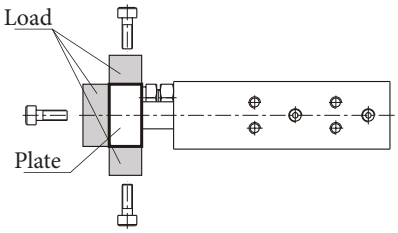

Installation of proximity switch

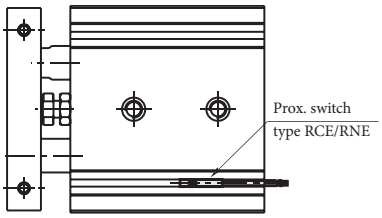

Construction / materials

- caps: aluminium alloy
- body: aluminium alloy
- piston rod (type 03): stainless steel for piston dia. up to 20 mm incl., carbon steel for piston dia. 25 and 32 mm
- piston rod (type 23): bearing steel
- plate: aluminium alloy
- bearing: copper alloy for slide bearing, linear bush bearing

In case of proximity sensing request, please use switches series RCE/RPE/RNE - see page 3-8 for detail

Allowable load

Allowable lateral load

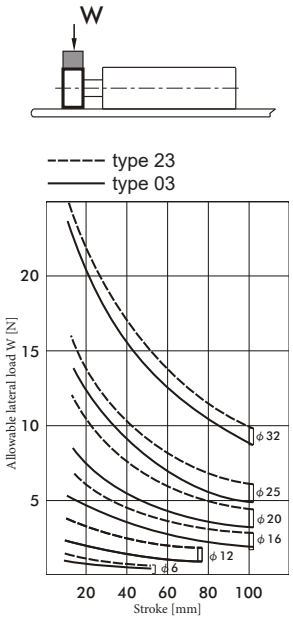

Capacity for use as a pusher

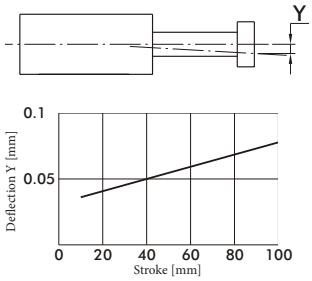

In the actual operation, load at the top should be below the allowable top load.

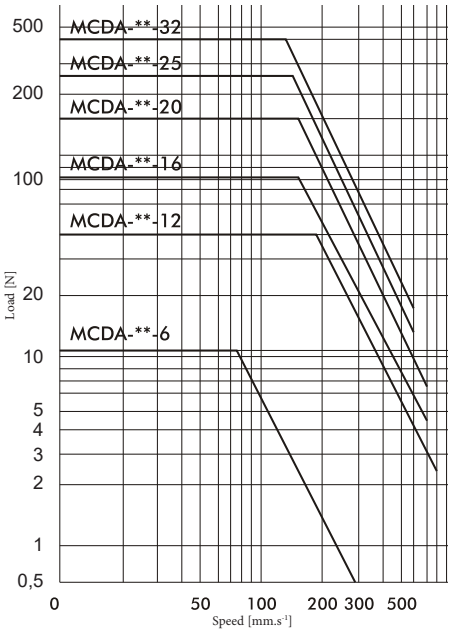

Anti-roll accuracy

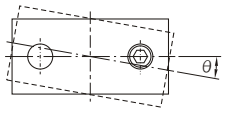

Type	Piston dia. [mm]
	6 to 32
03	±0.1°
23	±0.15°

Dimensions

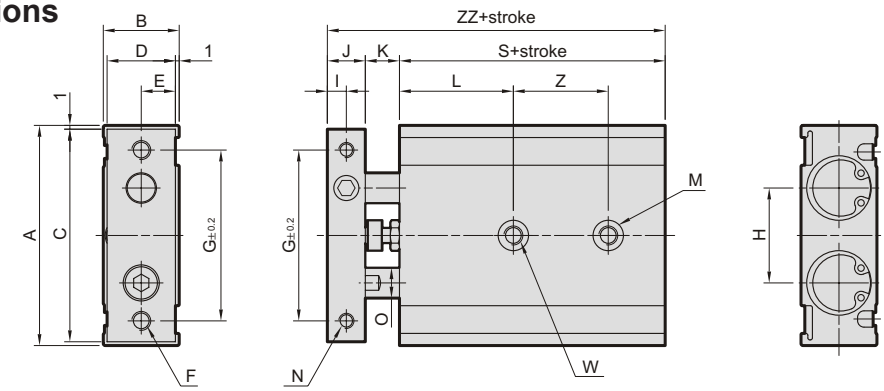

Piston diameter 12 and 16 mm

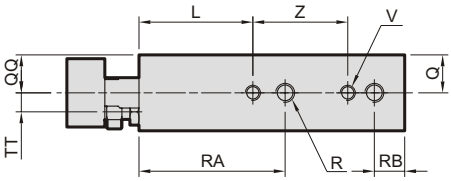

Piston diameter 20 to 32 mm

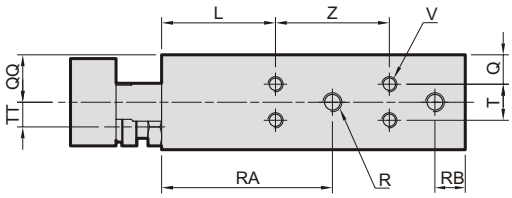

Piston diameter 6 mm

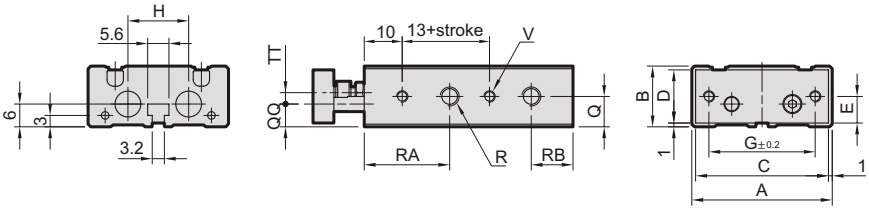

∅	Z (for stroke)				
	10-25	30-50	60-75	80	90-100
6	10+1/2 stroke (10-30mm)				
12	30	40	50	—	—
16	25	35	45	45	55
20	30	40	60	60	60
25	30	40	60	60	60
32	40	50	70	70	70

∅	A	B	C	D	E	F (thru)	G	H	I	J	K	L	M (both sides)	N (both sides)	O	Q	QQ	R (both sides)	RA	RB	S	T	TT	V (both sides)	W (thru)	ZZ
6	37	16	35	14	7	2xM3	28	16	2.75	5.5	8	13	2x∅6.5 dp. 3.3[1)]	2xM3 thru	4	8	6	4xM5	22.5	11	45	—	3	4xM3 dp. 4.5	2x∅3.4	58.5
12	46	18	44	16	8	2xM4	35	19	4	8	9	20	4x∅6.5 dp. 3.3	4xM3 dp. 5	6	9	10	4xM5	30	8	55	—	3.5	4xM3 dp. 4.5	2xM4	72
16	58	20	56	18	9	2xM5	45	25	5	10	9	30	4x∅8 dp. 4.4	4xM4 dp. 6	8	10	10	4xM5	38.5	8	60	—	5	4xM4 dp. 5	2xM5	79
20	64	25	62	23	11.5	2xM5	50	28	6	12	12	30	4x∅9.5 dp. 5.3	4xM4 dp. 6	10	7.75	12.5	4xM5	45	8	70	9.5	6.5	8xM4 dp. 5.5	2xM6	94
25	80	30	78	28	14	2xM6	60	35	6	12	12	30	4x∅11 dp. 6.3	4xM5 dp. 8	12	8.5	15	4xG1/8“	46	9	72	13	9	8xM5 dp. 7.5	2xM8	96
32	98	38	96	36	18	2xM6	75	44	8	16	14	30	4x∅11 dp. 6.3	4xM5 dp. 8	16	9	19	4xG1/8“	56	10	82	20	11.5	8xM5 dp. 7.5	2xM8	112

1) single side only

PNEUMATIC SLIDE CYLINDER SERIES MCSS

STRÁNSKÝ A PETRŽÍK

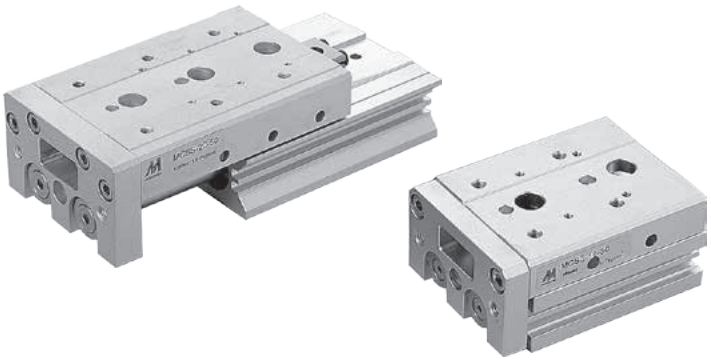

Pneumatic slide cylinder consist of double pneumatic cylinder and integrated work table, which due to the sturdiness and precise of guidance ensures precise positioning. Cylinders are equipped with magnet for proximity switches.

For more information like technical data, allowable load and dimensions, please visit our web page on www.sappv.cz /r/v30e

Working pressure	0,6 MPa
Min. pressure	0,15 MPa
Max. pressure	0,7 MPa
Temp. range	-5°C to +60°C
Working medium	modified compressed air

Piston diameter [mm]	6	8	12	16	20	25
Thrust at 0.6 MPa [N]	34	61	136	241	377	589
Return force at 0.6 MPa [N]	25	45	102	181	283	454
Connection	M3	M5	M5	M5	G1/8“	G1/8“
Max. stroke [mm]	50	75	100	125	150	150
Cushioning at end positions	rubber pads, optionally hydraulic shock absorber for one or both side					

Order codes

P MCSS 20 L 50 B

Type	
MCSS	double acting, double piston

Piston diameter	
06	6 mm
08	8 mm
12	12 mm
16	16 mm
20	20 mm
25	25 mm

Design	
	standard
L	symmetric

Stroke / Repair kit	
xxxx	mm of stroke e.g.: 50 = stroke 50 mm
-RK	repair kit

Piston dia. [mm]	Standard stroke [mm]								
	10	20	30	40	50	75	100	125	150
6	●	●	●	●	●				
8	●	●	●	●	●	●			
12	●	●	●	●	●	●	●		
16	●	●	●	●	●	●	●	●	
20 and 25	●	●	●	●	●	●	●	●	●

Equipment	
	w/o spec. equipment
AS	with stroke adjustment at extension
AT	with stroke adjustment at retract
A	with stroke adjustment at both ends
BS	with shock absorber at extension
BT	with shock absorber at retract
B	with shock absorber at both ends

*) Shock absorber isn't available for piston diameter 6 mm

In case of proximity sensing request, please use switches series RCE/RPE/RNE - see page 3-8 for detail

Examples of mounting the cylinder

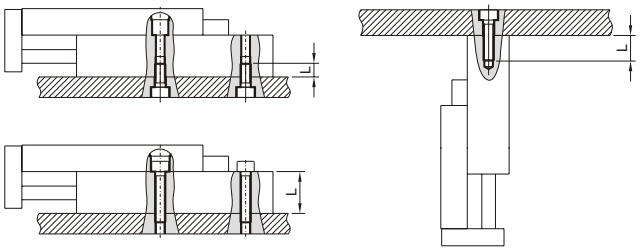

Note: the range of stroke adjustment is 5 mm as standard, ranges 15 and 25 mm are optional.

Equipment A, AS and AT:

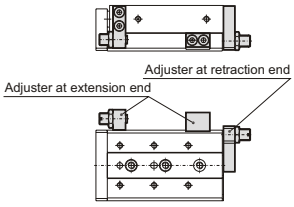

Equipment B, BS and BT:

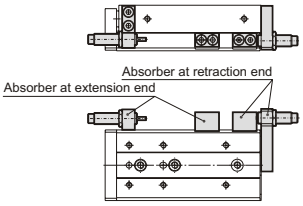

Examples of mounting the load

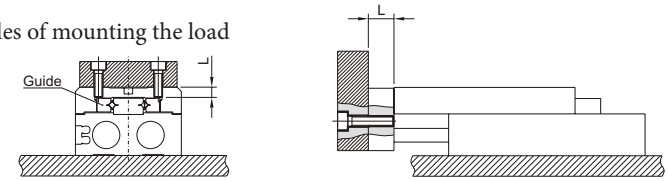

PNEUMATIC STOPPER CYLINDER SERIES MSBE, MSBR AND MSBS

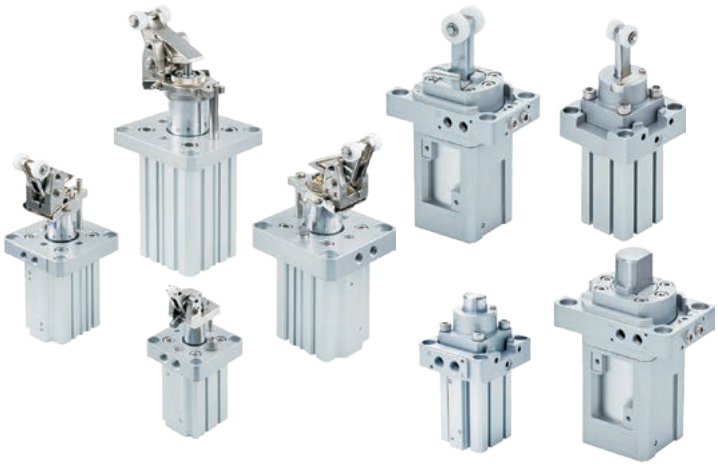

Stopper cylinders are used for safety stop or separation of objects which moves on belt, roller, chain or other conveyor. Regarding the series (see description below), the cylinders can be equipped for example with hydraulic shock absorber for soft stop of moving object, or with spring for automatic separation of two objects.

For more information like technical data, order codes, allowable load and dimensions, please visit our web page on www.sappv.cz/r/v31e , www.sappv.cz/r/v32e or www.sappv.cz/r/v33e

Working pressure	0,6 MPa
Min. pressure	0,2 MPa
Max. pressure	1,0 MPa
Temp. range	-5°C to +60°C
Working medium	modified compressed air

Series	**MSBE**				**MSBR**			
Type	double acting with spring and shock absorber				single acting (spring extended) with roller			
Piston diameter / stroke [mm]	∅ 32 / 20	∅ 50 / 30	∅ 63 / 30	∅ 80 / 40	∅ 20 / 20	∅ 32 / 20	∅ 40 / 30	∅ 50 / 30
Magnet for position sensing	yes	yes	yes	yes	yes	yes	no	no
Picture	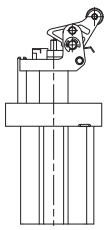	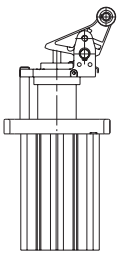			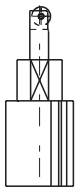	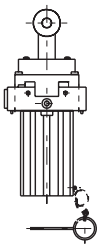	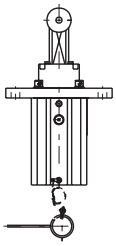	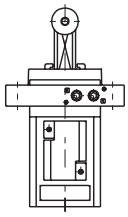

Series	**MSBS**		
Type	double acting for direct stop		
Piston diameter / stroke [mm]	∅ 20 / 10	∅ 32 / 20	∅ 50 / 30
Magnet for position sensing	yes	yes	yes
Picture	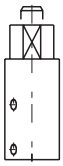	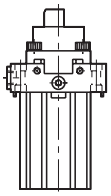	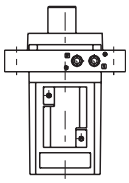

In case of proximity sensing request, please contact our technical dept. for details

With shock absorber

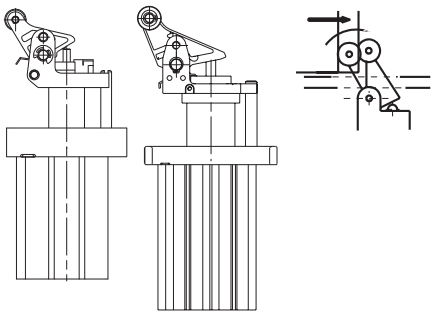

The built-in shock absorber softly catches and stops the work carrier. The strength of absorber can be easily adjusted, which makes the cylinder work in the best condition, conforming to the speed of the conveyor line and the weight of the work carrier.

With roller

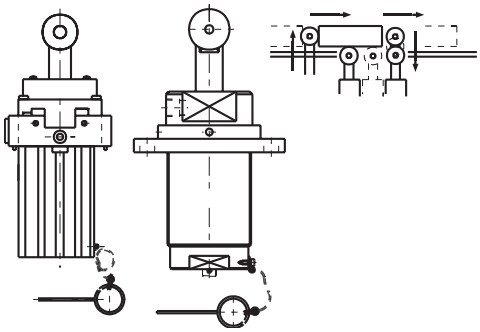

The top rollers with the built-in spring return in touch with the bottom of the work carrier. Automatically returns up to the original position as the work carrier pass by, and immediately works as a stopper for the next work carrier. Therefore the timing carriers does not need to be taken.

For direct stop

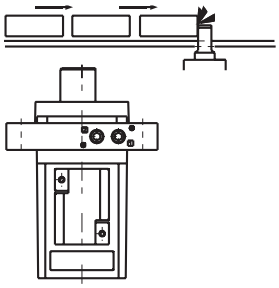

Rod and cylinder are designed for toughness against the large side load. Also suitable for the relatively slow-moving conveyor line with the heavy work carriers.

SINGLE ACTING PNEUMATIC CYLINDERS VDMA 24562, NF E 49003.1

STRÁNSKÝ A PETRŽÍK

Cylinders are designed to meet the specifications of international standards ISO 6431, VDMA 24562 and NF E 49003.1, that is why it can replace pneumatic cylinder, which is made by any producer to these standards. The cylinders can work in higher temperatures by request. There is no cushioning at the end of stroke.

Working pressure	0,6 MPa
Min. pressure	0,15 MPa
Max. pressure	1,0 MPa
Temp. range	-20°C to +80°C
Working medium	modified compressed air

Piston diameter [mm]	32	40	50	63	80	100
Thrust at 0.6 MPa [N]*	482	754	1178	1870	3015	4713
Return force at 0.6 MPa [N]*	415	633	990	1682	2720	4418
Spring restoring force [N]	42	42	66	66	70	74
Connection	G1/8“	G1/4“	G1/4“	G3/8“	G3/8“	G1/2“
Max. stroke [mm]	50	50	70	70	70	70
Weight 0 mm stroke [kg]	0.54	0.80	1.10	1.70	2.70	4.20
Weight add. per 1 mm stroke [kg]	0.0028	0.0037	0.0060	0.0062	0.0100	0.0110

*) Cylinder will make out either thrust or return force, accordingly to the type (spring return / extend).

Order codes

10105 10 00 050 0010

Type	
10105	to DIN ISO 6431, VDMA 24562, NF E 49003.1, single acting, spring return
10106	to DIN ISO 6431, VDMA 24562, NF E 49003.1, single acting, spring extend

Equipment	
00	w/o magnet
10	with magnet

Options	
00	without options
05	all parts stainless steel, piston rod 1.4401
10	Viton® piston rod sealing
13	tie rod version
14	1.4301 stainless steel piston rod
16	steel parts from stainless 1.4301 piston rod stainless 1.4401
37	composite round tube+opt. 10 and 16

For more options regarding materials or dimensions, please contact our technical dept.

Piston diameter	
032	32 mm
040	40 mm
050	50 mm
063	63 mm
080	80 mm
100	100 mm

Stroke / Repair kit	
xxxx	mm of stroke e.g.: 0010 = stroke 10 mm
9999	repair kit

Construction / materials

- caps: drawn dural profile, anodised, piston dia. 100: aluminium casting, anodised
- body: drawn dural profile, anodized
- piston rod: grounded round steel bar CK45 with hard chrome plated surface

Dimensions

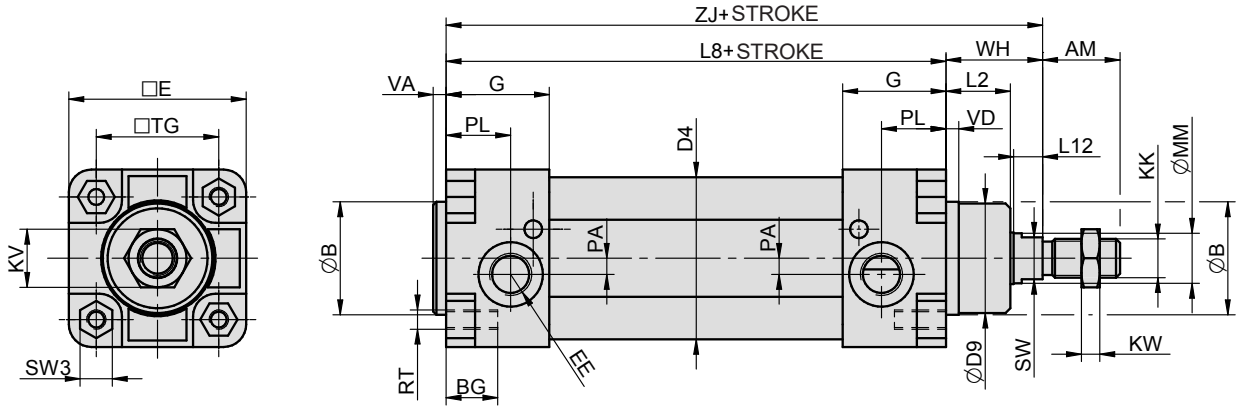

∅	AM	B	BG	D4	D9	E	EE	G	KK	KV	KW	L2	L8	L12	MM	PA	PL	RT	SW	SW3	TG	VA	VD	WH	ZJ
32	22	30	16	36	28	48	G1/8“	31.5	M10x1.25	17	6	18	94	8	12	5	22.5	M6	10	10	32.5	4	4	26	120
40	24	35	16	45	34	55	G1/4“	32	M12x1.25	19	10	20	105	9	16	5	20	M6	13	10	38	4	4	30	135
50	32	40	19	55	39	65	G1/4“	30	M16x1.5	24	8	22	106	10	20	3	17	M8	16	14	46.5	4	5	37	143
63	32	45	19	68	44	75	G3/8“	30	M16x1.5	24	8	23	121	10	20	6	16	M8	16	14	56.5	4	5	37	158
80	40	45	19	86	44	94	G3/8“	30	M20x1.5	30	9	31	128	10	25	10	16	M10	21	17	72	4	5	46	174
100	40	55	19	106	54	115	G1/2“	36	M20x1.5	30	9	34	138	10	25	11	18	M10	21	17	89	4	17	51	189

Mounting accessories

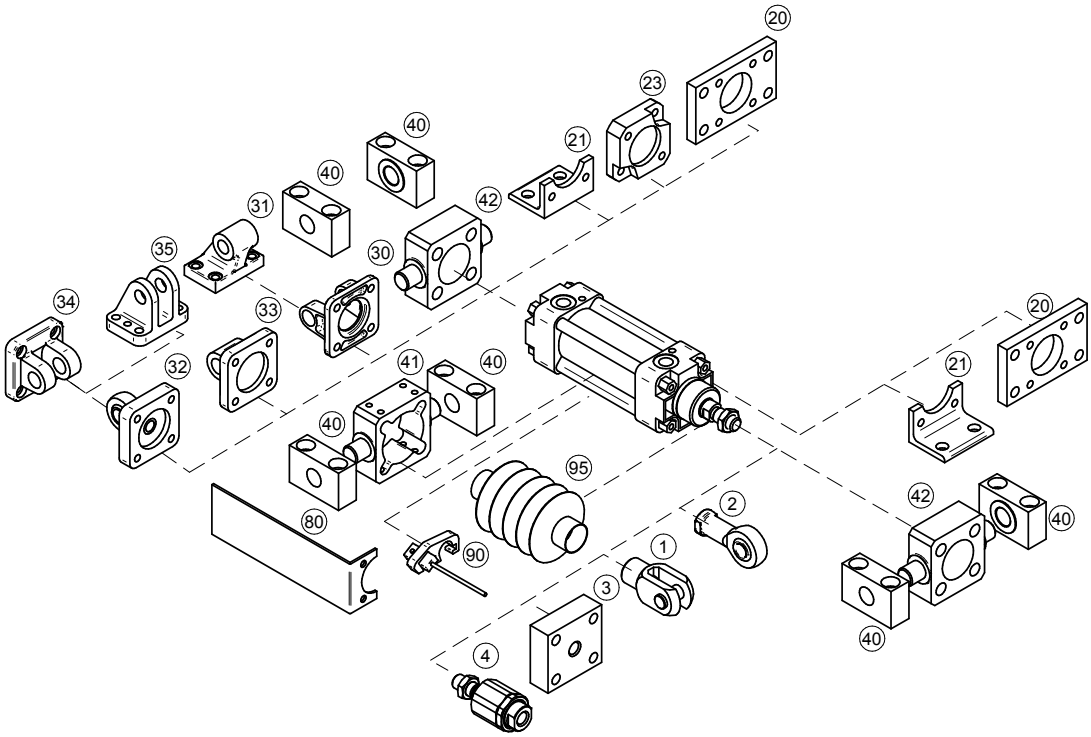

Mounting accessories	... see page
1 Piston rod clevis	... 4-2
2 Piston rod eye	... 4-3
3 Flanged piston rod coupling	... 4-2
4 Self-aligning piston rod coupling	... 4-3
20 Flange mounting	... 4-5
21 Foot mounting	... 4-5
23 Boxer flange mounting	... 4-6
30 Swivel flange	... 4-7
31 Clevis foot mounting	... 4-7
32 Swivel flange with spherical bearing	... 4-8
33 Swivel flange	... 4-8
34 Narrow swivel flange	... 4-9
35 Rectangular swivel flange	... 4-9
40 Trunnion mounting	... 4-10
41 Pivot pin	... 4-11
42 Pivot pin to front/end cap	... 4-12
80 Valve bracket	... 4-12
90 Prox. switch	... 3-2, 3-4, 3-7
95 Piston rod protective cover	... 4-4

SINGLE ACTING PNEUMATIC CYLINDERS ISO 21287 COMPACT

STRÁNSKÝ A PETRŽÍK

Compact cylinders are smaller than standard cylinders and they are suitable especially, when there isn't enough space for standard cylinder. Dimensions of mounting holes meets international standards ISO 21287, ISO 6431, VDMA 24562 and NF E 49003.1, that is why standard mounting accessories can be used. Cylinders aren't equipped with cushioning.

Working pressure	0,6 MPa
Min. pressure	0,15 MPa
Max. pressure	1,0 MPa
Temp. range	-20°C to +80°C
Working medium	modified compressed air

Piston diameter [mm]	25	32	40	50	63	80	100
Thrust at 0.6 MPa [N]*	275	482	754	1178	1870	3015	4713
Return force at 0.6 MPa [N]*	228	415	662	1025	1717	2720	4487
Spring restoring force [N]	10	17	24	22	42	33	120
Connection	M5	G1/8“	G1/8“	G1/8“	G1/8“	G1/8“	G1/8“
Max. stroke [mm]	15	25	25	40	50	50	50
Weight 0 mm stroke [kg]	0,21	0.25	0.34	0.51	0.75	1.23	1.99
Weight add. per 1 mm stroke [kg]	0,0027	0.0030	0.0034	0.0047	0.0055	0.0076	0.0095

*) Cylinder will make out either thrust or return force, accordingly to the type (spring return / extend).

Order codes

12105 10 00 050 0010

Type	
12105	compact single acting, spring return
12106	compact single acting, spring extend

Equipment	
00	w/o magnet, external thread
01	w/o magnet, internal thread
10	with magnet, external thread
11	with magnet, internal thread

Options	
00	without options
14	1.4301 stainless steel piston rod
16	steel parts from stainless 1.4301 piston rod stainless 1.4401

For more options regarding materials or dimensions, please contact our technical dept.

Piston diameter	
032	32 mm
040	40 mm
050	50 mm
063	63 mm
080	80 mm
100	100 mm

Stroke / Repair kit	
xxxx	mm of stroke e.g.: 0010 = stroke 10 mm
9999	repair kit

Construction / materials

- caps: drawn dural profile, anodized
- body: drawn dural profile, anodized
- piston rod: grounded round steel bar CK45 with hard chrome plated surface

Dimensions

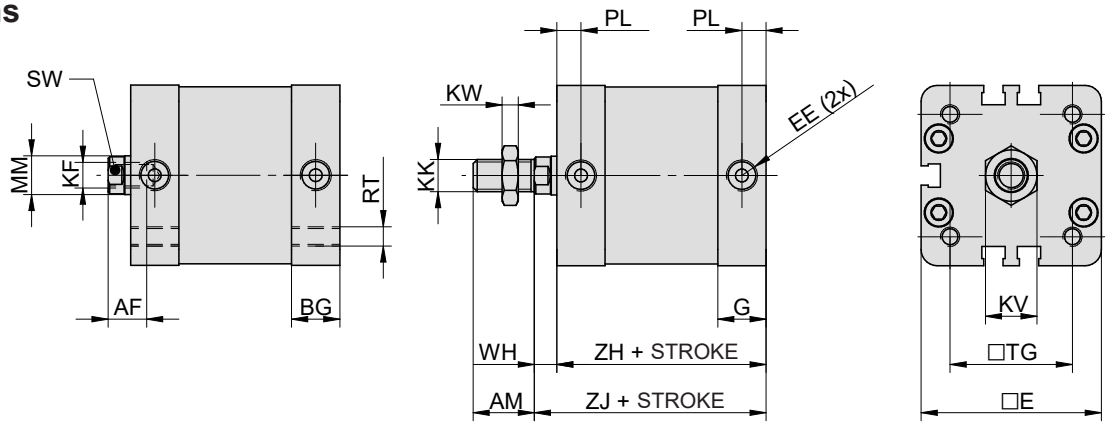

∅	AF	AM	BG	E	EE	G	KF	KK	KV	KW	MM	PL	RT	SW	TG	WH	ZH	ZJ
25	10	16	15	41	M5	12	M6	M8	13	4	10	6	M5	8	26	6	39	45
32	12	19	14.5	49.2	G1/8“	14,5	M8	M10x1.25	16	5	12	7.5	M6	10	32.5	7	52*	59*
40	12	19	15	56	G1/8“	15	M8	M10x1.25	16	5	12	7.5	M6	10	38	7	45	52
50	16	22	15	69	G1/8“	15	M10	M12x1.25	18	6	16	7.5	M8	13	46.5	8	45	53
63	16	22	15	79	G1/8“	15	M10	M12x1.25	18	6	16	7.5	M8	13	56.5	8	49	57
80	20	28	17	95	G1/8“	17	M12	M16x1.5	24	8	20	7.5	M10	16	72	10	54	64
100	20	28	20	115.5	G1/8“	20	M12	M16x1.5	24	8	20	7.5	M10	16	89	10	67	77

*) Dimensions ZH and ZJ of dia. 32 mm do not follow ISO 21287 standard.

Mounting accessories

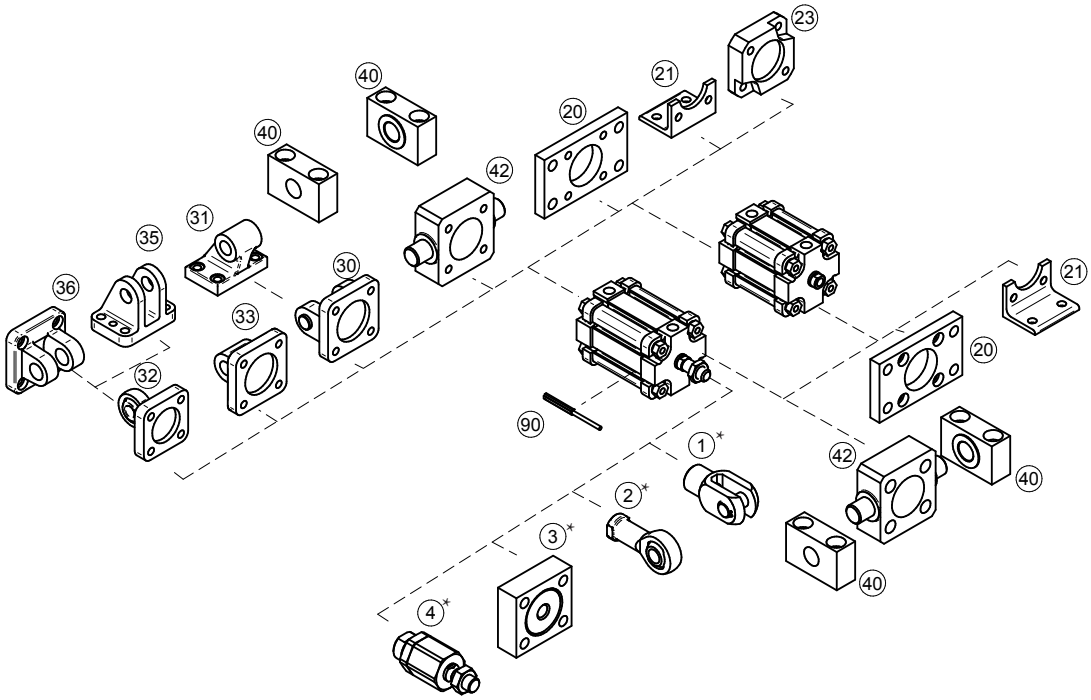

Mounting accessories	... see page
1 Piston rod clevis*	... 4-2
2 Piston rod eye*	... 4-3
3 Flanged piston rod coupling*	... 4-2
4 Self-aligning piston rod coupling*	... 4-3
20 Flange mounting	... 4-5
21 Foot mounting	... 4-5
23 Boxer flange mounting	... 4-6
30 Swivel flange	... 4-7
31 Clevis foot mounting	... 4-7
32 Swivel flange with spherical bearing	... 4-8
33 Swivel flange	... 4-8
34 Narrow swivel flange	... 4-9
35 Rectangular swivel flange	... 4-9
40 Trunnion mounting	... 4-10
42 Pivot pin to front/end cap	... 4-12
90 Prox. switch	... 3-2, 3-4
90 Proportional position sensor with analog output	... 3-6

*) Please check dimensions of thread on cylinder and accessories for piston rod, before you order it (for example: compact cylinder piston dia. 40 mm has thread M10x1.25 on piston rod, piston rod clevis for cylinder dia. 40 has thread M12x1.25, so it is necessary to order picton rod clevis for cylinder dia. 25/32, where is thread M10x1.25).

SINGLE ACTING PNEUMATIC CYLINDERS DIN ISO 6432

STRÁNSKÝ A PETRŽÍK

Cylinders are designed to meet the specifications of international standard ISO 6432. Cylinders aren't equipped with cushioning.

Working pressure	0,6 MPa
Min. pressure	0,15 MPa
Max. pressure	1,0 MPa
Temp. range	-20°C to +80°C
Working medium	modified compressed air

Piston diameter [mm]	12	16	20	25
Thrust at 0.6 MPa [N]*	66	121	188	295
Return force at 0.6 MPa [N]*	50	102	158	248
Spring restoring force [N]	11	11	13	13
Connection	M5	M5	G1/8“	G1/8“
Max. stroke [mm]	50	50	50	50
Weight 0 mm stroke [kg]	0.04	0.05	0.15	0.18
Weight add. per 1 mm stroke [kg]	0.0005	0.0005	0.0010	0.0013

*) Cylinder will make out either thrust or return force, accordingly to the type (spring return / extend).

Order codes

11005 10 00 020 0010

Type	
11005	to DIN ISO 6432, single acting, spring return
11006	to DIN ISO 6432, single acting, spring extend

Equipment	
00	w/o magnet
10	with magnet

Options	
00	without options
14	1.4301 stainless steel piston rod
16	steel parts from stainless 1.4301 piston rod stainless 1.4401

For more options regarding materials or dimensions, please contact our technical dept.

Piston diameter	
012	12 mm
016	16 mm
020	20 mm
025	25 mm

Stroke / Repair kit	
xxxx	mm of stroke e.g.: 0010 = stroke 10 mm
9999	repair kit

Construction / materials

- caps: anodized dural
- body: drawn dural tube, anodized
- piston rod: grounded round steel bar CK45 with hard chrome plated surface

Dimensions

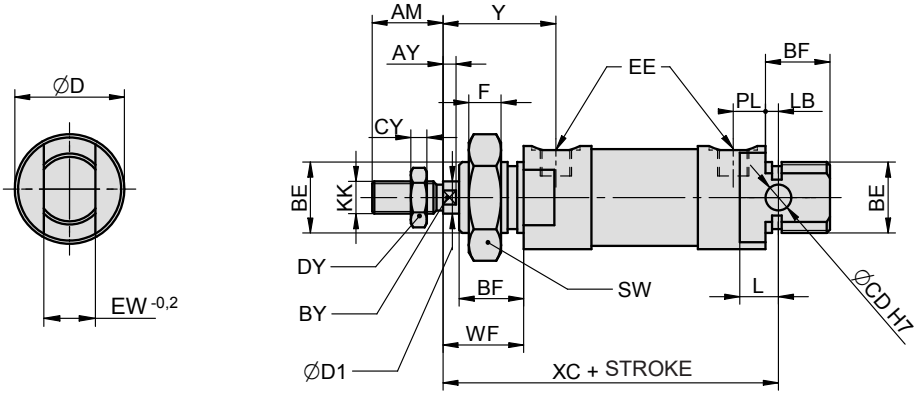

Ø	AM	AY	BE	BF	BY	CD	CY	D	D1	DY	EE	EW	F	KK	L	LB	PL	SW	WF	XC	Y
12	16	3	M16x1.5	15	5	6	3	22	6	10	M5	12	8	M6	10	4	5	24	20	75	25
12*	16	3	M16x1.5	15	5	6	3	22	6	10	M5	12	8	M6	10	4	5	24	20	80	25
12M	16	3	M16x1.5	15	5	6	3	22	6	10	M5	12	8	M6	10	4	5	24	20	80	25
12M*	16	3	M16x1.5	15	5	6	3	22	6	10	M5	12	8	M6	10	4	5	24	20	85	25
16	16	3	M16x1.5	15	5	6	3	25	6	10	M5	12	8	M6	11	5	5	24	20	82	25
16M	16	3	M16x1.5	15	5	6	3	25	6	10	M5	12	8	M6	11	5	5	24	20	87	25
20	20	4	M22x1.5	20	7	8	6	27.5	8	13	G1/8“	16	10	M8	12	3	9.5	34	24.5	95	34
25	22	4	M22x1.5	20	9	8	6	32	10	17	G1/8“	16	10	M10x1.25	12	4	10	34	25.5	104	35

Notice: M after piston diameter size means cylinder with magnetic piston.
Notice *) Values are valid for type 11006 with spring extedned piston rod

Mounting accessories

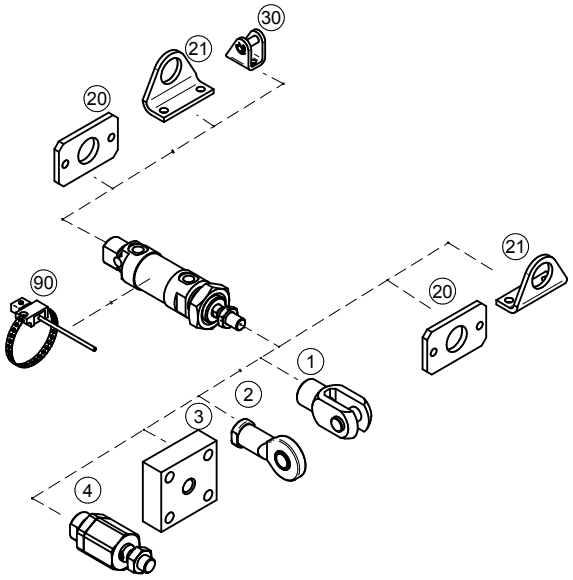

Mounting accessories		... see page
1	Piston rod clevis	... 4-2
2	Piston rod eye	... 4-3
3	Flanged piston rod coupling	... 4-2
4	Self-aligning piston rod coupling	... 4-3
20	Flange mounting	... 4-20
21	Foot mounting	... 4-20
30	Swivel flange	... 4-20
90	Prox. switch	... 3-2, 3-4

SINGLE ACTING PNEUMATIC CYLINDERS SHORT STROKE

STRÁNSKÝ A PETRŽÍK

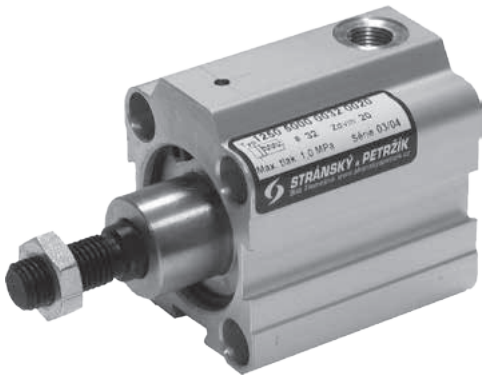

Pneumatic cylinder may be used, when small mounting dimensions are required. There is no cushioning at end of stroke.

Working pressure	0,6 MPa
Min. pressure	0,15 MPa
Max. pressure	1,0 MPa
Temp. range	-20°C to +80°C
Working medium	modified compressed air

Piston diameter [mm]	20	25	32	40	50	63	80	100	160
Thrust at 0.6 MPa [N]*	188	295	482	754	1178	1870	3015	4713	12064
Return force at 0.6 MPa [N]*	158	248	415	662	1025	1717	2720	4484	11309
Spring restoring force [N]	15	16	24	27	46	46	124	124	402
Connection	M5	G1/8“	G1/8“	G1/8“	G1/8“	G1/8“	G1/4“	G1/4“	G3/8“
Max. stroke [mm]	25	25	25	25	25	25	25	25	50
Weight 0 mm stroke [kg]	0.05	0.08	0.16	0.29	0.43	0.60	1.10	1.80	8.20
Weight add. per 1 mm stroke [kg]	0.0014	0.0015	0.0040	0.0060	0.0080	0.0100	0.0160	0.0200	0.0600

*) Cylinder will make out either thrust or return force, accordingly to the type (spring return / extend).

Order codes

12505 10 00 050 0010

Type	
12505	short stroke, single acting, spring return
12506	short stroke, single acting, spring extend

Equipment	
00	w/o magnet, external thread
01	w/o magnet, internal thread
10	with magnet, external thread
11	with magnet, internal thread

Options	
00	without options
10	Viton® piston rod sealing
14	1.4301 stainless steel piston rod

For more options regarding materials or dimensions, please contact our technical dept.

Piston diameter	
020	20 mm
025	25 mm
032	32 mm
040	40 mm
050	50 mm
063	63 mm
080	80 mm
100	100 mm
160	160 mm

Stroke / Repair kit	
xxxx	mm of stroke e.g.: 0010 = stroke 10 mm
9999	repair kit

Construction / materials

- caps: anodized dural
- body: drawn anodized dural profile, piston diameter 160: aluminium casting
- piston rod: grounded round steel bar CK45 with hard chrome plated surface

Dimensions

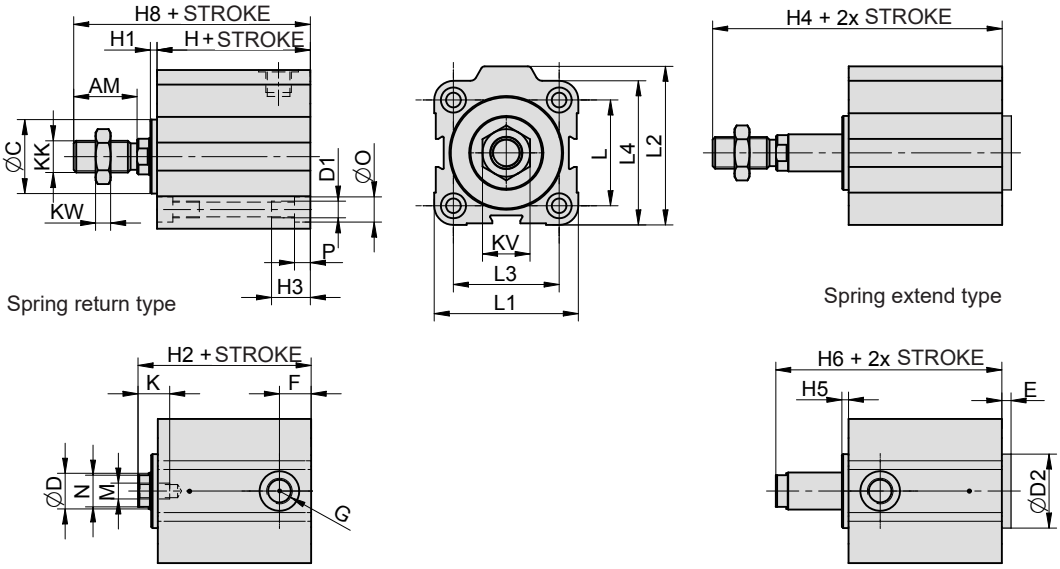

∅	AM	C	D	D1	D2	E	F	G	H	H1	H2	H3	H4	H5	H6	H8	K	KK	KV	KW	L	L1	L2	L3	L4	M	N	O	P
20	20	12	8	M5	12	16	9	M5	23.5	16	44.5	15	51	2.5	31	64.5	8	M8	13	6	22	32	35	22	32	M5	7	7	5
20M	20	12	8	M5	12	16	9	M5	41.5	16	62.5	15	69	2.5	49	82.5	8	M8	13	6	22	32	35	22	32	M5	7	7	5
25	22	17	10	M5	17	12	10	G1/8“	26.5	11	42.5	15	56	2.5	34	64.5	8	M10x1.25	17	6	28	38	45	26	39	M5	8	8	5
25M	22	17	10	M5	17	12	10	G1/8“	34.5	11	50.5	15	64	2.5	42	72.5	8	M10x1.25	17	6	28	38	45	26	39	M5	8	8	5
32	22	21	12	M6	21	12.5	11	G1/8“	35	12.5	52.5	18	64.5	2.5	42.5	74.5	12	M10x1.25	17	6	36	45	54	32	48	M6	10	9.5	6
32M	22	21	12	M6	21	12.5	11	G1/8“	45.5	15.5	63	18	75	2.5	53	85	12	M10x1.25	17	6	36	45	54	32	48	M6	10	9.5	6
40	24	28	14	M6	28	11	12	G1/8“	44	10.5	59.5	18	75.5	2.5	51.5	83.5	12	M12x1.25	19	10	40	55	60	40	55	M6	12	9.5	6
50	32	36	18	M8	36	12	13	G1/8“	46	12	64	24	86.5	2.5	54.5	96	14	M16x1.5	24	8	50	65	73	50	65	M8	16	11	8
63	32	48	18	M10	48	7	14.5	G1/8“	46	7	59	24.5	87.5	3.5	55.5	91	14	M16x1.5	24	8	62	80	88	62	80	M8	16	14	8.5
63M	32	48	18	M10	48	7	14.5	G1/8“	50	7	63	24.5	91.5	3.5	59.5	95	14	M16x1.5	24	8	62	80	88	62	80	M8	16	14	8.5
80	43	54	22	M10	54	8.5	16.5	G1/4“	50	8.5	64.5	24.5	102.5	3.5	59.5	107.5	17	M20x1.5	30	9	82	100	110	82	100	M10	19	14	8.5
80M	43	54	22	M10	54	8.5	16.5	G1/4“	57	8.5	71.5	24.5	109.5	3.5	66.5	114.5	17	M20x1.5	30	9	82	100	110	82	100	M10	19	14	8.5
100	43	60	22	M12	60	7	20	G1/4“	57	7	70	29	112	6	69	113	20	M20x1.5	30	9	103	124	134	103	124	M12	19	17	11
100M	43	60	22	M12	60	7	20	G1/4“	61	7	74	29	116	6	73	117	20	M20x1.5	30	9	103	124	134	103	124	M12	19	17	11
160	72	110	40	M20	–	–	22.5	G3/8“	96	–	113	45	–	–	–	185	25	M36x2	50	18	154	200	210	154	200	M16	36	26	21

Notice: M after piston diameter size means cylinder with magnetic piston.

Mounting accessories

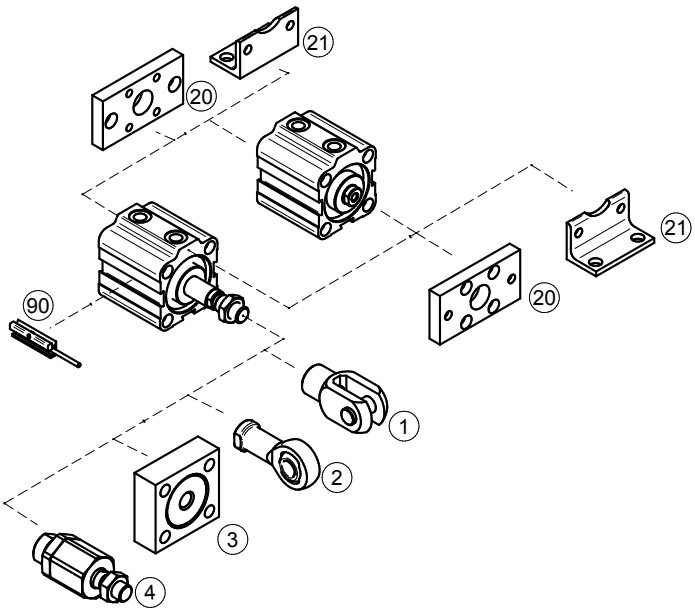

Mounting accessories		... see page
1	Piston rod clevis	... 4-2
2	Piston rod eye	... 4-3
3	Flanged piston rod coupling	... 4-2
4	Self-aligning piston rod coupling	... 4-3
20	Flange mounting	... 4-29
21	Foot mounting	... 4-29
90	Prox. switch	... 3-2, 3-4

SINGLE ACTING PNEUMATIC CYLINDERS SERIES MCMJP

STRÁNSKÝ A PETRŽÍK

1

The pneumatic cylinder can be used wherever short installation dimensions are required. The cylinders do not have end position damping. They are available with piston diameters of 6, 10 or 15 mm. The installation space can be significantly reduced, as these cylinders can be recessed directly into the device body (plug mounting) or fixed with two nuts (panel mounting). The cylinders do not have a magnet for position sensing.

Working pressure	0,5 MPa
Min. pressure	0,2 MPa
Max. pressure	0,7 MPa
Temp. range	-5°C to +60°C
Working medium	modified compressed air

Piston diameter [mm]	6	10	15
Thrust at 0,5 MPa [N]*	10	33	77
Spring restoring force [N]	1,4	2,4	4,4
Connection*	M5	M5	M5
Work speed [mm/s]	50-500		
Standard strokes [mm]	5, 10, 15		
Max. allowable kinetic energy [J]	0,003	0,008	0,019
Weight 0 mm stroke [kg]	0,008	0,023	0,063
Weight add. per 1 mm stroke [kg]	0,0004	0,0010	0,0020

*) Cylinders have a threaded connection or are recessed in the body with an internal inlet.

Order codes

P MCMJP B - 15 - 6 - 15

	Mounting style
B	panel mounting 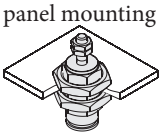
S	plug mounting 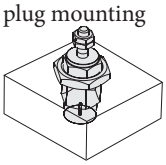

	Cylinder type
10	single acting, spring return, without thread on piston rod
15	single acting, spring return, with thread on piston rod

	Piston diameter
6	6 mm
10	10 mm
15	15 mm

	Stroke
5	5 mm
10	10 mm
15	15 mm

For type S - plug ounting in the hole, the sealing O-ring is included in the delivery.

Construction / materials

- body, cap: copper
- piston rod: stainless steel
- nut on body: copper, steel for ø15
- nut on piston rod: steel
- sealing: NBR
- spring: SWP

Dimensions

Type B - panel mounting

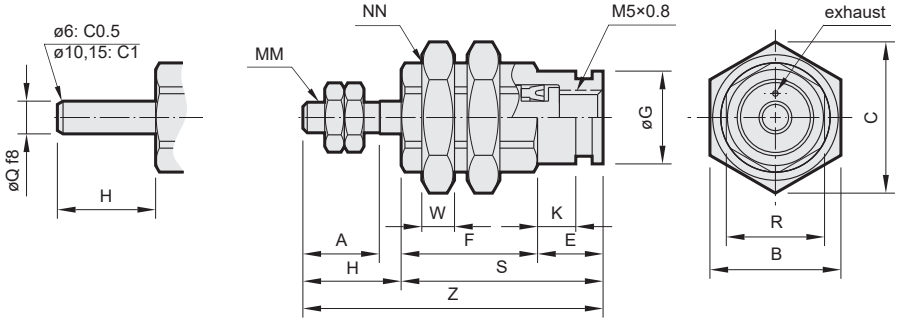

Type S - plug mounting

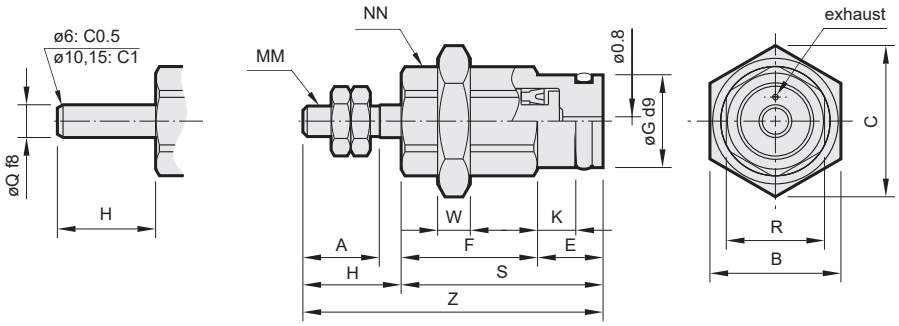

∅	A	B	C	E	F for stroke			G	H	K	MM	NN	Q	R	S for stroke			W	Z for stroke		
					5	10	15								5	10	15		5	10	15
6	7	12	13,9	6	12,5	19,5	26,5	8,5	9	3,5	M3	M10x1	3	9	18,5	25,5	32,5	3	27,5	34,5	41,5
10	10	19	22	6	14,5	21	28	12	12	3,5	M4	M15x1,5	5	13	20,5	27	34	4	32,5	39	46
15	12	27	31	7	16,5	22,5	29	19	14	4,2	M5	M22x1,5	6	20	23,5	29,5	36	5	37,5	43,5	50

Type S - hole dimensions

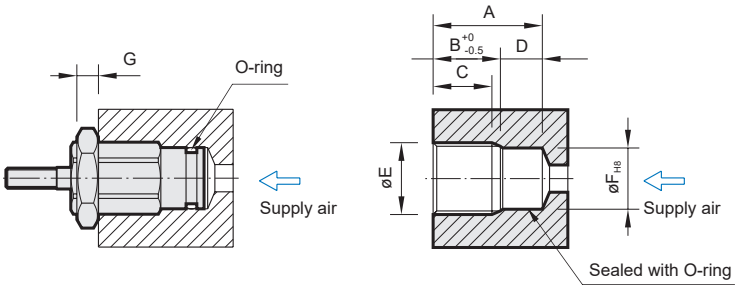

∅	Stroke	A	B	C	D	E	F	G
6	**5**	16	12,5	10	3,5	M10x1	8,5	3
	10	23	19,5	17				
	15	30	26,5	24				
10	**5**	17	13,5	10,5	3,5	M15x1,5	12	4
	10	23,5	20	17				
	15	30,5	27	24				
15	**5**	19	14,5	11,5	4,5	M22x1,5	19	5
	10	25	20,5	17,5				
	15	31,5	27	24				

SINGLE ACTING PNEUMATIC SWING ACTUATORS SERIES ATM

STRÁNSKÝ A PETRŽÍK

The single-acting swing actuators of the ATM series are mainly intended for controlling armatures and valves, where it is necessary to ensure a return to the initial state when the supply of compressed air is interrupted. The swing movement is ensured by a pair of toothed racks with pistons. The torque is not constant throughout the range of swinging motion. Supplying compressed air rotates the output shaft of the drive, venting the springs returns the shaft to its initial state.

Working pressure	0,6 MPa
Min. pressure	0,2 MPa
Max. pressure	0,8 MPa
Temp. range	-20°C to +80°C *
End position regulation	±4°
Working medium	modified compressed air

*) values for temp. range B

Průměr pístu [mm]	52	63	75	83	92	105	125	140	160	190	210	240	270	300	350	400
Connection	G1/4“	G1/4“	G1/4“	G1/4“	G1/4“	G1/4“	G1/4“	G1/4“	G1/4“	G1/4“	G1/4“	G1/4“	G1/2“	G1/2“	G1/2“	G1/2“
Air source interface	NAMUR VDI/VDE 3845															
Flange connection pattern 1	F03	F05	F05	F05	F05	F07	F07	F10	F10	–	–	–	–	–	F16	F16
Flange connection pattern 2	F05	F07	F07	F07	F07	F10	F10	F12	F12	F14	F14	F16	F16	F16	F25	F25
Armature connection	ISO 5211															
Position sensing	optical with the option of connecting a sensor, positioner or sensor box															
Connection of position sys.	NAMUR VDI/VDE 3845															
Opening time [s] at 0,8 MPa	0,4	0,5	0,5	0,6	0,7	0,9	1,3	1,6	2	3	4	4,5	5			
Closing time [s] at 0,8 MPa	0,4	0,5	0,6	0,6	0,8	0,9	1,4	1,8	2,3	3,3	4,4	4,9	5,7			
Weight [kg]	1,48	2,23	3,15	3,63	5,2	7,8	11,6	15,6	24,1	36	55	80,9	117			
One spring weight [kg]	0,01	0,02	0,03	0,05	0,06	0,10	0,16	0,23	0,39	0,45	0,80	1,33	2,00			

Order codes

ZG-ATM 125 X 90 B AM D8

	Piston diameter
052	52 mm
063	63 mm
075	75 mm
083	83 mm
092	92 mm
105	105 mm
125	125 mm
140	140 mm

	Piston diameter
160	160 mm
190	190 mm
210	210 mm
240	240 mm
270	270 mm
300	300 mm
350	350 mm
400	400 mm

	Swing angle
90	angle 90°
120	angle 120°
135	angle 135°
180	angle 180°

	Temperature range
B	-20°C to +80°C
D	-40°C to +80°C
G	-15°C to +150°C

	Number of springs
5*	2+3 springs
6*	3+3 springs
7	3+4 springs
8	4+4 springs
9	4+5 springs
10	5+5 springs
11	5+6 springs
12	6+6 springs
13*	6+7 springs
14*	7+7 springs
15*	7+8 springs
16*	8+8 springs

*) Note for the number of springs
5 and 6 does not apply to piston ∅ 400 mm
13 to 16 only apply to piston ∅ 400 mm

Limit switches can be found on page 3-10

The swing direction is standard to the right (clockwise). If you require the opposite swing direction, please contact our technical department.

Construction / materials

- body: hard anodized extruded aluminum alloy, honed bore
- pistons: Aluminum casting or steel casting
- pinion and cam: steel
- caps: Aluminium casting
- seal: NBR, or FPM or silicone
- fasteners: stainless steel
- position indicator: plastic
- springs: spring steel

Notice

The torque caused by the drive must not be greater than the maximum permissible torque specified in ISO 5211 for the specific size of the mounting flange.

Actuator sizing

The recommended safety factor for single-acting swing actuator is 30 to 50% under normal conditions. Example of determining the size of actuator: The required torque of the fitting is 80 Nm, the torque increased by the safety factor is 80 + 30% of 80 = 104 Nm. At an inlet pressure of 0.5 MPa, it is therefore advisable to choose the ZG-ATM140 D7 actuator with 7 springs. During air movement, actuator has a torque of 308 Nm in the 0° position, and 247 Nm in the 90° position. When returned by springs, actuator has a torque of 181 Nm in the 90° position and 120 Nm in the 0° position.

Technical data

Torque [Nm] depending on working pressure

Piston ∅ [mm]	Number of springs	Inlet pressure [MPa] and position														Return by springs	
		0,25		0,3		0,4		0,5		0,6		0,7		0,8			
		0°	90°	0°	90°	0°	90°	0°	90°	0°	90°	0°	90°	0°	90°	90°	0°
52	5	5,7	3,6	7,6	5,7											6,2	4,3
	6	4,8	2,5	6,9	4,5	10,9	8,5									7,4	5,0
	7	3,9	1,3	6,1	3,3	9,8	7,3	14,0	10,4							8,6	5,9
	8			5,2	2,0	9,2	6,0	13,2	9,1	17,2	14,1					9,9	6,7
	9			4,3	0,8	8,3	4,8	12,3	7,9	16,3	12,8	20,3	16,8			11,1	7,6
	10					7,4	3,6	11,5	6,7	15,5	11,6	19,5	15,6			12,4	8,5
	11					6,6	2,3	10,6	5,4	14,6	10,4	18,6	14,3	22,6	18,3	13,6	9,3
	12							9,7	4,2	13,8	9,1	17,8	12,2	21,8	17,1	14,8	10,2
63	5	11,4	7,7	15,0	11,4	22,3	14,9									10,4	6,8
	6	10,1	5,7	13,6	9,3	20,9	16,6	28,3	23,9							12,5	8,2
	7	8,6	3,6	12,5	7,2	19,3	14,5	26,8	21,9							14,6	9,6
	8			10,9	5,1	18,2	12,4	25,5	19,8	32,8	27,0	40,1	34,3			16,7	10,9
	9					16,8	10,4	24,1	17,7	31,4	24,9	38,7	32,2			18,8	12,3
	10					14,0	8,2	22,8	15,6	30,0	22,8	37,3	30,1	44,7	37,4	20,9	13,7
	11							21,5	13,5	28,7	30,7	36,0	28,0	44,3	35,3	22,9	15,0
	12							20,0	11,4	27,3	18,6	34,6	25,9	41,9	33,3	25,0	16,4
75	5	14,5	10,6	19,4	15,5	29,5	25,7									14,5	10,5
	6	12,4	7,6	17,3	12,6	27,4	22,7	37,5	32,8							17,4	12,7
	7	10,4	4,8	15,2	9,7	25,3	20,0	35,4	30,0							20,3	14,8
	8			13,1	6,8	23,1	17,0	33,3	27,0	43,2	37,0	53,3	47,0			23,2	16,9
	9					21,0	14,1	31,2	24,1	41,1	34,1	51,2	44,2			26,0	19,0
	10					19,0	11,1	28,9	21,2	39,0	31,2	49,0	41,2	59,0	51,0	29,0	21,0
	11							27,0	18,3	37,0	28,3	47,0	38,4	57,0	48,5	32,0	23,2
	12							25,0	15,4	34,9	25,4	45,0	35,4	55,0	45,4	34,8	25,3
83	5	23,3	16,0	31,0	24,0	46,8	39,7									23,0	15,8
	6	20,0	11,5	28,0	19,3	43,7	35,0	59,5	51,0							27,6	19,0
	7	17,0	7,0	25,0	15,0	40,5	30,5	56,2	46,2							32,2	22,0
	8			22,0	10,0	37,5	25,8	53,0	41,5	69,0	57,2	84,5	73,0			36,8	25,3
	9					34,2	2,3	50,0	37,0	66,0	52,6	81,2	68,3			41,4	28,5
	10					31,0	16,6	46,7	32,3	62,5	48,0	78,0	63,7	93,8	79,3	46,0	31.6
	11							43,6	27,7	59,3	43,4	75,0	59,0	91,0	74,8	50,6	34,8
	12							40,5	23,2	56,0	39,0	72,0	54,5	87,4	70,2	55,2	38,0
92	5	33,0	22,0	44,2	33,2	66,8	55,9									34,4	23,3
	6	28,4	15,2	39,6	26,4	62,2	49,0	84,8	71,6							41,2	28,0
	7	23,8	8,2	34,9	19,4	57,5	42,1	80,2	64,7							48,0	32,7
	8			31,3	12,6	52,9	35,2	75,5	57,9	98,0	80,5	120,7	103,0			55,0	37,3
	9					48,2	28,4	71,0	51,0	93,5	73,6	116,0	96,0			61,9	42,0
	10					43,6	21,5	66,2	44,0	89,0	66,7	111,3	89,2	134,0	112,0	68,7	46,7
	11							61,5	37,2	84,0	60,0	106,6	82,4	129,2	105,0	75,6	51,4
	12							56,8	30,4	79,5	53,0	101,9	75,5	124,5	98,0	82,5	56,0

Torque [Nm] depending on working pressure (continued)

Piston ∅ [mm]	Number of springs	Inlet pressure [MPa] and position														Return by springs	
		0,25		0,3		0,4		0,5		0,6		0,7		0,8			
		0°	90°	0°	90°	0°	90°	0°	90°	0°	90°	0°	90°	0°	90°	90°	0°
105	5	51,0	33,4	67,5	50,0	100,6	83,0									49,2	31,6
	6	45,0	23,5	61,0	40,0	94,2	73,2	127,3	106,2							59,0	38,0
	7	38,4	13,7	55,0	30,0	88,0	63,4	121,0	96,4							69,0	44,3
	8			48,5	20,5	81,6	53,5	115,0	86,5	147,7	119,6	180,8	152,7			78,7	50,6
	9					75,3	43,7	109,0	76,8	141,5	110,0	174,5	142,9			88,6	56,9
	10					69,0	33,4	102,0	66,5	135,0	100,0	168,2	132,6	201,0	165,7	98,4	63,3
	11							96,0	57,0	128,7	90,0	161,8	123,0	195,0	156,0	108,3	69,3
	12							89,5	47,5	122,5	90,6	155,5	113,6	189,0	146,7	118,0	76,0
125	5	73,0	47,0	98,0	72,0	148,0	122,0									79,0	52,0
	6	63,0	31,0	88,0	56,0	138,0	107,0	188,0	157,0							94,0	63,0
	7	52,0	15,0	77,0	40,0	127,0	90,0	178,0	141,0							110,0	73,0
	8			67,0	25,0	117,0	75,0	167,0	125,0	217,0	176,0	268,0	226,0			125,0	84,0
	9					107,0	59,0	157,0	109,0	207,0	159,0	257,0	210,0			141,0	94,0
	10					96,0	44,0	146,0	94,0	196,0	144,0	247,0	194,0	297,0	245,0	157,0	105,0
	11							136,0	78,0	186,0	128,0	236,0	178,0	286,0	228,0	173,0	115,0
	12							125,0	63,0	176,0	113,0	226,0	163,0	276,0	213,0	188,0	125,0
140	5	128,0	85,0	171,0	127,0	256,0	213,0									129,0	86,0
	6	111,0	59,0	154,0	102,0	239,0	187,0	325,0	273,0							155,0	103,0
	7	94,0	33,0	137,0	76,0	222,0	162,0	308,0	247,0							181,0	120,0
	8			120,0	50,0	205,0	136,0	291,0	221,0	376,0	307,0	462,0	392,0			206,0	137,0
	9					187,0	110,0	273,0	196,0	358,0	281,0	444,0	367,0			232,0	155,0
	10					170,0	84,0	256,0	169,0	341,0	255,0	427,0	340,0	512,0	426,0	258,0	172,0
	11							238,0	143,0	324,0	229,0	409,0	314,0	495,0	400,0	284,0	189,0
	12							221,0	118,0	307,0	203,0	392,0	289,0	478,0	374,0	310,0	206,0
160	5	193,0	124,0	259,0	191,0	392,0	324,0									208,0	140,0
	6	165,0	83,0	232,0	149,0	365,0	282,0	498,0	415,0							250,0	168,0
	7	137,0	41,0	203,0	107,0	336,0	240,0	469,0	373,0							292,0	196,0
	8			176,0	66,0	309,0	199,0	442,0	337,0	575,0	465,0	708,0	598,0			333,0	223,0
	9					280,0	157,0	413,0	290,0	546,0	423,0	679,0	556,0			375,0	251,0
	10					253,0	115,0	386,0	248,0	519,0	381,0	652,0	514,0	785,0	647,0	417,0	279,0
	11							358,0	207,0	491,0	340,0	624,0	473,0	757,0	606,0	458,0	307,0
	12							330,0	165,0	463,0	298,0	596,0	431,0	729,0	564,0	500,0	335,0
190	5	332	222	438	329	651	542									309	200
	6	292	161	398	267	611	480	824	693							371	240
	7	252	99	358	205	571	418	784	631							433	280
	8			318	143	531	356	744	569	957	782	1169	995			495	320
	9					491	295	704	507	917	720	1130	933			557	360
	10					451	233	664	446	877	658	1090	871	1302	1084	618	400
	11							624	384	837	597	1050	809	1263	1022	680	440
	12							584	322	797	535	1010	748	1223	960	742	480

Torque [Nm] depending on working pressure (continued)

Piston ∅ [mm]	Number of springs	Inlet pressure [MPa] and position														Return by springs	
		0,25		0,3		0,4		0,5		0,6		0,7		0,8			
		0°	90°	0°	90°	0°	90°	0°	90°	0°	90°	0°	90°	0°	90°	90°	0°
210	5	390	285	523	418	789	684									380	275
	6	335	209	468	342	734	608	1000	874							456	330
	7	280	133	413	266	679	532	945	798							532	385
	8			358	190	624	456	890	722	1156	988	1422	1254			608	440
	9					569	380	835	646	1101	912	1367	1178			684	495
	10					514	304	780	570	1046	836	1312	1102	1578	1368	760	550
	11							725	494	991	760	1257	1026	1523	1292	836	605
	12							670	418	936	684	1202	950	1468	1216	912	660
240	5	552	409	744	600	1129	985									554	410
	6	470	297	662	489	1047	874	1432	1259							665	492
	7	388	187	580	379	964	764	1349	1149							775	575
	8			498	268	883	653	1267	1037	1652	1422	2037	1807			886	656
	9					800	542	1185	926	1569	1311	1954	1696			998	739
	10					718	431	1103	816	1488	1201	1872	1586	2257	1970	1108	821
	11							1021	705	1406	1090	1791	1474	2176	1859	1219	903
	12							939	594	1323	979	1708	1363	2093	1748	1330	985
270	5	890	675	1195	968	1779	1552									787	560
	6	790	519	1083	811	1667	1396	2252	1981							943	672
	7	679	361	972	654	1556	1238	2141	1823							1101	783
	8			860	497	1444	1081	2029	1666	2614	2252	3199	2836			1258	895
	9					1332	923	1917	1509	2502	2094	3087	2678			1416	1007
	10					1220	767	1805	1352	2390	1937	2974	2521	3560	3107	1572	1119
	11							1693	1194	2278	1779	2862	2364	3448	2949	1730	1231
	12							1582	1037	2167	1623	2751	2207	3336	2792	1887	1342
300	5	1097	729													1061	730
	6	935	494	1316	875											1273	876
	7	772	258	1153	639	1916	1402									1485	1022
	8			991	403	1754	1166	2517	1929							1697	1168
	9					1592	930	2355	1693	3119	2456					1909	1314
	10					1430	695	2193	1458	2956	2221	3719	2984	4482	3747	2122	1460
	11							2030	1222	2793	1985	3556	2748	4319	3511	2334	1606
	12							1868	986	2631	1749	3394	2512	4157	3275	2546	1752
350	5	1533	964													1702	1173
	6	1292	586	1863	1157											2043	1408
	7	1031	208	1602	779	2745	1922									2383	1642
	8			1341	401	2484	1544	3626	2686							2724	1877
	9					2224	1165	3336	2307	4508	3449					3064	2112
	10					1963	787	3105	1929	4247	3071	5390	4214	6532	5356	3405	2346
	11							2844	1551	3986	2693	5129	3836	6271	4978	3745	2581
	12							2584	1172	3726	2314	4869	3457	6011	4599	4086	2816

1

Torque [Nm] depending on working pressure (continued)

Piston ∅ [mm]	Number of springs	Inlet pressure [MPa] and position														Return by springs	
		0,25		0,3		0,4		0,5		0,6		0,7		0,8			
		0°	90°	0°	90°	0°	90°	0°	90°	0°	90°	0°	90°	0°	90°	90°	0°
400	7	1028	869													2880	1837
	8	1736	411	2550	1225											3292	2100
	9			2259	768	3887	2396									3703	2362
	10			1967	311	3595	1939	5223	3567							4115	2624
	11					3303	1482	4931	3110	6559	4738					4526	2887
	12					3012	1025	4640	2653	6286	4281	7895	5908	9523	7536	4938	3149
	13							4348	2195	5976	3823	7603	5450	9231	7078	5349	3412
	14							4057	1738	5685	3366	7312	4993	8940	6621	5761	3674
	15							3765	1281	5393	2909	7020	4536	8648	6164	6172	3937
	16									5101	2452	6728	4079	8356	5707	6584	4199

Dimensions

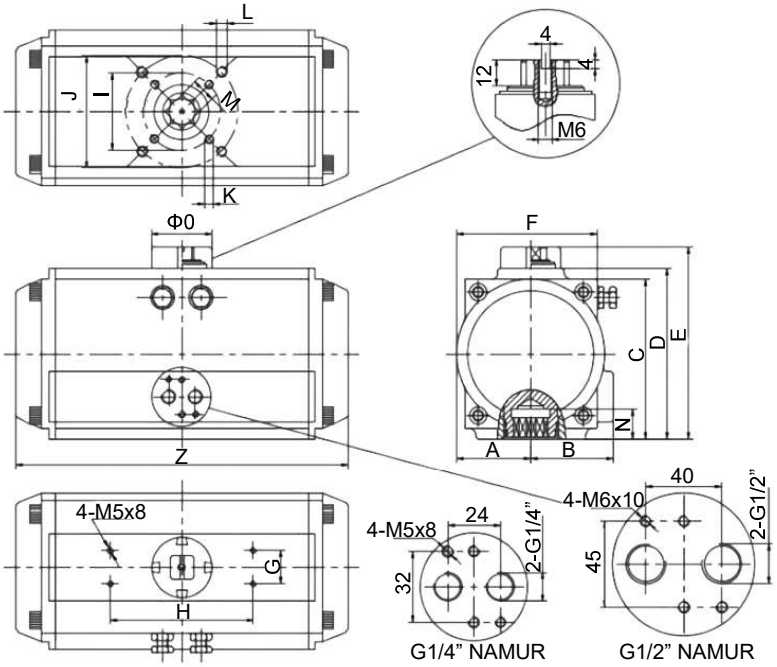

∅	A	B	C	D	E	F	G	H	∅ I	∅ J	K	L	M	N	Z	O	Air source
52	30	41,5	65,5	72	92	65	30	80	36	50	M5x8	M6x10	11	14	147	40	NAMUR G1/4"
63	36	47	81	87,5	108	72	30	80	50	70	M6x10	M8x13	14	18	168	40	
75	42	53	94	99,5	120	81	30	80	50	70	M6x10	M8x13	14	18	184	40	
83	46	57	98,5	108,7	129	92	30	80	50	70	M6x10	M8x13	17	21	204	40	
92	50	58,5	111	116,5	137	98	30	80	50	70	M6x10	M8x13	17	21	262	40	
105	57,5	64	123	133	153	110	30	80	70	102	M8x13	M10x16	22	26	268	40	
125	67,5	74,5	146	155	185	128	30	130	70	102	M8x13	M10x16	22	26	301	55	
140	75	77	161	172	202	138	30	130	102	125	M10x16	M12x20	27	31	390	55	
160	87	87	184	197	227	158	30	130	102	125	M10x16	M12x20	27	31	458	55	
190	103	103	216	230	260	189	30	130	–	140	–	M16x25	36	50	525	80	
210	113	113	236	255	285	210	30	130	–	140	–	M16x25	36	50	532	80	
240	130	130	265	290	320	245	30	130	–	165	–	M20x25	46	60	602	80	
270	147	147	299	330	360	273	30	130	–	165	–	M20x25	46	60	722	80	NAMUR G1/2"
300	162	173	330	354	384	312	30	130	–	165	–	M20x25	46	60	820	80	
350	190	195	383	410	440	362	30	130	165	254	M20x25	8xM16x25	46	60	900	80	
400	260	260	441	466	496	450	30	130	165	254	M20x25	8xM16x25	46	60	940	80	

We produce cylinders according to customer requirements

The Stránský and Petržík company specializes in customer solutions for pneumatic circuit designs, documentation of non-standard solutions, the production of atypical pneumatic elements, as well as the supply of complete functional units fitted with these elements.

In the event of a customer's request for a certain specific function, for a special dimension, for special materials of a pneumatic cylinder, the design department proposes a solution that is the best and most economical option for the customer. Due to long-term experience and the appropriate structuring of production capacities, the manufacturer can offer suitable solutions for individual and piece production of these special pneumatic elements.

The phase of design work also offers flexible cooperation when the customer is continuously informed about the method of solution and the solution is corrected according to requirements. Each solution is approved by the customer in order to be sure of the best applicability.

Main parameter range for specially designed pneumatic cylinders:
- piston diameters from 8 to 600 mm
- single-acting and double-acting
- various strokes including a design with multiple strokes (boxer)
- various material versions, including stainless steel versions
- various shapes
- various surface finishes
- different types and materials of sealing elements
- different variants of fastening elements

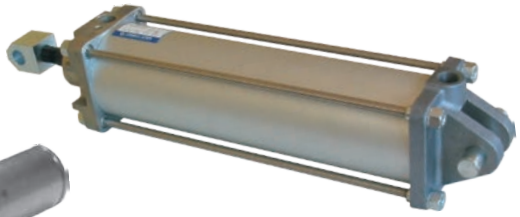

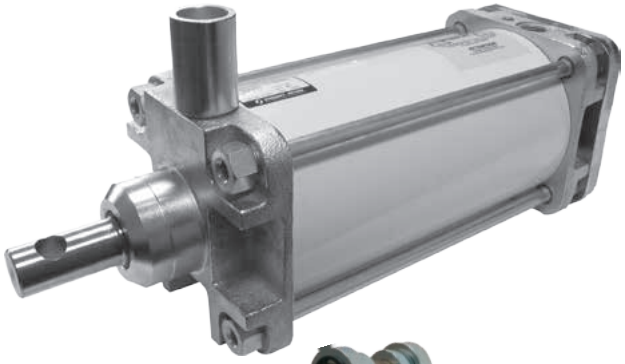

Pneumatic clamps

- piston diameters from 8 to 600 mm
- linear
- perpendicular
- any stroke or rotation angle

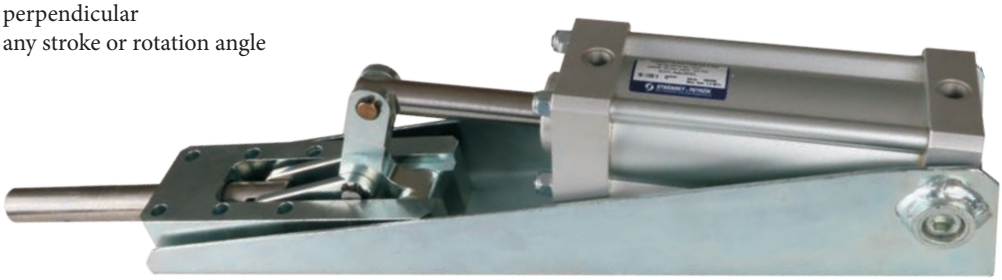

1

We manufacture complete actuators according to customer requirements

- intended primarily for controlling fittings
- double-acting, drive force up to 240 kN
- single-acting, spring force up to 65 kN
- pneumatic, max. cylinder diameter 600 mm
- hydraulic
- control circuit according to the customer's request
- the possibility of sensing the position with magnetic sensors, including the NAMUR standard
- possibility of emergency manual control
- ATEX

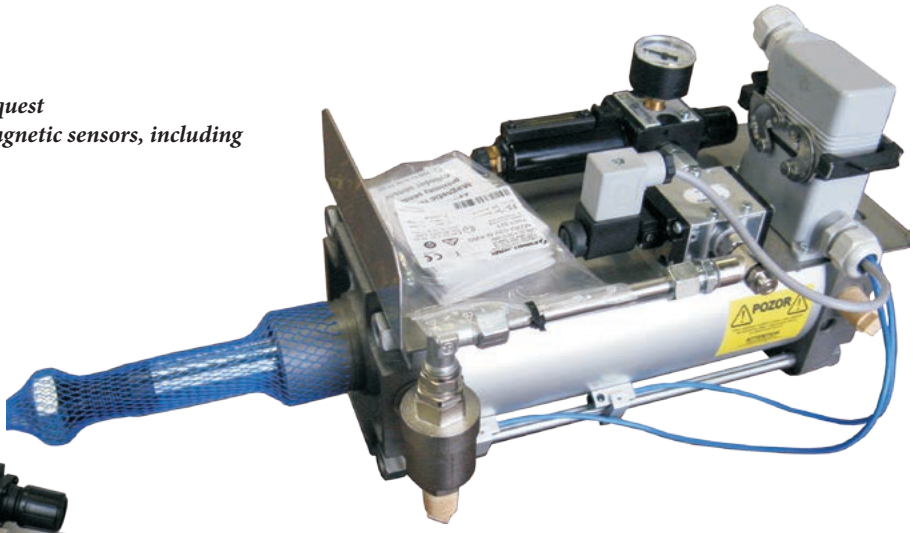

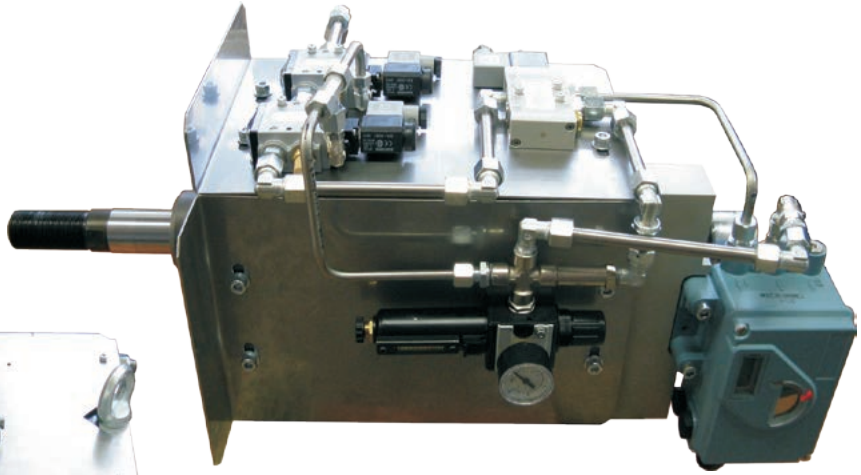

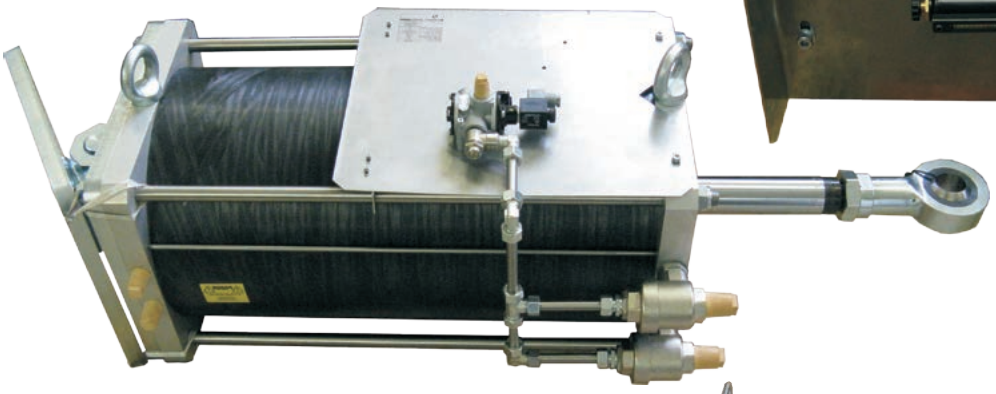

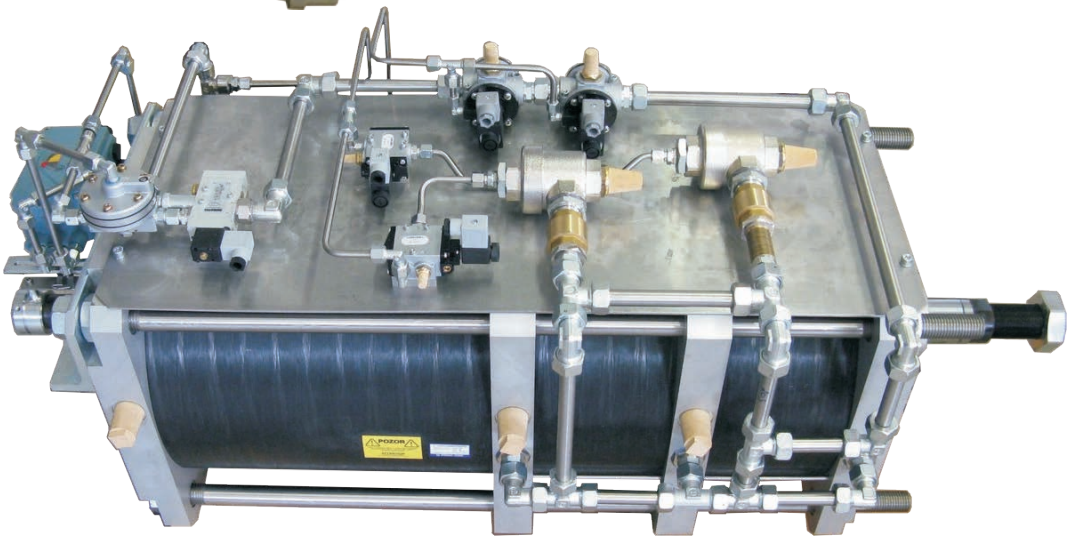

Actuators with swing (rotary) motion according to customer requirements

- single-acting
- double acting
- with gear wheel, max. torque up to 5000 Nm
- with a pulley mechanism, max. torque up to 12000 or 30000Nm
- pneumatic, max. cylinder diameter 600 mm
- hydraulic
- control circuit according to the customer's request
- the possibility of sensing the position with magnetic sensors, including the NAMUR standard
- ATEX

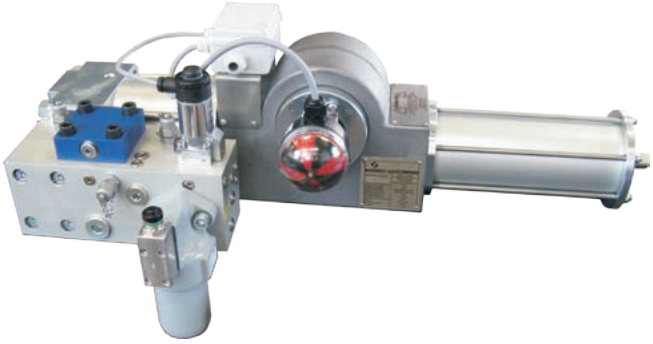

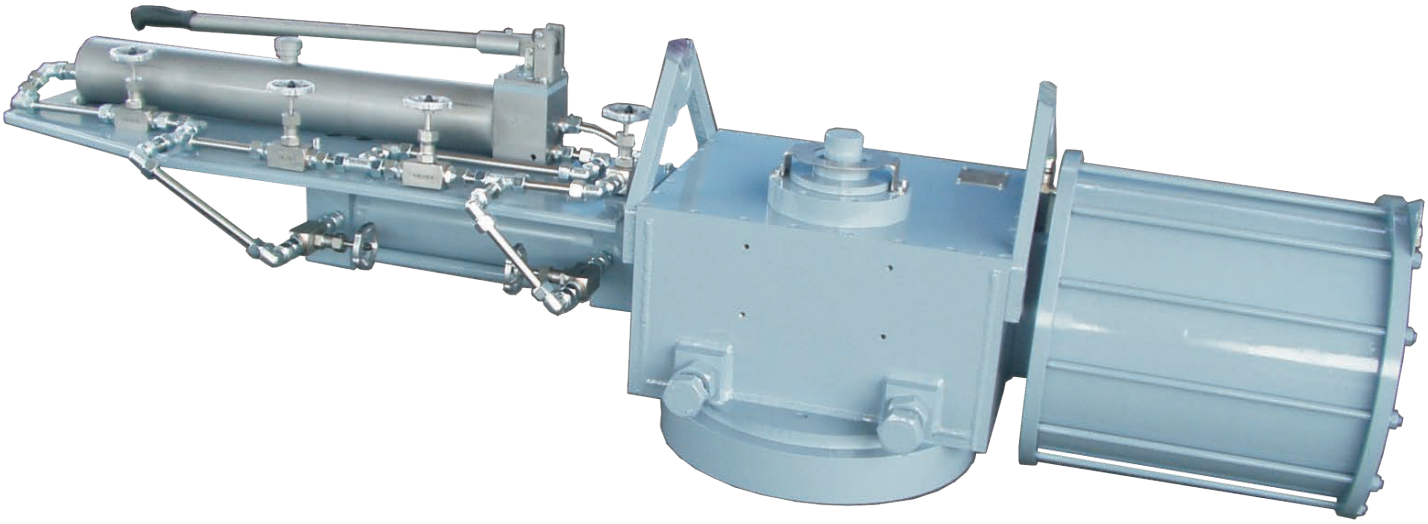

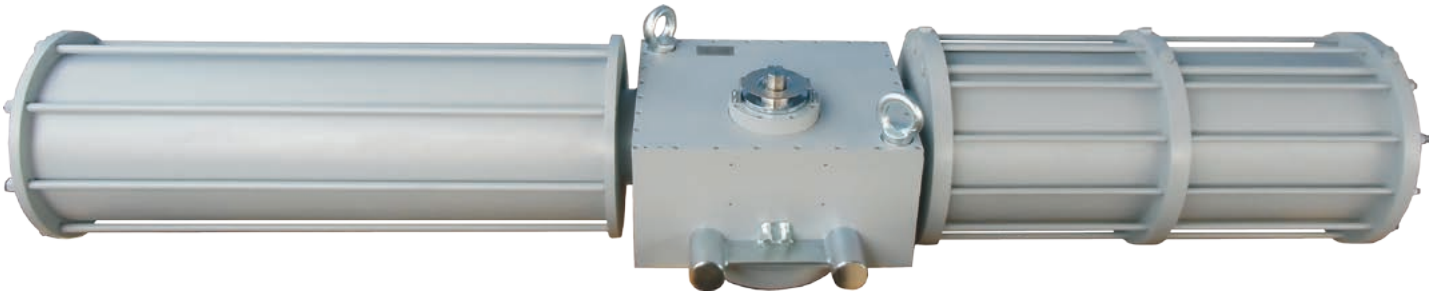

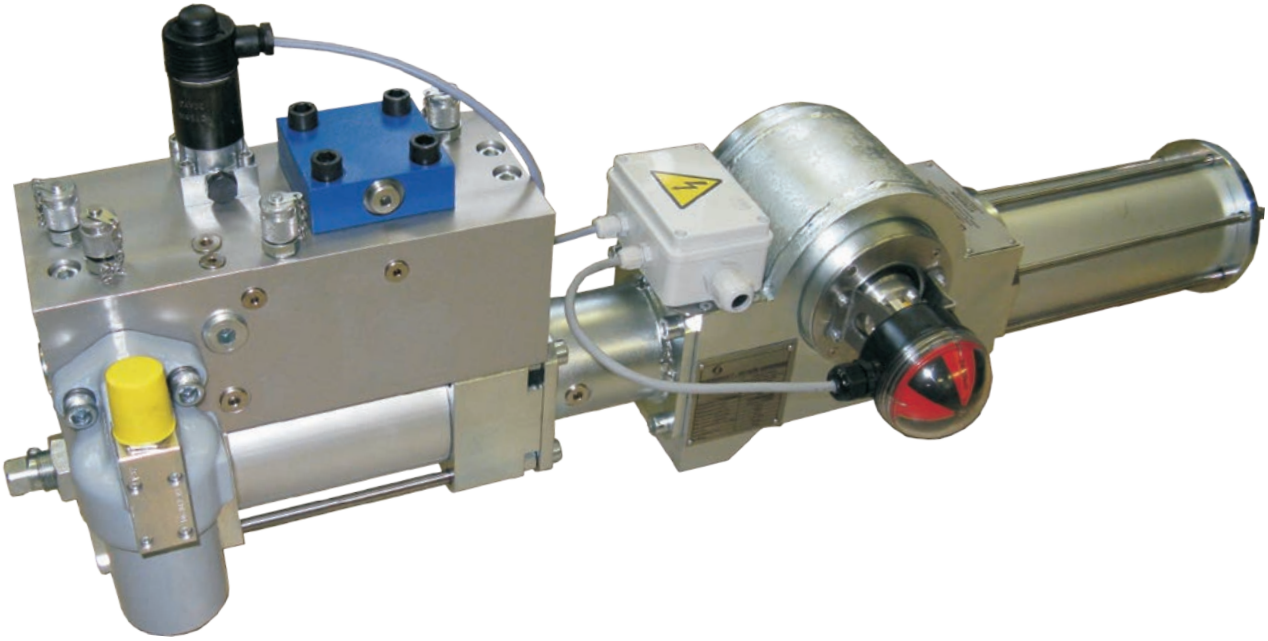

Pneumatic shake devices

Ball vibrator 2-2
Ball diameter 8 to 36 mm

Pneumatic knocker 2-4
Piston diameter 32 to 80 mm

Pneumatic knocker with air tank 2-6
Piston diameter 32 to 80 mm

Spring knocker 2-8
Piston diameter 32, 50 and 80 mm

Air cannon 2-10
Volume 2, 8 and 50 litres

2

Pneumatic clamp cylinders and grippers

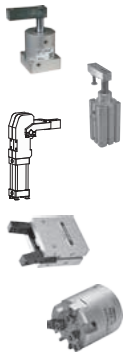

Swing clamp 2-14
Piston diameter 32 to 63 mm

Swing clamp series MCKC 2-16
Piston diameter 12 to 50 mm

Power clamp 2-17
Piston diameter 32 mm

Angular and parallel grippers series MCHA and MCHB 2-19
Piston diameter 12 to 32 mm

Three jaws parallel grippers series MCHG2 2-20
Piston diameter 16 to 125 mm

Pneumatic-hydraulic power cylinders and boosters

Pneumatic-hydraulic power cylinders series MHPD 2-21
Piston diameter 50 to 125 mm

Boosters series MHB 2-22
Pressure increase rate 7.8 to 25

Booster regulator series MVBA 2-23
Pressure increase rate 2

Booster regulator series BS 2-24
Pressure increase rate 2 and 3

PNEUMATIC SHAKE DEVICES
BALL VIBRATOR

STRÁNSKÝ A PETRŽÍK

Ball vibrator could be used for bulk material release if the bulk material was adhesed on walls of tubes or filling hopper. It can be used for such as materials which doesn't solidify by intensive shedding; in this case pneumatic knocker should be used.

Working pressure	0,6 MPa
Min. pressure	0,2 MPa
Max. pressure	1,0 MPa
Temp. range	-20°C to +80°C
Working medium	modified compressed air

2

Type	KV8	KV15	KV25	KV36
Ball diameter [mm]	8	15	25	36
Connection	G1/4“	G1/4“	G1/4“	G3/8“
Weight [kg]	0.4	0.5	0.7	1.6
Recommended hose orifice of air supply [mm]	8	10	10	12
Minimal tightening torque of fixing screws [Nm]	10.4	25	25	51

Order codes

2100 91 0 00 025 0000

Device type	
2100	pneumatic shake device

Equipment	
91	ball vibrator

Options	
00	without options

Vibrator type	
008	KV8
015	KV15
025	KV25
036	KV36

Installation and operation notes

There is necessary to adhere minimal tightening torque of fixing screws (see values in table above). Fixing screws aren't included in supply.
We recommend to fix fixing screws with Loctite 242E or similar adhesive.
There is necessary to check right tightening of fixing screws regularly to prevent their releasing.
The silencer is required on exhaust to avoid excessive noise. The silencer must be kept clear otherwise danger of vibrator body failure and injury impend.
Compressed air supply must be connected to port marked as V (eventually VSTUP, IN, or 1).

Construction / materials

- body and caps: anodized dural
- ball: precise bearing ball
- ball guide: hardened steel

Dimensions

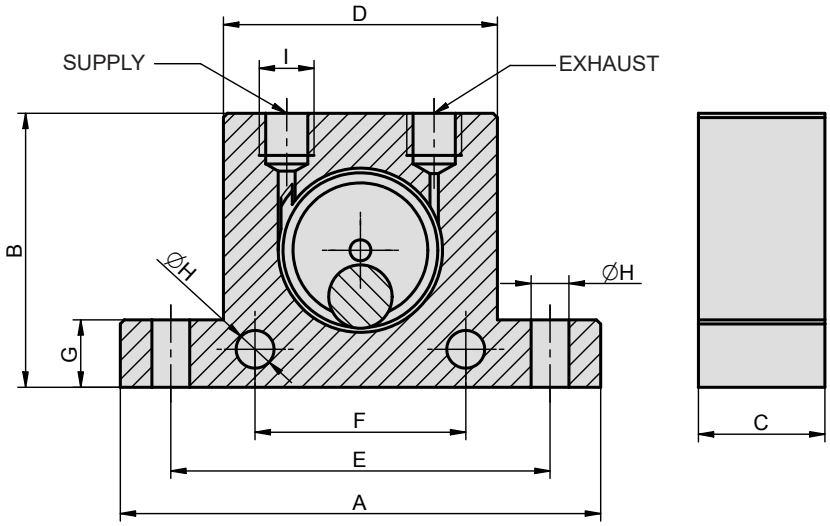

TYPE	A	B	C	D	E	F	G	H	I	Ball diameter
KV8	86	50	25	50	68	40	12	7	G1/4“	8
KV15	114	65	30	65	90	50	15	9	G1/4“	15
KV25	123	80	40	80	104	60	15	9	G1/4“	25
KV36	160	100	56	100	130	80	20	10.5	G3/8“	36

Technical data

Type	KV8 values at pressure [MPa]			KV15 values at pressure [MPa]			KV25 values at pressure [MPa]			KV36 values at pressure [MPa]		
	0.2	0.4	0.6	0.2	0.4	0.6	0.2	0.4	0.6	0.2	0.4	0.6
Frequence [1/min]	24500	31000	35000	14300	17600	20200	10100	13200	14500	7500	9300	10300
Centrifugal force [N]	180	290	370	540	820	1090	1180	2000	2420	2340	3590	4400
Air consumption [l/min]	83	145	195	122	200	280	160	280	425	260	475	675

Recommended connection

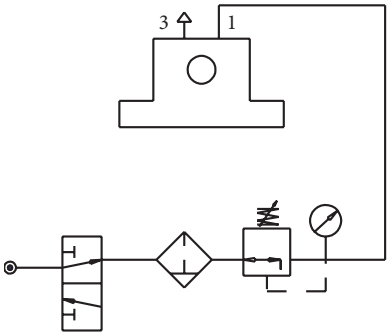

There is useful to use pressure regulator in circuit to enable vibration intensity regulation. If you need to start vibrator by another way than manually, there is necessary to use appropriate 2/2 or 3/2 valve which should be connected between pressure regulator and vibrator.

PNEUMATIC SHAKE DEVICES
PNEUMATIC KNOCKER

STRÁNSKÝ A PETRŽÍK

Pneumatic knocker could be used for bulk material release if the bulk material was adhesed on walls of tubes or filling hopper. Compared to ball vibrator, knocker can be used for materials which solidify by intensive shedding; in this case individual shakes are well-proven. Knocker should be controlled as well as double acting cylinder. From piston diameter 50 mm incl. knockers are equipped with fully adjustable cushioning at end of return piston movement.

Working pressure	0,6 MPa
Min. pressure	0,2 MPa
Max. pressure	1,0 MPa
Temp. range	-20°C to +80°C
Working medium	modified compressed air

Type	OK32	OK40	OK50	OK63	OK80
Piston diameter [mm]	32	40	50	63	80
Stroke [mm]	45	75	100	120	150
Piston weight [kg]	0.2	0.4	1	2.3	4
Recommended orifice of air supply [mm]	8	8	10	10	10
Recommended flow capacity [Nl/min]	900	900	1600	1600	2200
Impulse [Ns]	1.7	3.5	8	15	30
Kinetic energy [Nm]	7	14	32	60	100

Order codes

2100 90 0 00 0500100

Device type	
2100	pneumatic shake device

Equipment	
90	pneumatic knocker

Options	
00	without options

Knocker type	
0320045	diameter 32, stroke 45 mm
0400075	diameter 40, stroke 75 mm
0500100	diameter 50, stroke 100 mm
0630120	diameter 63, stroke 120 mm
0800150	diameter 80, stroke 150 mm

Installation and operation notes

We recommend to fix fixing screws with Loctite 242E or similar adhesive.
There is necessary to check right tightening of fixing screws regularly to prevent their releasing.
We recommend to use quick exhaust valve on exhaust on impact side not to decrease knocker's effectivity.

Construction / materials

- flange: zinc plated steel
- end cap: aluminium casting
- body: drawn dural tube, anodized
- piston: steel

Dimensions

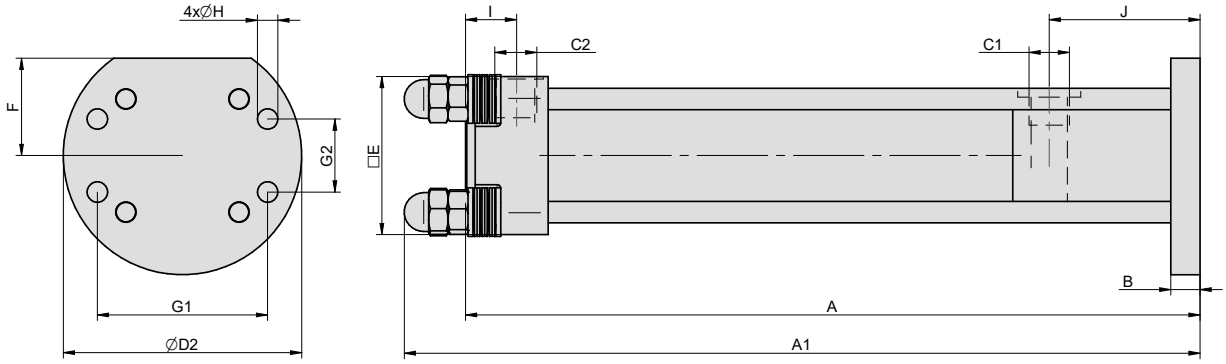

∅	A	A1	B	C1	C2	D2	E	F	G1	G2	H	I	J
32	186	-	8	G1/4“	G1/4“	69	48	28	50	18	6.4	26	40
40	228	-	10	G1/4“	G1/4“	72	55	30	55	20	6.4	24	44
50	302	327	12	G3/8“	G3/8“	98	65	40	70	30	8.4	21	62
63	352	377	15	G3/8“	G3/8“	119	75	45	85	40	10.5	20	58
80	388	422	20	G3/8“	G3/8“	138	95	55	100	50	13	20	58

Recommended connection

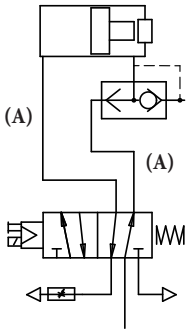

The 5/2 valve is suitable for knocker control. Valve should be placed as closest to knocker as possible, but we recommend to fix it so that valve will be isolated to shocks from knocker. We recommend to use quick exhaust valve on exhaust (mounted parallel to knocker‘s axis to prevent from shocks) so as not to decrease impact intensity. It is suitable to use speed control silencer during piston return movement, to get possible to control of return speed of piston into home position to prevent chocks.

Attention: knocker is designed for make shocks only by movement of piston towards to front cap with flange! Do not allow to make shocks during piston return movement in any case! It may be the cause of permanent damage of end cap of knocker!

(A) We recommend consulting the choice of length and diameter of the marked parts of the circuit with our technical department.

Mounting examples

Single knocker on filling hopper

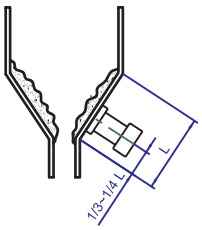

Two knockers on filling hopper
(edge distances should be different)

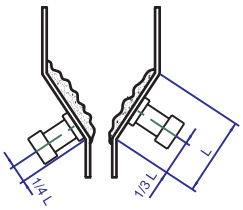

Single knocker on tube

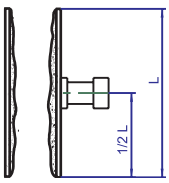

PNEUMATIC SHAKE DEVICES
KNOCKER WITH AIR TANK

STRÁNSKÝ A PETRŽÍK

Pneumatic knocker could be used for bulk material release if the bulk material was sticked on the walls of tubes or filling hopper. Compared to ball vibrator, knocker can be used for materials which solidify by intensive shedding; in this case individual shakes are well-proven. Knocker should be controlled as well as double acting cylinder. The function is then given by the impulse effect when the pressure drop is created on the piston, the air before the piston is released and then the piston is fired against the wall of the knocker. Thanks to this principle the hammer does not require high demands on the flow of the distributor and the flow through the hoses.

Working pressure	0,6 MPa
Min. pressure	0,2 MPa
Max. pressure	1,0 MPa
Temp. range	-20°C to +80°C
Working medium	modified compressed air

2

Type	OKI32	OKI40	OKI50	OKI63	OKI80
Piston diameter [mm]	32	40	50	63	80
Piston weight [kg]	0.15	0.25	0.66	1.20	2.13
Recommended orifice of air supply [mm]	4	6	6	6	8
Recommended flow capacity [Nl/min]	400	600	600	600	800
Impulse [Ns]	1.5	2.7	5.2	12	20
Kinetic energy [Nm]	7.5	14	20	60	98
Max. frequency of shocks [min^{-1}]	30	24	20	15	12
Weight [kg]	1.2	1.8	4.0	5.9	9.7

Order codes

2100 90 0 00 0500040

Device type	
2100	pneumatic shake device

Equipment	
90	pneumatic knocker with air tank

Options	
00	without options

Knocker type	
0320025	diameter 32, stroke 25 mm
0400030	diameter 40, stroke 30 mm
0500040	diameter 50, stroke 40 mm
0630050	diameter 63, stroke 50 mm
0800050	diameter 80, stroke 50 mm

Installation and operation notes

We recommend to fix fixing screws with Loctite 242E or similar adhesive.
There is necessary to check right tightening of fixing screws regularly to prevent their releasing.
We recommend to use quick exhaust valve on exhaust on impact side not to decrease knocker's effectivity.

Construction / materials

- flange: zinc plated steel
- end cap: aluminium casting
- body: drawn dural tube, anodized
- piston: steel

Dimensions

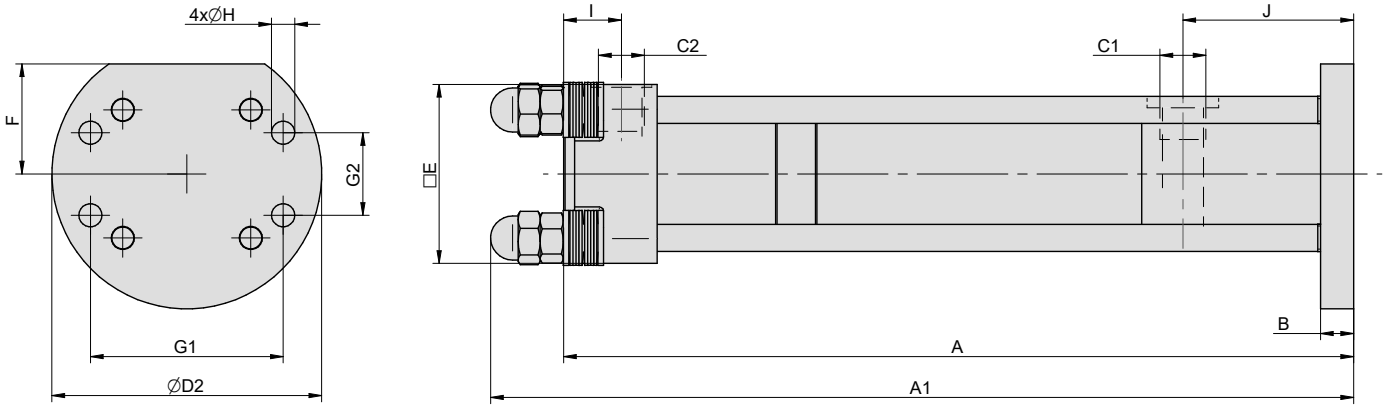

∅	A	A1	B	C1	C2	D2	E	F	G1	G2	H	I	J
32	203.5	-	8	G1/4“	G1/4“	69	48	28	50	18	6.4	26.5	40
40	225	-	10	G1/4“	G1/4“	72	55	30	55	20	6.4	24	44
50	287	314	12	G3/8“	G3/8“	98	65	40	70	30	8.4	21	62
63	307	334	15	G3/8“	G3/8“	119	75	45	85	40	10.5	20	58
80	313	347	20	G3/8“	G3/8“	138	94	50	100	50	13	20	58

Recommended connection

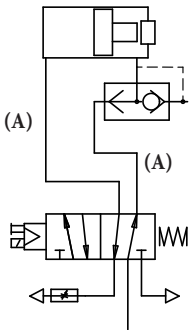

The 5/2 valve is suitable for knocker control. Valve should be placed as closest to knocker as possible, but we recommend to fix it so that valve will be isolated to shocks from knocker. We recommend to use quick exhaust valve on exhaust (mounted parallel to knocker‘s axis to prevent from shocks) so as not to decrease impact intensity. It is suitable to use speed control silencer during piston return movement, to get possible to control of return speed of piston into home position to prevent chocks.

Attention: knocker is designed for make shocks only by movement of piston towards to front cap with flange! Do not allow to make shocks during piston return movement in any case! It may be the cause of permanent damage of end cap of knocker!

(A) We recommend consulting the choice of length and diameter of the marked parts of the circuit with our technical department.

Mounting examples

Single knocker on filling hopper

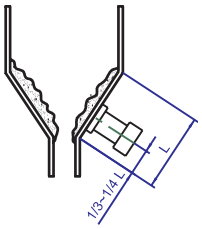

Two knockers on filling hopper
(edge distances should be different)

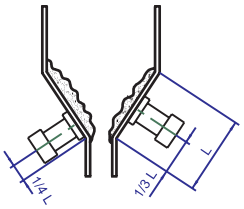

Single knocker on tube

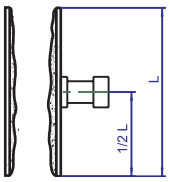

PNEUMATIC SHAKE DEVICES
SPRING KNOCKER

STRÁNSKÝ A PETRŽÍK

Pneumatic knocker could be used for bulk material release if the bulk material was adhesed on walls of tubes or filling hopper. Compared to ball vibrator, knocker can be used for materials which solidify by intensive shedding; in this case individual shakes are well-proven. The principle is simple: by pressurize of air chamber the spring is pre-tensioned and by air exhausting the spring causes the impact. This system should be used, when there is no sufficient flow rate in the line for standard pneumatic knockers without springs.

Working pressure	0,6 MPa
Min. pressure	0,4 MPa
Max. pressure	1,0 MPa
Temp. range	-20°C to +80°C
Working medium	modified compressed air

2

Type	OKP32	OKP50	OKP80
Piston diameter [mm]	32	50	80
Stroke [mm]	25	35	50
Piston weight [kg]	0.16	0.75	2.60
Impulse [Ns]	1.5	7	20
Kinetic energy [Nm]	6.5	28	75

Order codes

2100 92 0 00 0500035

Device type	
2100	pneumatic shake device

Equipment	
92	spring knocker

Options	
00	without options

Knocker type	
0320025	diameter 32, stroke 25 mm
0500035	diameter 50, stroke 35 mm
0800050	diameter 80, stroke 50 mm

Installation and operation notes

We recommend to fix fixing screws with Loctite 242E or similar adhesive.
There is necessary to check right tightening of fixing screws regularly to prevent their releasing.
The quick exhaust valve and connections of both chambers are included in delivery, compressed air should be connected to the quick exhaust valve.

Construction / materials

- flange: zinc plated steel
- end cap: aluminium casting
- body: drawn dural tube, anodized
- piston: steel

Dimensions

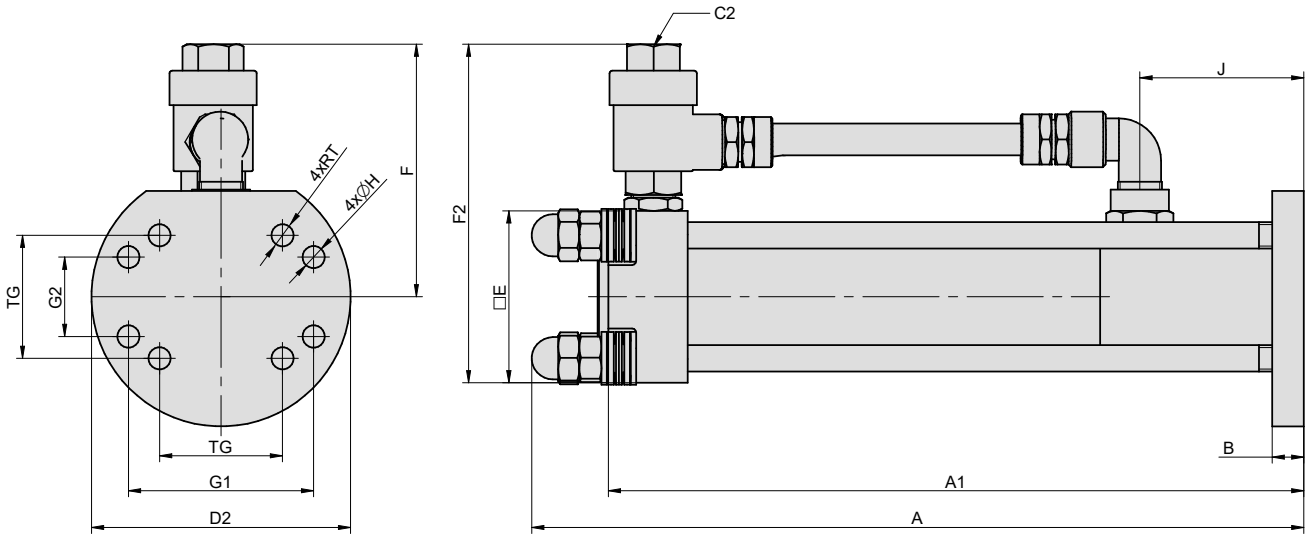

∅	A	A1	B	C2	D2	E	F	F2	G1	G2	J	H	RT	TG
32	181	177	8	G1/4“	69	48	86	110	50	18	40	6.4	M6	32.5
50	292	263	12	G3/8“	98	65	96	128	70	30	62	8.4	M10	46.5
80	338	309	20	G1/2“	150	94	126	173	110	60	58	13	M10	72

Recommended connection

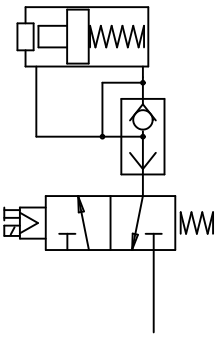

The 3/2 valve is suitable for knocker control. The force of knocker does not depend on distance between knocker and valve. We recommend to mount the valve outside, where the knocker‘s shocks couldn‘t reach the valve.

Attention: knocker is designed for make shocks only by movement of piston towards to front cap with flange! Do not allow to make shocks during piston return movement in any case! It may be the cause of permanent damage of end cap of knocker!

Mounting examples

Single knocker on filling hopper

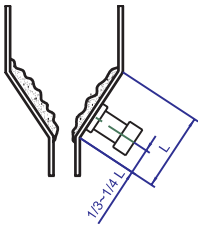

Two knockers on filling hopper
(edge distances should be different)

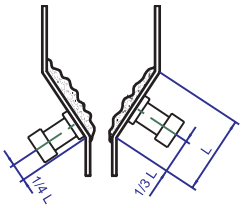

Single knocker on tube

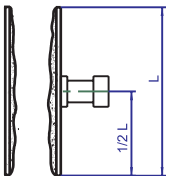

STRÁNSKÝ A PETRŽÍK

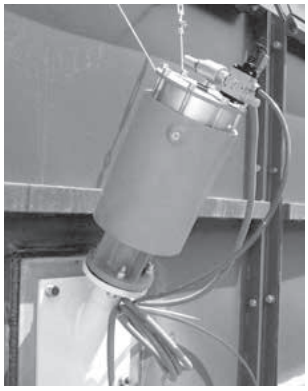

Air cannon is used to give support to free-flow of material in bunkers, hoppers, silos, etc. The volume of reservoir of air cannon is intensely expanded into the area with blocked material. This shot will release the material, which will flow by standard way.

Working pressure	0,6 MPa
Min. pressure	0,2 MPa
Max. pressure	0,6 MPa, 1,0 MPa for 50 l
Temp. range	-25°C to +90°C
Working medium	modified compressed air

Size - volume	2 litres	8 litres	50 liters
Connections	G3/8“	G1/2“	G1/2“
Weight [kg]	10	33	76
Min. tightening torque [Nm]	25	100	100
Recommended orifice of air supply [mm]	8	8	8 (12 for external pressure vessel filling)
Recommended flow capacity [Nl/min]	600	600	600 (2600 for external pressure vessel filling)
Max. number of shots per minute	10	6	1 (10 with external pressure vessel filling)
Flange connection	DN20 PN6	DN50 PN16	DN100 PN16

Order codes

Size - volume	Order codes
Air cannon, volume 2 litres	4500 2608 4406 0002
Air cannon, volume 8 litres	4500 2608 4406 0001
Air cannon, volume 50 litres	4500 2608 4406 0005

Installation and operation notes

We recommend to fix fixing screws with Loctite 242E or similar adhesive.
There is necessary to check right tightening of fixing screws regularly to prevent their releasing.
The quick exhaust valve is included in delivery, compressed air should be connected to the quick exhaust valve.
The air cannon must be fixed by restraining cable to the vessel.
Installation must be done accordingly to the users manual.

Warning

Detailed information regarding the connection, installation and operation of the cannon is given in the instruction manual of the device. You can find this manual at www.sappv.cz/r/w05e, or you can request it from the sales or technical department of Stránský a Petržík.

As an accessory to the cannon, it is possible to supply a force blowing nozzle with the possibility of adjusting the angle of the spiral air flow, which will help direct the air in the required direction. More on the following pages.

Construction / materials

Type 2 litres and 8 litres

- body, end cap: steel, zinc plated
- tube: extruded dural tube
- piston: plastic
- sealing: NBR

Type 50 litres

- body, tube, end cap: steel, zinc plated (weldment)
- piston: POM
- sealing: NBR
- pressure vessel attached with a flange connection

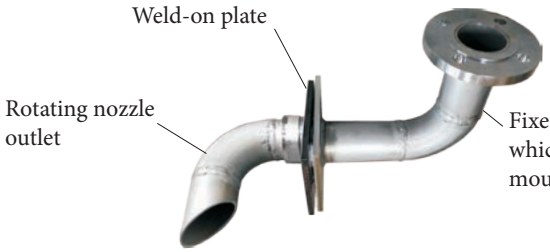

Dimensions

Type 2 litres and 8 litres

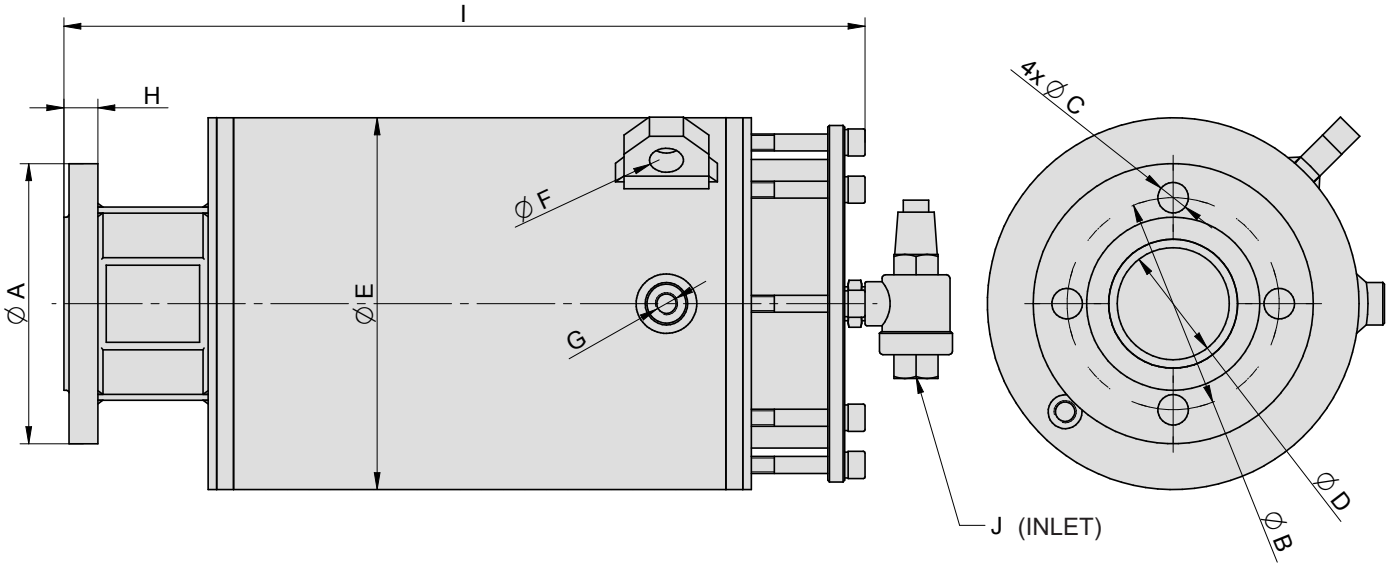

Volume	A	B	C	D	E	F	G	H	I	J
2 litres	90	65	11	20	133	12	G1/4“	14	367	G3/8“
8 litres	165	125	18	66	219	20	G1/4“	20	472	G1/2“

Type 50 litres

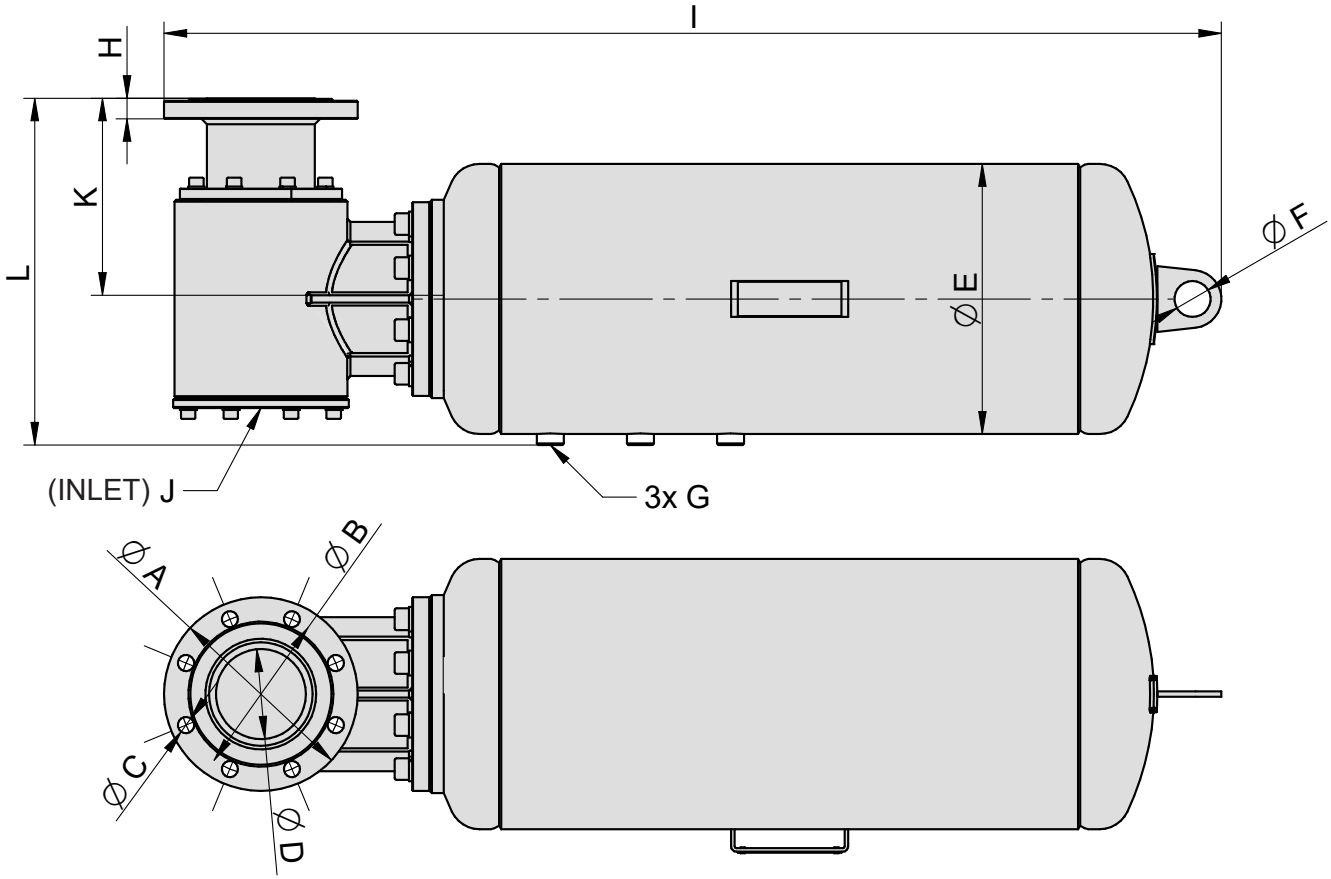

Volume	A	B	C	D	E	F	G	H	I	J	K	L
50 lites	215	180	18	100	300	40	G1/2“	23	1175	G1/2“	219	385

2

Accessories

Fixed nozzle

The fixed nozzle is used to connect the cannon to the hopper, to which the weld-on plate is welded (see below). If it is not necessary to direct the air in the hopper, it can be used separately. If it is necessary to direct the air in the hopper, a rotating nozzle is screwed onto the thread (G) and fixed (see below). It is supplied as a complete set including seals and screws required for connection to the gun. Material: zinc plated steel.

For cannons with a volume of 2 and 8 litres

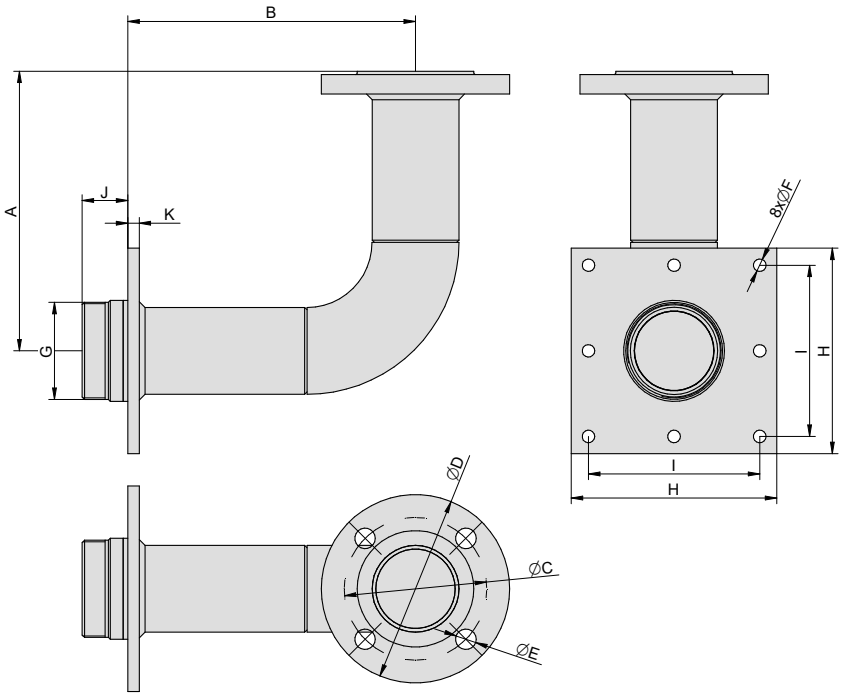

For cannon with a volume of 50 lites:

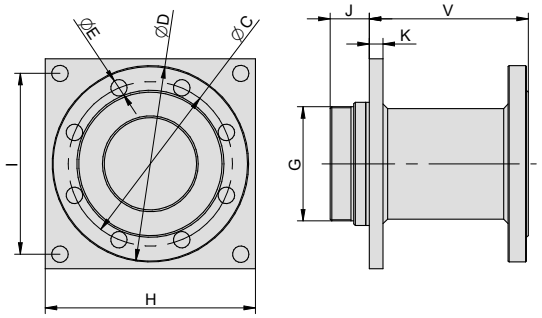

Volume	A	B	C	D	E	F	G	H	I	J	K	V	Weight	Order codes
2 litres	110	112	65	90	11	9	M35x1,5	120	100	22	10	-	2,04	9700 0030 9010 1000
8 litres	245	252	125	165	18	11	M85x2	180	150	40	10	-	8,35	9700 0030 8010 1000
50 litres	-	-	180	215	18	18	M125x2	230	198	43	15	174	14,50	9700 0083 6010 1000

Rotating nozzle

The rotating nozzle is screwed and fixed to the outlet of the fixed nozzle in the hopper. Thanks to it, it is possible to direct the air flow in the desired direction. Material: zinc plated steel.

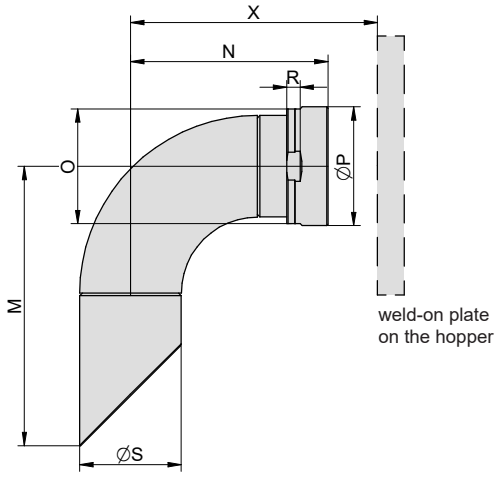

Volume	M	N	O	P	R	S	Weight	Order codes
2 litres	94	95	36	39	8	28	0,24	9700 0030 9010 2000
8 litres	209	148	86	89	10	76	2,06	9700 0030 8010 2000
50 litres	317	210	130	135	15	114	5,20	9700 0083 6010 2000

Weld-on plate

The plate is welded to the hopper and the fixed nozzle is screwed to this plate. It is necessary to create a hole in the hopper larger than øL. It is supplied as a complete set including the gasket and screws required for connection to the fixed nozzle. Material: steel without surface treatment.

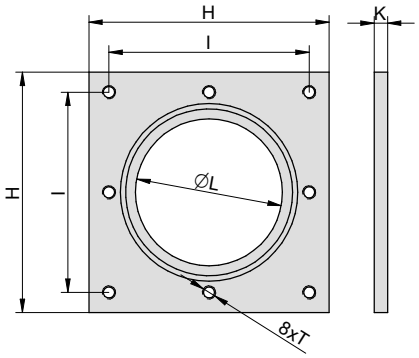

Volume	H	I	K	L	T	Weight	Order codes
2 litres	120	100	10	60	M8	0,95	9700 0030 9010 1006
8 litres	180	150	10	110	M10	1,91	9700 0030 8010 1006
50 litres	230	198	15	160	M16	5,00	9700 0083 6010 1006

Accessories
Blanking plate

The blanking plate is used to protect the opening in the fixed nozzle when there is a time delay between preparing the hopper and installing the cannon, or after removing the cannon. It prevents foreign objects or moisture from entering the hopper. It is supplied as a complete set including the screws required for connection to the fixed nozzle. Material: zinc plated steel.

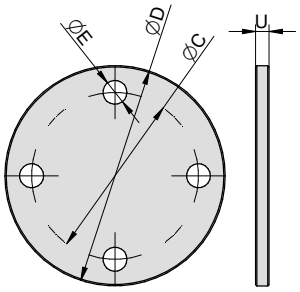

Volume	C	D	E	U	Weight	Order codes
2 litres	65	90	11	6	0,49	9700 0030 9010 1005
8 litres	125	165	18	10	2,64	9700 0030 8010 1007
50 litres	180	215	18	10	3,82	9700 0083 6010 1007

Recommended connection

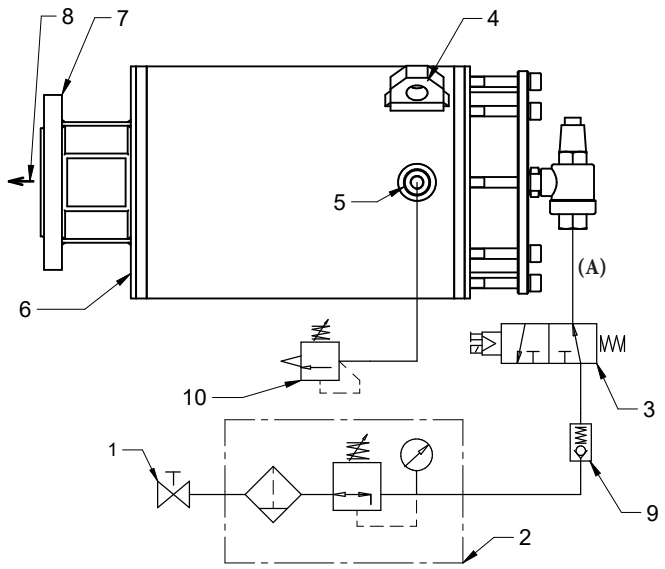

The 3/2 valve is suitable for air cannon control. We recommend to mount the valve outside, where the air cannon's shocks couldn't reach the valve.

Position	Description
1*	shutting-off valve
2*	filter with pressure regulator
3*	3/2 normally open valve
4	shackle for installing restraining cable
5	plug G1/4“ - for example for gauge
6	draining screw
7	flange connection
8	direction of air shot
9*	reverse throttle valve
10*	safety valve

Items marked by asterisk (*) are optional - they have to be ordered separately.

(A) We recommend consulting the choice of length and diameter of the marked parts of the circuit with our technical department.

Mounting examples

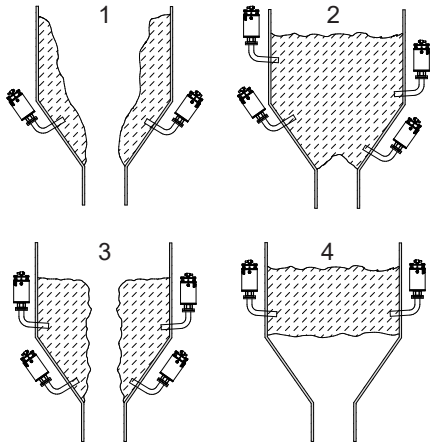

There are four main problems associated with interruption of free flow of bulk solids in bunkers, hoppers, silos transfer chutes etc., as shown in Figs. 1, 2, 3 and 4. Please note these illustrations are for general information only, there being various other blocking scenarios which occur

1) Clinging
   Material deposits clinging to the sides of hoppers, reducing free-flow and creating the possibility of contamination of new material if clinging deposits break free from sides of vessel.
2) Bridging
   Blockage at the outlet of the storage hopper resulting in complete loss of production. This is a common fault where fine materials are being processed and the moisture content is higher than normal.
3) Ratholing
   An extreme form of clinging, reducing free-flow and requiring regular topping up of small quantities of material. Loss of production will be the result of this condition and the solution, i.e., high pressure lancing vibration etc., can result in huge lumps of material breaking away and blocking the outlet.
4) Arching
   Type of bridging occurring at a high level within the hopper. This condition creates a dangerous situation for operators when trying to clear the blockage and also a possible maintenance /damage issue for the works engineer and the high costs resulting from the loss of production.

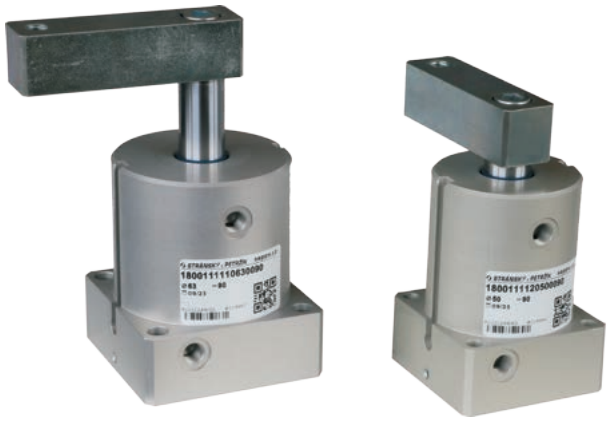

Pneumatic swing clamp cylinders are used for various types of clamping. Thanks to the design, it is easy to fit the clamping material because the clamping arm rotates over the material during clamping and then clamps. The angle of rotation is 90° as standard. With the double-sided arm, it is possible to clamp the material on two opposite sides at the same time. The clamps have a magnetic piston for contactless position sensing and do not have cushioning at the end positions. The single-sided clamping arm can be turned to any position, the double-sided arm has a fixed position.

Working pressure	0,6 MPa
Min. pressure	0,1 MPa
Max. pressure	1,0 MPa
Temp. range	-5°C to +60°C
Working medium	modified compressed air

Piston diameter [mm]	32	40	50	63
Thrust at 0.6 MPa [N]	482	754	1178	1870
Return (clamp) force at 0.6 MPa [N]	360	630	980	1680
Total stroke [mm]	26	26	30	30
Clamp stroke (linear movement only) [mm]	13	13	13	13
Stroke during swing [mm]	13	13	17	17
Non-rotating accuracy [°]	±2	±1,3	±1,2	
Available speed range [mm.s^{-1}]	50 - 200			
Port size	G1/8“	G1/8“	G1/8“	G1/8“
Weight - without arm / single sided arm / double sided arm [kg]	0,45 / 0,65 / 0,85	0,61 / 0,83 / 1,00	0,95 / 1,33 / 1,67	1,24 / 1,66 / 1,95

Order codes

18001 11 1 2 050 0090

Clamping arm	
0	without arm (with piston rod end for single side arm)
1	single-sided
2	double-sided

Rotation	
1	clockwise „R“
2	counterclockwise „L“

Piston diameter	
032	32 mm
040	40 mm
050	50 mm
063	63 mm

Rotation angle / repair kit	
0090	rotation angle 90°
9999	repair kit

Rotation

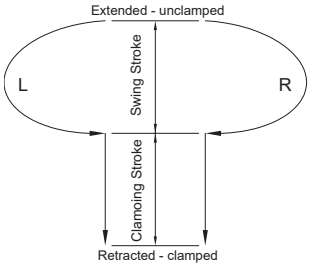

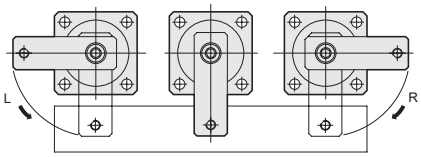

Arm position when the material is clamped

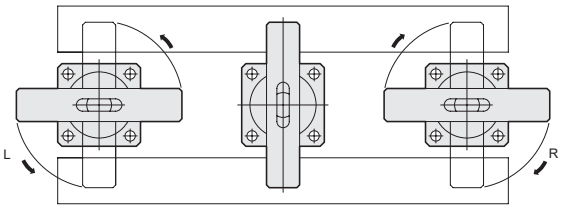

Arm position when the material is clamped

Construction / materials

- body, end cap: dural, anodized
- piston rod: CK45
- arm: steel, zinc plated

In case of proximity sensing request, please use switches series KT-50 or RZT7/MZT8 - see page 3-2 and 3-4 for details

Dimensions

Clamp with single-sided arm

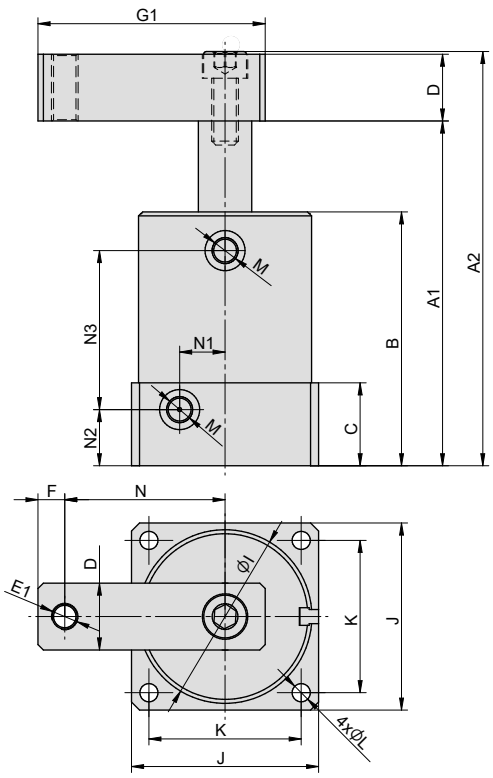

Piston rod end detail for single-sided arm and for version without arm:

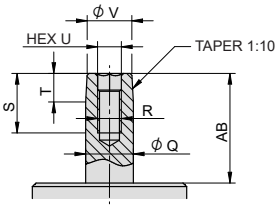

Piston rod end detail for double-sided arm:

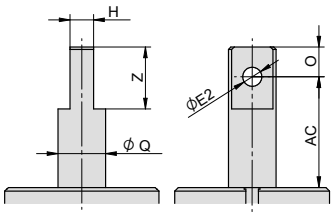

Clamp with double-sided arm

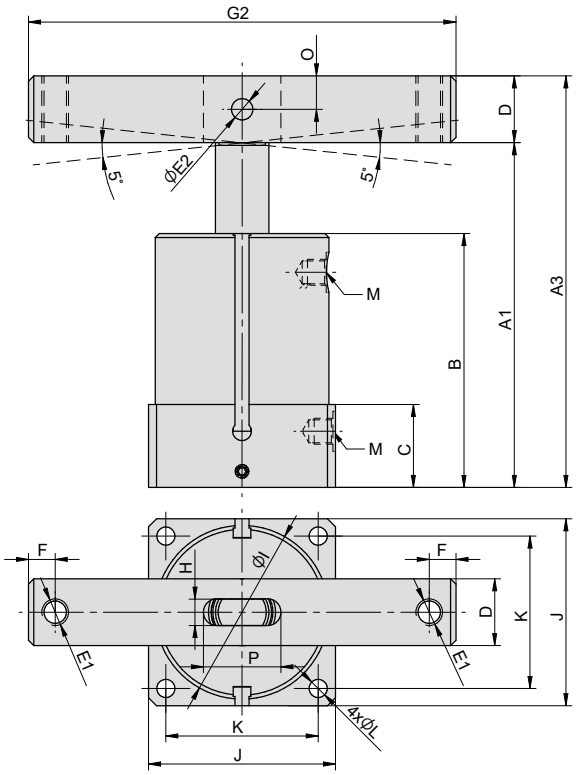

Ø	A1	A2	A3	AB	AC	B	C	D	E1	E2	F	G1	G2	H	I	J
32	113	134	133	39,5	40	83	28	20	M8	8	8	70	140	9	46	50
40	115	136	135	39,5	40	85	28	20	M8	8	8	75	140	9	55	60
50	129	155	154	46	46,5	95	31	25	M10	8	10	85	160	10	65	70
63	129	155	154	46	46,5	95	31	25	M10	8	10	95	160	10	78	83

Ø	K	L	M	N	N1	N2	N3	O	P	Q	R	S	T	U	V	Z
32	40	5,6	G1/8“	50	11,5	19	55	10	25	16	M8	20	9,5	8	15,1	21
40	48	6,8	G1/8“	55	14	19	57	10	25	16	M8	20	9,5	8	15,1	21
50	57	6,8	G1/8“	60	17	21	59,5	12,5	29	20	M10	25	12	10	18,7	26
63	67	9	G1/8“	70	20	21	59,5	12,5	29	20	M10	25	12	10	18,7	26

Caution

Do not allow lateral forces to act on the clamping arm. It could cause irreversible damage to the internal parts. The clamp is designed for clamping forces in the direction of the clamp axis (in the direction of the clamping stroke).

Caution

In order to avoid shocks in end positions (and thereby reduce the service life or damage internal parts), it is necessary to use flow control valves for both directions of movement.

Loosening, fixing, rotating or replacing the clamping arm

When loosening or fastening the arm, it is necessary to secure it in the desired position. Never tighten the locking screw without securing the clamping arm. Torque transferred to the piston rod could damage internal parts.

After unscrewing the fixing screw, tap your arm in the direction of the axis of the clamp. Do not release it by tapping it from the side, it could damage the internal parts.

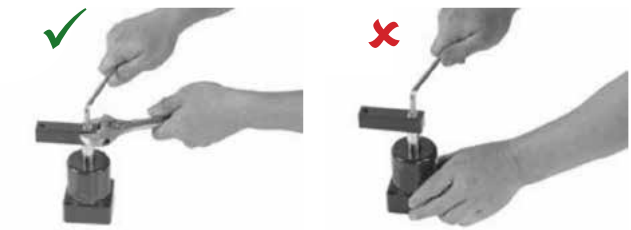

PNEUMATIC SWING CLAMP CYLINDERS SERIES MCKC

STRÁNSKÝ A PETRŽÍK

Pneumatic swing clamp cylinders are used for various types of clamping. Thanks to the design, it is easy to fit the clamping material because the clamping arm rotates over the material during clamping and then clamps. For the MCKC series, the angle of rotation is fixed - 90°. The clamps have a magnetic piston for non-contact position sensing.

For more information like technical data and dimensions, please visit our web page on www.sappv.cz/r/w07e

Working pressure	0,6 MPa
Min. pressure	0,1 MPa
Max. pressure	1,0 MPa
Temp. range	-5°C to +60°C
Working medium	modified compressed air

2

Piston diameter [mm]	12	16	20	25	32	40	50
Thrust at 0.6 MPa [N]	67	120	188	294	482	754	1178
Return (clamp) force at 0.6 MPa [N]	51	90	120	226	361	633	989
Clamp stroke [mm]	10, 20		10, 20, 30				10, 20, 30, 50
Rotary stroke [mm]	7,5		9,5		15		19
Non-rotating accuracy [°]	±2	±1,3	±1,2		±1		
Available speed range [mm.s^{-1}]	50 - 200						
Port size	M5				G1/8“		G1/4“
Weight 0 mm stroke -with arm [kg]	0,066	0,100	0,266	0,319	0,573	0,652	1,170
Weight 0 mm stroke - without arm [kg]	0,052	0,066	0,176	0,229	0,382	0,461	0,820
Weight add. per 1 mm stroke [kg]	0,016	0,023	0,038	0,046	0,069	0,074	0,109

Order codes

P MCKC 32 10 L N G

	Piston diameter
12	12 mm
16	16 mm
20	20 mm
25	25 mm
32	32 mm
40	40 mm
50	50 mm

	Stroke
10	10 mm
20	20 mm
30*	30 mm
50**	50 mm

*) Only for piston dia. 20 mm and larger

**) Only for piston dia. 50 mm

	Rotation
L	left
R	right

	Arm	
	yes	
N	no	

	Air supply thread
	M5 for piston dia. 12 to 25 mm
G	G1/8“ for piston dia. 32 and 40 mm G1/4“ for piston dia. 50 mm

Rotation

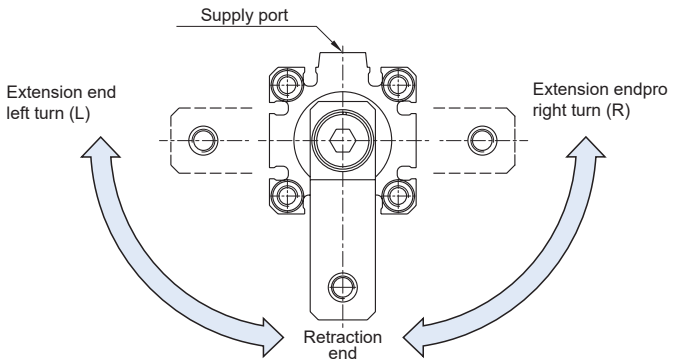

In case of proximity sensing request, please contact our technical dept. for details

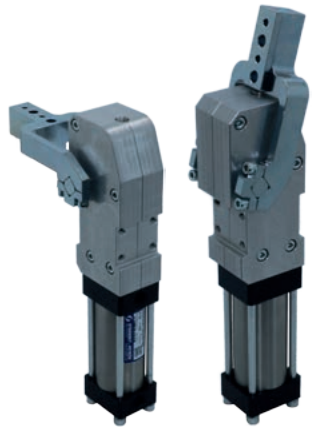

Pneumatic power clamps are especially suitable for clamping elements during welding, in the automotive industry or where it is necessary that the clamp does not take up a lot of space. Advantage of the clamp is that the parts moving rectilinearly are covered and are thereby protected from flying irons and dust. After clamping, the clamp is mechanically secured and there is no risk of loosening in the event of a compressed air failure.

Min. pressure	0,4 MPa
Max. pressure	0,6 MPa
Ambient temp.	+5°C to +45°C
Working medium	modified compressed air

Piston diameter [mm]	**32**
Connections	G1/8“
Release angle [°] (depends on arm*)	105
Clamping moment (0.5 MPa) [Nm]	50
Locking torque of the clamped position [Nm]	75
Clamping force for arm length 100 mm at pressure 0,5 MPa [N]	500
Working pressure [MPa]	0,4 to 0,6
End position damping method	rubber stop (requires use of throttle valves on both threaded connections)
Recommended min. clamping/release time [s]	1
Weight [kg]	0,98 (with the arm)
Weight of the clamping arm [kg]	0,23

Order codes

18201 10 00 032 0105

Arm position	
10	90°
20	180°
00	without arm

Piston diameter	
032	32 mm

Arm opening angle	
0105	105°

In case of a position sensing request, please contact our technical department

Caution

The clamp must be correctly adjusted in its working (clamped) position. The adjustment procedure is described on the next page.

Dimensions

Arm position 90°

Arm position 180°

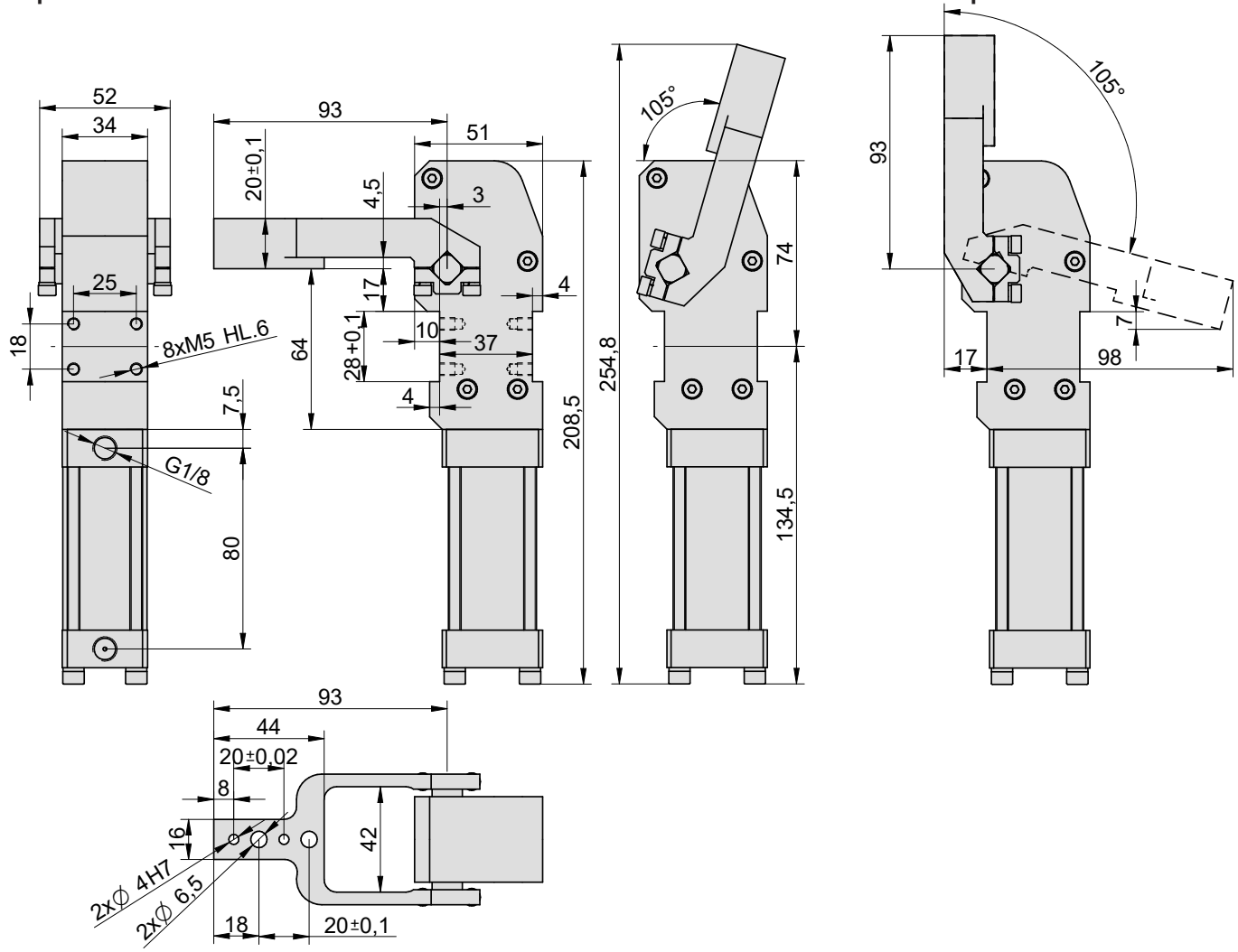

Clamp adjusting

For the clamp to function properly, it is very important to ensure its correct adjustment. Correct adjustment ensures the best use of force, low wear and ensures self-locking of the clamp.

Setting procedure:

1. Fit the clamp with the necessary accessories – (clamping tools).
2. Bring the clamp into the closed state
3. Adjust the clamp grip so that it is closed with minimal play without clamping force (can be verified, for example, with paper).
4. Pre-tension the clamping device with screws, or support it with a shim of the specified thickness, in accordance with the support graph.
5. Pre-tensioning (supporting) must respect the rotation arm in the center of gravity of the clamping device and the value of the compressed air of the clamp. As the arm is extended, the pre-tensioning (supporting) also increases linearly.
6. After test clamping, verify the self-locking of the clamp by releasing the compressed air. The clamps must hold clamped.

If a too slim shim (low pre-tension) is used, the clamp will not be used sufficiently and the clamping force will be low.
If a too thick shim is used (significant preload), the clamp will not reach the self-locking clamping area and will again not achieve the necessary clamping force due to the low gear ratio of the link.

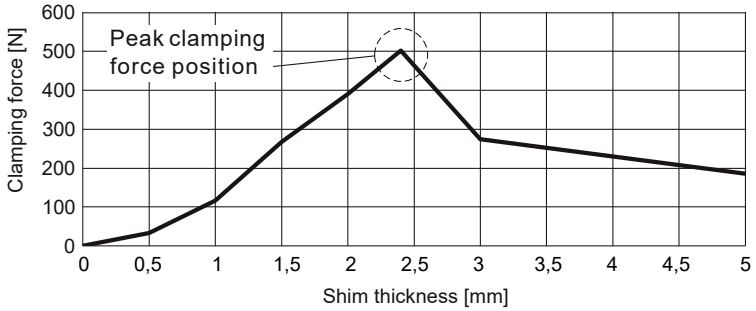

Dependence of clamping force on the shim thickness at 0,5 MPa

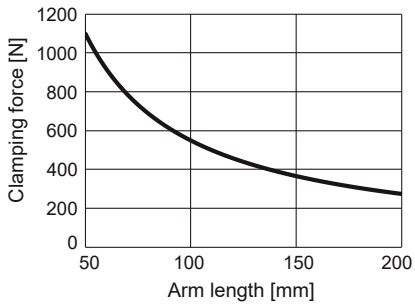

Dependence of clamping force on arm length at 0,5 MPa

PNEUMATIC ANGULAR AND PARALLEL GRIPPERS SERIES MCHA AND MCHB

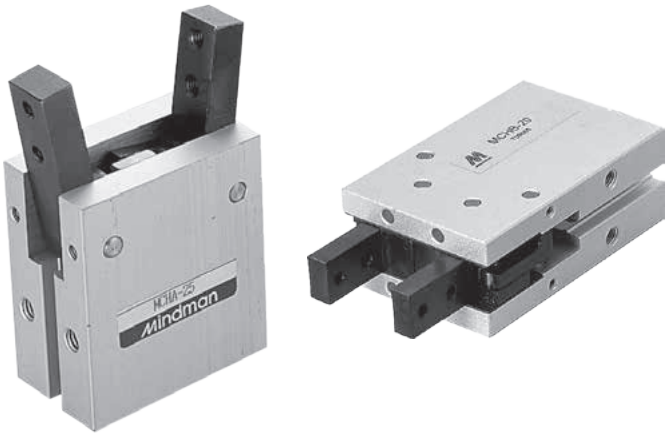

Pneumatic grippers are used for accurate object handling in automated operation. There are angular and parallel grippers available, which allows to gripe objects with various shapes. Wide size range warrants use for small as well as for heavy objects. Grippers are delivered with magnet as standard.

For more information, please visit our web page on www.sappv.cz/r/w09e or www.sappv.cz/r/w10e

Working pressure	0,5 MPa
Min. pressure	0,15 MPa
Max. pressure	0,7 MPa
Temp. range	-5°C to +60°C
Working medium	modified compressed air

2

Piston diameter [mm]	12	16	20	25	32
Clamping force at 0.5 MPa [N] for series MCHA closed / opened*	5.5 / 7	12.5 / 17	24 / 32.5	48 / 62	86 / 114.5
Clamp / release angle for series MCHA [°]	-10 to +30				
Clamping force at 0.5 MPa [N] for series MCHB closed / opened*	8 / 5	24 / 18	47 / 35	75 / 60	100 / 85
Arm stroke for series MCHB [mm]	6	8	12	14	16
Connection	M3	M5	M5	M5	M5
Max. frequency of clamping [number of cycles per minute]	180				
Max. arm length [mm]	30	40	60	70	85

*) For arm length L= 30 mm

Order codes

P MCHA 20

Gripper type	
MCHA	angular 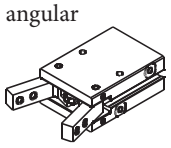
MCHB	parallel 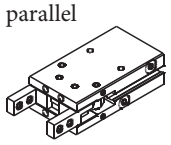

Piston diameter	
12	12 mm
16	16 mm
20	20 mm
25	25 mm
32	32 mm

Dimensions of series MCHA

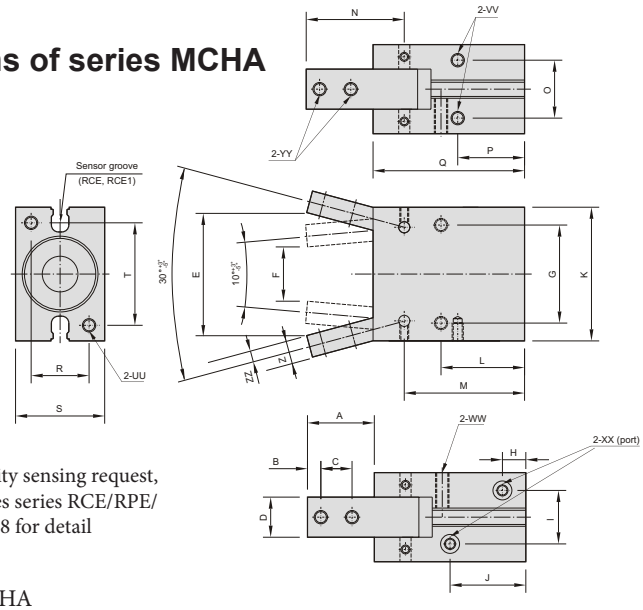

In case of proximity sensing request, please use switches series RCE/RPE/RNE - see page 3-8 for detail

Dimensions of series MCHB

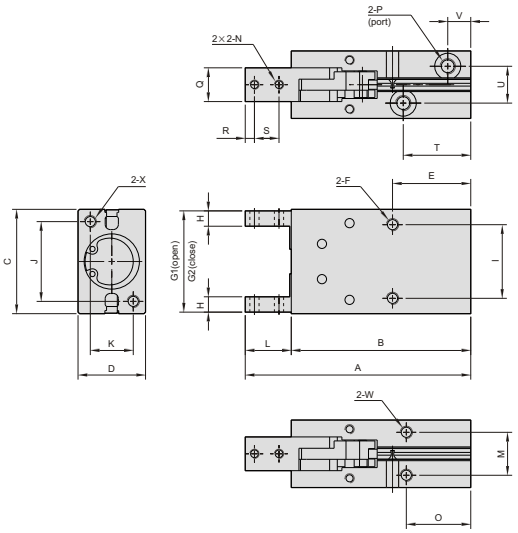

Dimensions of series MCHA

∅	A	B	C	D	E	F	G	H	I	J	K	L	M	N	O	P	Q	R	S	T	UU	VV	WW	XX	YY	Z	ZZ
12	15.4	3	6	7	26.3	9	20	7.5	10.2	23.5	28	20	32.9	21.5	10.2	16	39	10	16	22	M3	M3	M3	M3	M3	5	2.5
16	17.5	3	8	9	31.1	14	24	7.5	12	22	34	22.5	35	25	14	18	42.5	14	22	26	M4	M4	M4	M5	M3	6	3
20	22	4	10	12	40.1	18	30	8	13	25	45	25	39.5	32.5	16	19	50	16	26	35	M5	M5	M5	M5	M4	7	3.5
25	26	5	12	14	47.9	21	36	8.5	18	28	52	28.5	45.5	38.5	20	21.5	58	20	32	40	M6	M6	M6	M5	M5	9	4
32	30	6	14	18	55.1	24	44	10.5	24	34	60	37.5	54	44	26	30	68	26	40	46	M6	M6	M6	M5	M6	10	5

Dimensions of series MCHB

∅	A	B	C	D	E	F	G1	G2	H	I	J	K	L	M	N	O	P	Q	R	S	T	U	V	W	X
12	63.5	50.5	28	16	20	M3 hl.5	27	21	4	18	17	10	13	10	M3	16	M3	7	3	6	23	10.2	7.5	M3 hl.5	M3 hl.5
16	73.5	58.5	34	22	25.5	M4 hl.11	33	25	5	24	26	14	15	14	M3	21	M5	11	3	8	22	12	7.5	M4 hl.7	M4 hl.7
20	88.5	69.5	45	26	25	M5 hl.8	44	32	6	30	35	16	19	16	M4	19	M5	12	4	10	26	13	8	M5 hl.8	M5 hl.8
25	102.5	78.5	52	32	28	M6 hl.10	51	37	8	36	40	20	24	20	M5	22	M5	14	5	12	29	18	8.5	M6 hl.10	M6 hl.10
32	120.5	90.5	60	40	34	M6 hl.10	59	43	10	44	46	24	30	26	M6	26	M5	20	7	15	35	24	10.5	M6 hl.10	M6 hl.10

PNEUMATIC THREE JAWS PARALLEL GRIPPERS SERIES MCHG2

STRÁNSKÝ A PETRŽÍK

Pneumatic grippers are used for accurate object handling in automated operation. Three jaws grippers are used for handling with rotary objects. Wide size range warrants use for small as well as for heavy objects. Grippers are delivered with magnet as option.

For more information, please visit our web page on www.sappv.cz/r/w11e

Working pressure	0,5 MPa
Min. pressure	0,2 MPa pro ∅16 and 25 0,1 MPa for ∅32 and more
Max. pressure	0,6 MPa
Temp. range	-10°C to +60°C
Working medium	modified compressed air

2

Piston diameter [mm]	16	20	25	32	40	50	63	80	100	125
Clamping force at 0.5 MPa [N] closed / opened*	14 / 16	25 / 28	42 / 47	74 / 82	118 / 130	187 / 204	335 / 359	500 / 525	750 / 780	1270 / 1320
Arm stroke [mm]	4	4	6	8	8	12	16	20	24	32
Connection	M3	M5	M5	M5	M5	M5	M5	G1/8“	G1/4“	G3/8“
Max. frequency of clamping [no. of cycles per min.]	120			60				30		
Repeatability [mm]	± 0.01									

*) For arm length L=20 mm for ∅16 to 25, 30 mm for ∅32 to 63, 50 mm for ∅80 to 125

Order codes

P MCHG2 16 M

Gripper type	
MCHG2	three jaws parallel

Piston diameter	
16	16 mm
20	20 mm
25	25 mm
32	32 mm
40	40 mm
50	50 mm
63	63 mm
80	80 mm
100	100 mm
125	125 mm

Magnet	
M	with magnet

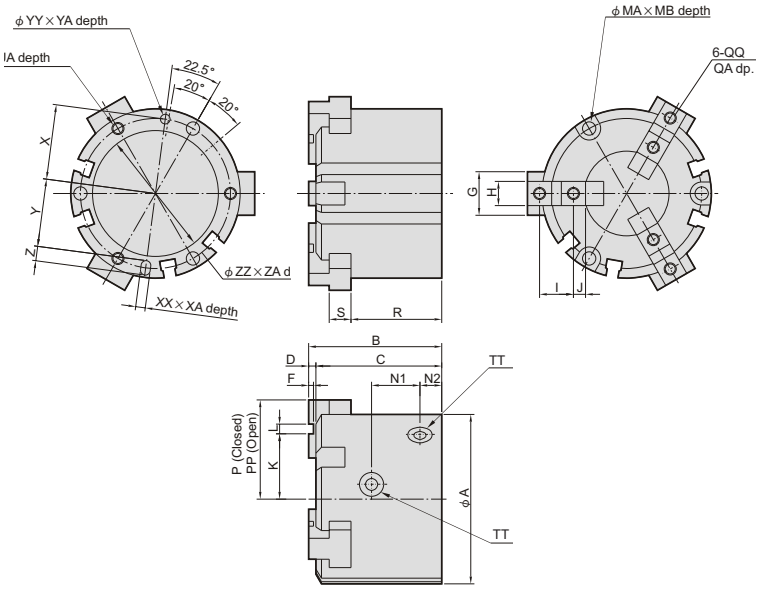

Dimensions

∅	A	B	C	D	F	G	H h9	I	J	K	L H9	MA	MB	MM	MR	N1	N2	P	PP	QA	QQ	R	S	TT	UA	UU	X	XA	XX H9	Y	YY H9	Z	ZA	ZZ H9
16	30	35	32	3	2	8	5	6	2	11	2	6.5	8	3.4	25	11	7	15	17	5	M3	25	4	M3	4.5	M3	12.5	2	2	11	2	3	1.5	17
20	36	38	35	3	2	10	6	7	2.5	13	2	6.5	9.5	3.4	29	13	7	18	20	6	M3	27	5	M5	6	M3	14.5	2	2	13	2	3	1.5	21
25	42	40	37	3	2	12	6	8	3	16	2	8	10	4.5	34	15	7	21	24	6	M3	28	5	M5	6	M4	17	3	2	14.5	3	5	1.5	26
32	52	44	41	3	2	14	8	11	4.5	21	2	8	9	4.5	44	16	8	28	32	8	M4	30.5	6	M5	6	M4	22	3	3	19.5	3	5	2	34
40	62	47	44	3	2	16	8	12	4.5	23	3	9.5	9	5.5	53	17	9	31	35	8	M4	32	7	M5	7.5	M5	26.5	4	4	23.5	4	6	2	42
50	70	55	52	3	2	18	10	14	5	27	4	9.5	12	5.5	62	20	9	35	41	10	M5	37.5	9	M5	10	M5	31	4	4	28	4	6	2	52
63	86	66	62	4	3	24	12	17	5.5	34	6	11	14	6.6	76	22	12	43	51	10	M5	44	11	M5	9	M6	38	5	5	34.5	5	7	2.5	65
80	106	82	77	5	4	28	14	20	6	44	8	11	19	6.6	95	27	13.5	53.5	63.5	12	M6	56	12	G1/8“	12	M6	47.5	6	6	43.5	6	8	3	82
100	134	96	90	6	4	34	18	23	7.5	42.5	8	14	21	9	118	30.6	18	66	78	16	M8	63	15	G1/4“	16	M8	59	6	8	54	8	10	4	102
125	166	122	114	8	6	40	22	31	10.5	50	10	17.5	34	11	148	38	23.5	82	98	20	M10	84	18	G3/8“	20	M10	74	8	10	68	10	12	6	130

PNEUMATIC-HYDRAULIC POWER CYLINDERS SERIES MHPD

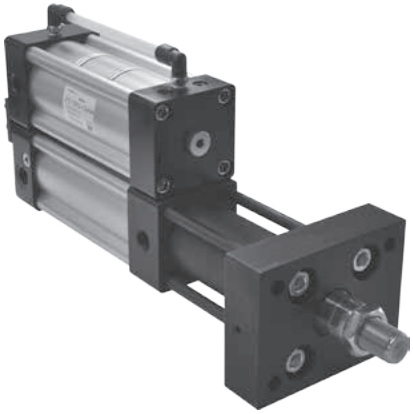

Pneumatic-hydraulic boosters are used for generating high force using standard air pressure. They are designed to save energy, time, space and money in wide variety of applications. These abilities and benefits of power cylinders make them ideal component in many applications, you can use them for such operation as marking, forming, punching riveting, shearing, stearing, straightening, and so on.

For more information, please visit our web page on www.sappv.cz/r/w12e

Working pressure	0,3 to 0,8 MPa
Temp. range	-10°C to +60°C
Working medium	modified compressed air
Installation	vertical (piston rod down)

Type	1T	3T	5T	8T	10T
Tube inside diameter [mm]	50	70	80	100	125
Piston rod diameter [mm]	30	40	50	60	70
Auxiliary stroke / working stroke [mm] *	50, 75, 100, 150, 200 / 5, 10, 15, 20				

*) See table below for allowed combination of auxiliary and working strokes

Order codes

P MHPD 3T 100 — 10 Z

Power cylinder	
MHPD	pneumatic-hydraulic

Type	
1T	diameter 50 mm
3T	diameter 70 mm
5T	diameter 80 mm
8T	diameter 100 mm
10T	diameter 125 mm

Total stroke	
50	50 mm
75	75 mm
100	100 mm
125	125 mm
150	150 mm
200	200 mm

Working stroke	
5	5 mm
10	10 mm
15	15 mm
20	20 mm

Piston rod end	
	hole
Z	male thread

Theoretic force [N]

Type			1T	3T	5T	8T	10T
Operating pressure [MPa]	0.3	A	7 216	18 473	30 054	46 959	67 630
		B	377	778	919	1 508	2 527
	0.4	A	9 621	24 630	40 072	62 612	90 174
		B	503	1 037	1 225	2 011	3 369
	0.5	A	12 026	30 788	50 090	78 265	112 717
		B	628	1 296	1 532	2 513	4 212
	0.6	A	14 432	36 945	60 108	93 918	135 261
		B	754	1 555	1 838	3 016	5 054
	0.7	A	16 837	43 103	70 126	109 571	157 804
		B	880	1 814	2 144	3 519	5 896
	0.8	A	19 242	49 260	80 143	125 224	180 347
		B	1 005	2 073	2 450	4 021	6 739

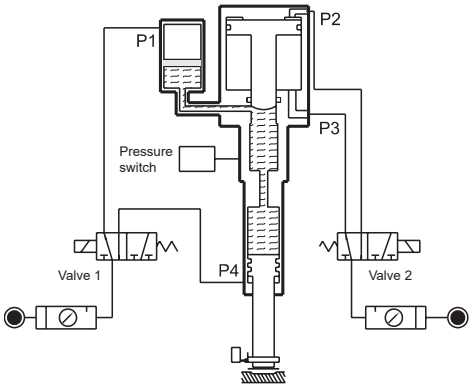

When the air is charged from the port P1, the oil in the tank will forward the hydraulic cylinder quickly. The pressure is the same as the air pressure, but the inflow of oil is large in volume.
When the air is charged from the port P2, a ram will advance. the highly pressured fluid will come in to the hydraulic cylinder which will be forwarded by large thrust. When the air is send into port P4 and P3. the hydraulic cylinder is swiftly reversed. and at the same time the ram goes back.

Working strokes [mm]

Type	Total stroke [mm]	1T	3T	5T	8T	10T
MHPD	50	5,10,15	5,10	5,10	5,10	5,10,15
	75	5,10,15,20	5,10,15	5,10,15	5,10,15	5,10,15
	100	5,10,15,20	5,10,15	5,10,15	5,10,15	5,10,15,20
	125	5,10,15,20	10,15	5,10,15	10,15	10,15,20
	150	10,15,20	10,15,20	10,15,20	10,15,20	10,15,20
	200	10,15,20	10,15,20	10,15,20	10,15,20	10,15,20

Type	Total stroke [mm]	1T	3T	5T	8T	10T
MHPD ... Z	50	5,10,15,20	5,10	5,10,15	5,10,15	5,10,15
	75	5,10,15,20	5,10,15	5,10,15	5,10,15	5,10,15,20
	100	5,10,15,20	5,10,15,20	5,10,15	5,10,15,20	5,10,15,20
	125	5,10,15,20	10,15,20	5,10,15,20	10,15,20	10,15,20
	150	10,15,20	10,15,20	10,15,20	10,15,20	10,15,20
	200	10,15,20	10,15,20	10,15,20	10,15,20	10,15,20

Boosters series MHB are used for generating of high pressure of hydraulic oil by air with common pressure. They are designed to save energy, time, space and money in wide variety of applications. These abilities and benefits of power cylinders make them ideal component in many applications, you can use them for such operation as marking, forming, punching riveting, shearing, stearing, straightening, and so on.

For more information, please visit our web page on www.sappv.cz/r/w13e

Working pressure	0,2 to 0,7 MPa
Temp. range	+5°C to +60°C
Working medium	modified compressed air
Installation	horizontal

2

Type	078	110	250
Intensified pressure ratio	7.8	11	25
Max. oil pressure at air pressure 0.7 MPa [MPa]	5.3	7.6	17.2
Max. discharged oil volume at high pressure [ml]	50	120	120
Recommended oil	hydraulic petroleum oil ISO 68		

Order codes

P MHBD 110

Booster	
MHBS	single pressure
MHBD	double pressure

Type	
078	ratio 7,8x
110	ratio 11x
250	ratio 25x

Operating principle
of double pressure booster MHBD

This type of booster is used for applications, where the auxiliary stroke with low force and working short stroke with big force is needed. Working stroke then conform to the oil volume, which is discharged by booster. Auxiliary stroke depends on volume of external air-hydro converter (which isn't in the supply).

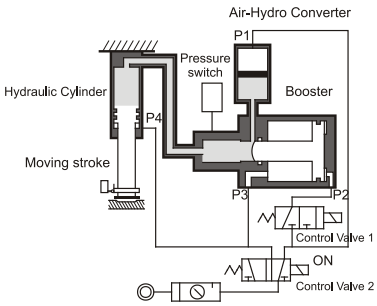

Quick traverse
When the air is charged from the port P1, the oil in the tank will forward the hydraulic cylinder quickly. The pressure is the same as the air pressure, but the inflow of oil is large in volume.

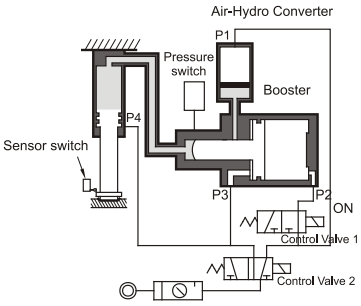

Intensified feeding
When the air is charged from the port P2, a ram will advance. the highly pressured fluid will come in to the hydraulic cylinder which will be forwarded by large thrust.

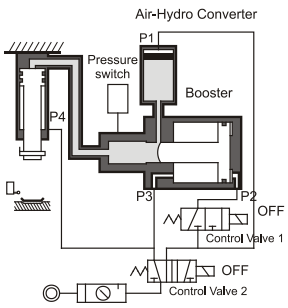

Swift release
When the air is send into port P4 and P3. the hydraulic cylinder is swiftly reversed. and at the same time the ram goes back.

Operating principle
of single pressure booster MHBS

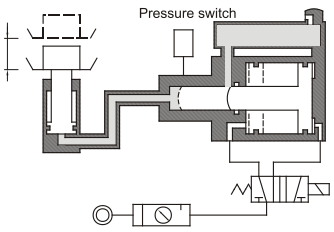

Booster can be used for short stroke hydraulic cylinders, for which is volume discharged by booster sufficient. In this case, any 5/2 valve can be used for control of booster and hydraulic cylinder, which copy the movement of booster.

Notice

- booster must be levelled
- booster must be placed higher than hydraulic cylinder
- frequency of use should be 6 times/min or lower

PRESSURE BOOSTER SERIES MVBA

Pneumatic pressure boosters series MVBA are used for increasing of air pressure. These booster regulators are able to twice increase inlet pressure, but due to safety, the maximal output pressure is up to 1,6 MPa. Boosters can be used in applications, where there is no sufficient pressure in regular distribution. The advantage is, that no additional power is required, so also heat generation is reduced. They are fully autonomous and they start to „produce“ high pressure air, when compressed air is brought to inlet port. **For more information, please visit our web page on www.sappv.cz/r/w14e**

Working (supply) pressure	0,1 to 1,0 MPa
Temperature range	+2°C to +50°C
Working medium	modified compressed air
Installation	horizontal

Type	MVBA2100	MVBA4100	MVBA4300
Connection	G3/8“	G1/2“	
Pressure increase rate	max. 2	max. 2	
Supply pressure [MPa]	0,1 to 1,0	0,1 to 1,0	
Operating (output) pressure [MPa]	0,2 to 1,0	0,2 to 1,0	0,2 to 1,6
Flow capacity [Nl] at supply pressure 0,5 MPa and output pressure 0,8 MPa	1000	1600	
Weight [kg]	3,9	9,4	9,5

Order codes

P MVBA 2100

Booster	
MVBA	pneumatic

Type	
2100	G3/8“, max. 1 MPa
4100	G1/2“, max. 1 MPa
4300	G1/2“, max. 1,6 MPa

Operation notes

- If the outlet capacity is undersized, pulsation may occur.
- Make sure to install a mist separator at the inlet side of the booster regulator, supply air must be dry - non lubricated
- The booster regulator has a sliding part inside, and it generates dust. Also, install a cleaning device such as an air filter or a mist separator on the outlet side as necessary.
- Depending on the necessity, install a silencer on the exhaust port of the booster regulator to reduce the exhaustion sound.
- Provide a dedicated pipe to release the exhaust air from each booster regulator. If exhaust air is converged into a pipe, the back pressure that is created could cause improper operation.

Dimensions

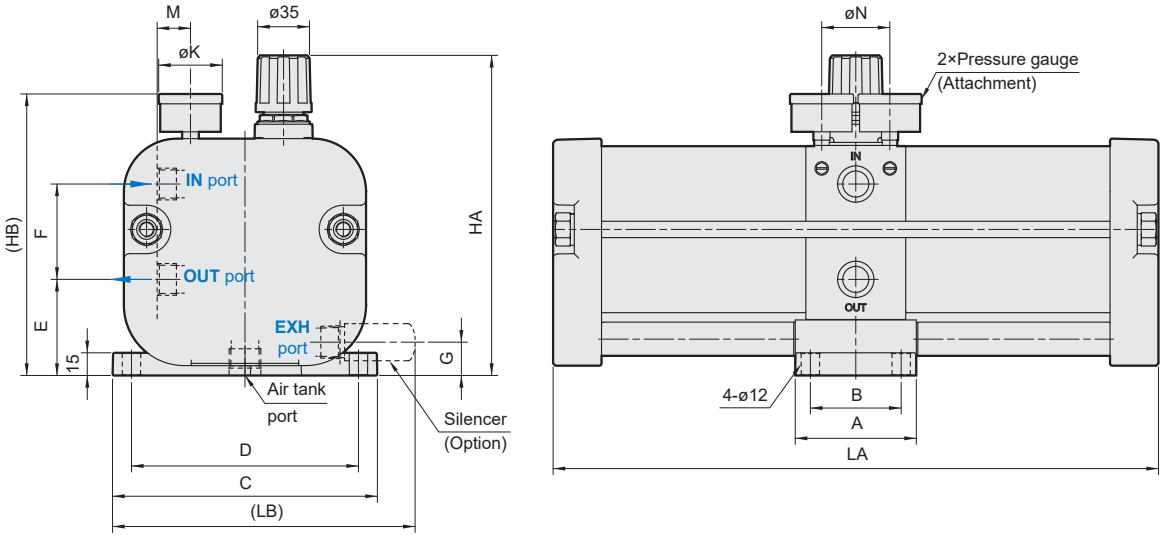

Typ	A	B	C	D	E	F	G	HA	HB	ΛA	ΛB	K	M	N
2100	73	53	118	98	46	43	18	172,5	140	295	168	24	8	30
4100	80	60	175	150	63,5	63	22	211,5	186	400	200	42	22	45
4300	80	60	175	150	63,5	63	22	221,8	186	400	200	42	22	45

Další technické parametry jsou k dispozici na našich internetových stránkách.

Pressure boosters (pressure amplifiers) are used to increase the pressure delivered by a compressor at the expense of proportional flow loss. They do not replace the compressor, but provide a higher pressure for a limited time. They are usually used to increase the force of pneumatic cylinders while maintaining smaller overall dimensions and weight, for high-pressure blowing, component testing, pressure testing, etc.

Working (supply) pressure	0,3 to 1,0 MPa
Temperature range	-20°C to +50°C
Working medium	modified compressed air
Installation	horizontal

Piston diameter [mm]	63	100
Connection	inlet G3/8“, others G1/8“ (G3/8“)	inlet G1/2“, others G1/8“ (G1/2“)
Pressure increase rate	2 or 3	2 or 3
Supply pressure [MPa]	0,3 to 1,0	0,3 to 1,0
Operating (output) pressure [MPa]	0,4 to 1,8 (2,8)	0,4 to 1,8 (2,8)
Flow capacity [Nl] at supply pressure 0,5 MPa and output pressure 0,8 MPa	200	250
Weight for output pressure 2,0 MPa[kg] / foot mounting	2,8 / 0,443	9,7 / 0,443

Order codes

P BS001 063 12

Piston diameter	
063	63 mm
100	100 mm

Output pressure	
12	2,0 MPa
13	3,0 MPa

Operation notes

Connection to the compressed air network and functions

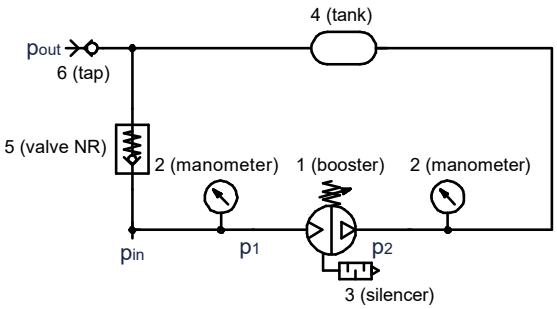

In case of direct connection of the booster to the system, a 3/2 valve (6) should be used to open and close the circuit at the output of the multiplier. An air filter should also be included at the output, as the booster contains moving parts. A filter should be included at the input to separate water and mist from the air, the air must not be lubricated. The booster provides high-pressure air in a “pulsating” manner, therefore it is recommended to use an air tank (4) at the output of the booster to avoid pulsation during use. To speed up the initiation/filling of the system, it is recommended to connect a one-way check valve, as shown in figure (5). The selection of a pressure booster does not only include the compression ratio, but above all a sufficient volume of the air tank to ensure the correct supply of the consumers. First, it is necessary to calculate the volume of air taken by the consumers (cylinders, blowing nozzles, etc.), and then determine the corresponding volume of the air tank. Silencers must be installed on the operating exhausts (not included). The booster is activated automatically as soon as the inlet pressure (p1) is applied and operates until the outlet pressure (p2) reaches twice the inlet pressure (at a compression ratio of 1:2) or three times (at a ratio of 1:3). The booster is not designed for free exhaust operation, but always requires a connected application. The outlet pressure can be regulated using a pressure regulator if necessary. If no air is being extracted at the outlet, the integrated check valves allow the increased pressure to be maintained even if the inlet pressure is removed.

Dimensions

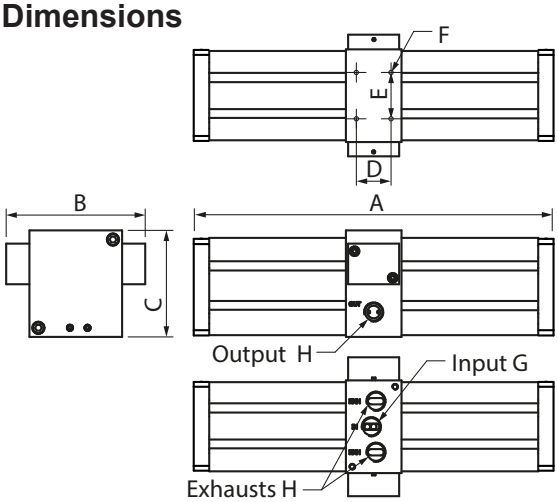

∅	Output pressure	A	B	C	D	E	F	G	H
63	2,0 MPa	284	120	92	30	40	M4	G3/8“	G1/8“
63	3,0 MPa	470	149	109	50	70	M8	G1/2“	G1/8“
100	2,0 MPa	259	120	92	30	40	M4	G3/8“	G3/8“
100	3,0 MPa	451	149	109	50	70	M8	G1/2“	G1/2“

Accessories

Description	Order code
Foot mounting, for ø63 (1 piece)	PBSCP 063
Foot mounting, for ø100 (1 piece)	PBSCP 100
Pressure regulator G1/2“ 0,05-2,5 MPa incl. gauge	2913 0000 1000 0012
Pressure regulator G3/8“ 0,2-3,5 MPa incl. gauge	2913 0000 0800 0003

Technical data

Piston diameter 63 mm - output pressure 2,0 MPa

Charging characteristics

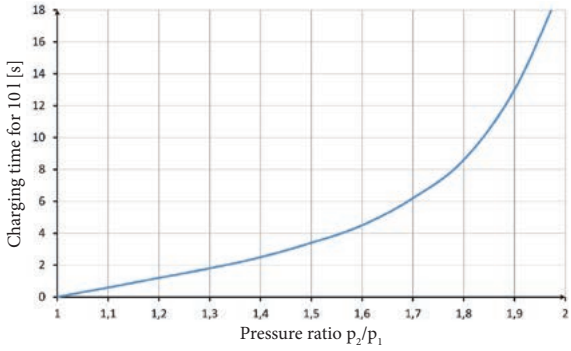

Flow characteristics for inlet pressure p_1 [MPa]

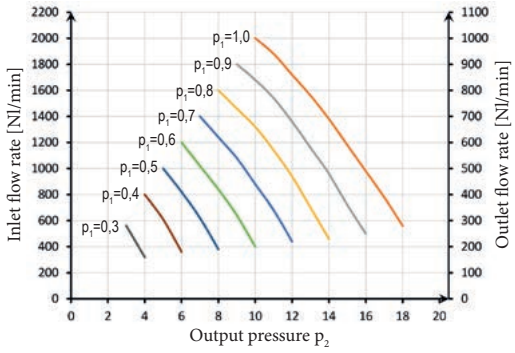

Piston diameter 63 mm - output pressure 3,0 MPa

Charging characteristics

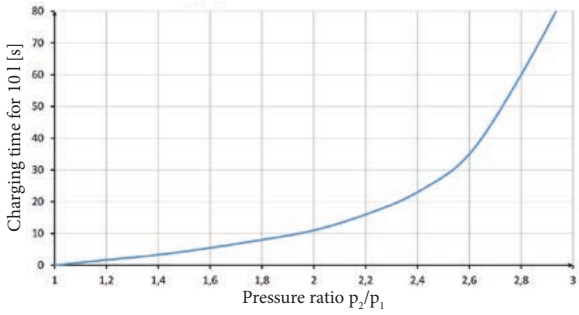

Flow characteristics for inlet pressure p_1 [MPa]

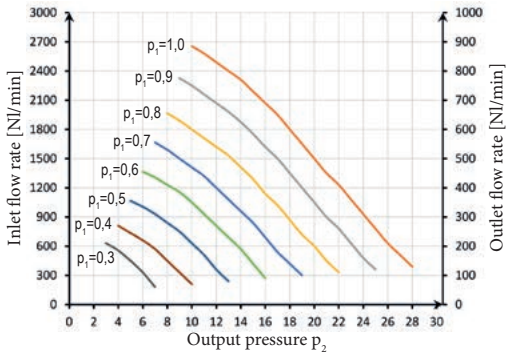

Piston diameter 100 mm - output pressure 2,0 MPa

Charging characteristics

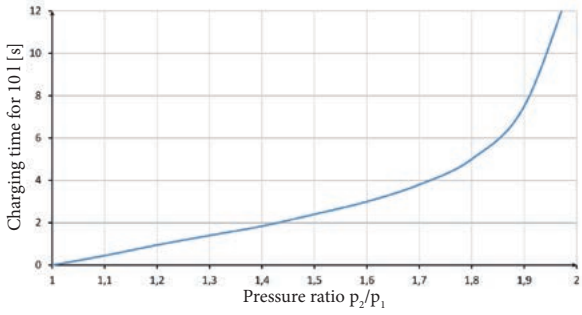

Flow characteristics for inlet pressure p_1 [MPa]

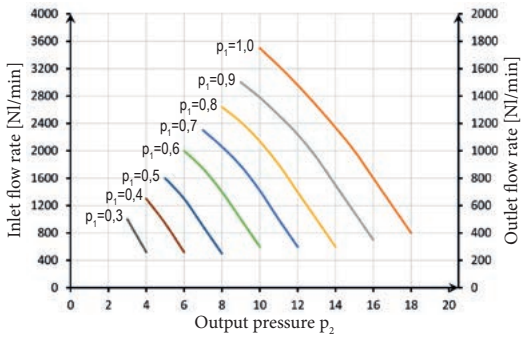

Piston diameter 100 mm - output pressure 3,0 MPa

Charging characteristics

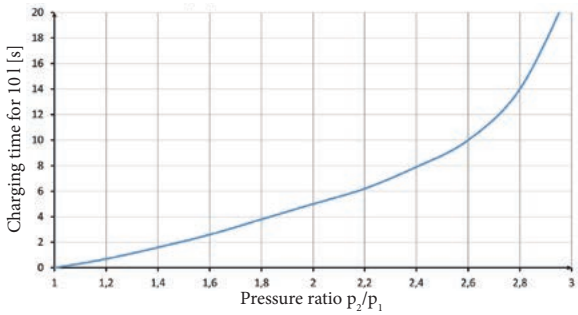

Flow characteristics for inlet pressure p_1 [MPa]

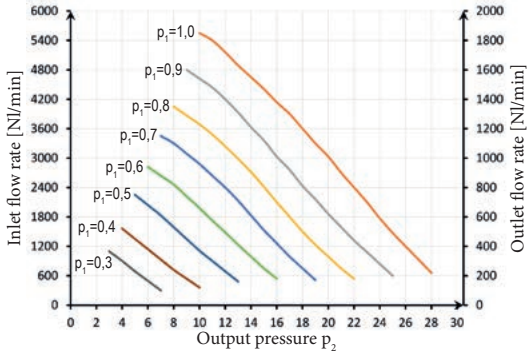

Calculation of the filling time of the tank

Example of calculating the filling time of a tank with a volume of 50 liters when increasing the pressure from the starting pressure of 0,7 MPa to the final pressure of 0,9 MPa using the pressure amplifier PBS00106312 with an input pressure of 5 bar. Values for the calculation: input pressure: P1 = 0,5 MPa, initial pressure in the tank: STP = 0,7 MPa, final pressure in the tank: FTP = 0,9 MPa, tank volume: V = 50 l. We calculate the ratio STP/P1 and FTP/P1, i.e. 0,7/0,5=1,4 and 0,9/0,5=1,8. From the graph, we determine the time values corresponding to the specified pressure ratios, i.e. for P2/P1=1,4 it is a value of approximately 2,5 s, for a ratio of 1.8 it is a value of 8,5 s. We subtract the values, i.e. 8,5-2,5=6 s. The pressurization time of 10 l to a pressure of 0,9 MPa under the specified conditions is 6 s. Pressurization of 50 l will therefore be a multiple of 6 x 5=30 s.

PROXIMITY SWITCHES - CONTENTS

Series KT-21, KT-50 3-2

Series RZT7 and MZT8 3-4

Proportional position sensor series MPS with analog output 3-6

Series SP-472 for high temperature 3-7

Series RCE, RPE and RNE 3-8

Technical information 3-9

Limit switches for pneumatic swing actuators series ATM 3-10

PROXIMITY SWITCHES SERIES KT-21 AND KT-50

STRÁNSKÝ A PETRŽÍK

KT-xxP series of electronic (PNP) proximity switches eliminates negative features of reed relays. Those switches are fully electronic, which brings excellent properties, long lifetime and integrated protections. We also offer reed switches, series KT-xxR. Series KT switches can be used with all types of Stránský a Petržík's cylinders. For various types of cylinders the right bracket must be used.
Switches KT-50 can be used with cylinders with T-slot made by other producer.

Technical data

Description	Value / Switch type			
	KT-21P	KT-21R	KT-50P	KT-50R
Supply voltage U_b [V]	5 to 30 DC	5 to 240 DC / AC	10 to 30 DC	5 to 240 DC / AC
Max. switching power [W / VA]	6	10	3	10
Continuous current I_a [mA]	≤ 200	≤ 100	≤ 100	≤ 100
Power consumption [mA] at 24V on-state	20	—	20	—
Voltage drop U_d [V]	≤ 0.5	≤ 3.5	≤ 2	≤ 3
Leakage current [mA]	≤ 0.01	—	≤ 0.05	—
Enclosure rating	IEC529 IP67			
Temperature range T_a [°C]	-10 to +70			
Cable	PVC, 3x0.22 mm², ø4 mm	PVC, 2x0.22 mm², ø4 mm	PU, 3x0.22 mm², ø3 mm	PU, 2x0.22 mm², ø3 mm
Cable length	2 m or 0.15 m with M8x1 connector		2 m or 0.30 m with M8x1 connector	
Housing material	plastic, metal sheet		plastic, metal fixing device	
Integrated protection	against short circuit, overvoltage and reversing of polarity	—	against short circuit, overvoltage and reversing of polarity	—

Order codes

Type	Switching output	Max. switching frequency [Hz]	Function indicator	Order codes for switch with connection	
				cable 2 m	cable 0.15 (0.30) m with M8x1 connector
KT-21P	PNP	1000	LED	2202 5111 0210 2000	2202 5111 0215 0000
KT-21R	reed	200	LED	2201 5102 0110 2000	2201 5102 0115 0000
KT-50P	PNP	1000	LED	2202 5011 0110 2000	2202 5011 0115 0000
KT-50R	reed	200	LED	2201 5002 0110 2000	2201 5002 0115 0000

Please read carefully technical information on page 3-9.

How to fix switch on cylinder and which series for which cylinder type

Pneumatic cylinder type	Switch can be used					
	directly	with PM-x[1] bracket	with PI-x [2] bracket	with PBL-1 bracket (up to Ø63)	with PAB bracket (up to Ø100)	with bracket for dovetail groove
VDMA 24562, Ø32 to 100 mm			✓ KT-21			
VDMA 24562, Ø125 to 320 mm, CNOMO		✓ KT-21				
Compact, ISO 15552 (order code 10201...), short stroke Ø160 and 250 mm	✓ KT-50					
DIN ISO 6432					✓ KT-21	
Short stroke, Ø20 to 100 mm						✓ KT-50
PDSW, anti-corrosive - hygienic clean, rotary actuator, Ø 20 to 40 mm				✓ KT-50	✓ KT-21	
Rotary actuator, Ø50 and more mm		✓ KT-21				
With guide unit U or H [3]		✓ KT-21		✓ KT-50	✓ KT-21	

1) PM-6 bracket is for cylinders with tie rods diameter 5 to 6 mm (cylinders dia. 32, 40), PM-8 bracket is for tie rod diameter 8 mm (cylinders dia. 50, 63, 160 to 320), PM-12 bracket is for tie rod diameter 12 mm (cylinders dia. 80 to 125 mm)
2) PI-1 bracket is for cylinders dia. 32 and 40 mm, PI-2 is for cyl. dia 50 and 63 mm, PI-3 is for cyl. dia 80 mm and PI-4 is for cyl. dia 100 mm
3) We recommend to use bracket for tube with cylinder with guide unit, to provide sensing in section, where the guide unit is mounted. The guide body inhibits using of bracket for tie rod / profile. On the other side, or in the area out of guide body, bracket for tie rod / profile can be used.

Dimensions of series KT-21

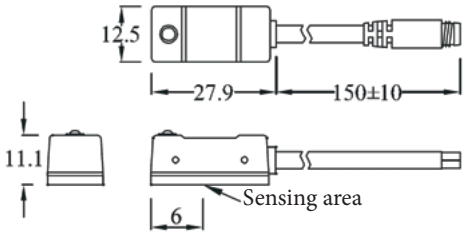

Dimensions of series KT-50

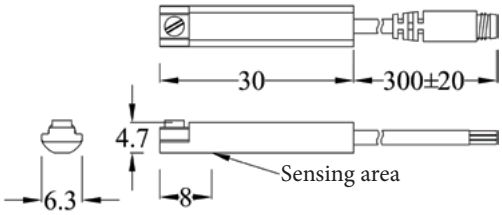

Connection of KT-xxP

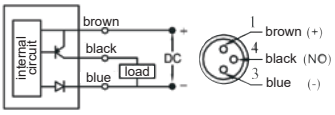

Connection of KT-xxR

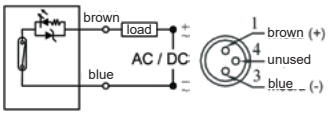

Brackets for switches series KT-21

Bracket PM-x for cylinder tie rods

Type	Order codes	For cylinder	Tie rod
PM-6	2290 5119 0000 0000	Ø32, 40	Ø5 to 6
PM-8	2290 5120 0000 0000	Ø50, 63, 160 to 320	Ø8
PM-12	2290 5121 0000 0000	Ø80 to 125	Ø12

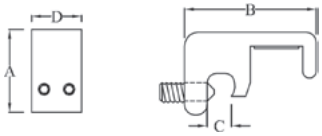

Type	A	B	C	D
PM-6	19	31.0	6.5	12
PM-8	20	34.5	8	12
PM-12	20	35.5	11.5	12

Bracket PI-x for profile tube

Type	Order codes	For cylinder
PI-1	2290 5115 0000 0000	Ø32, 40
PI-2	2290 5116 0000 0000	Ø50, 63
PI-3	2290 5117 0000 0000	Ø80
PI-4	2290 5118 0000 0000	Ø100

It is necessary to use PM-12 bracket for cylinder to VDMA 24562 dia. 125 mm, and bracket PM-8 for cylinders dia. 160 to 320 mm

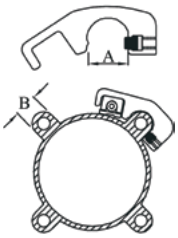

Type	A max	B max
PI-1	11.15	10.4
PI-2	14.10	13.5
PI-3	15.45	15
PI-4	16.3	16

Bracket PAB for tube

Type	Order codes	For cylinder
PAB	2290 5114 0000 0000	up to Ø100

We recommend to use bracket for tube with cylinder with guide unit, to provide sensing in section, where the guide unit is mounted. The guide body inhibits using of bracket for tie rod / profile. On the other side, or in the area out of guide body, bracket for tie rod / profile can be used.

How to use PAB bracket:

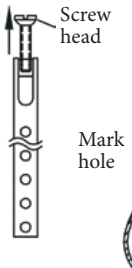

Step 1:
Start by keeping screw 3 to 4 turns into barrel nut on the end of band assembly

Step 2:
Place the screw head into clamp slot and wrap the band around the cylinder, position the pin with the nearest hole on the band and mark the hole with permanent marker

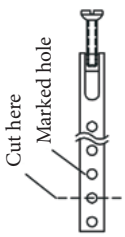

Step 3:
Remove clamp assembly from the cylinder. Locate the marked hole and cut the band at midway between next two adjacent holes

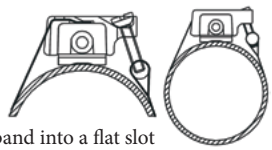

Step 4:
Insert cut of the band into a flat slot opposite from the clamp slot. Place the chosen hole over the pin and bend the band firmly down with thumb pressure. Then wrap the band around the cylinder barrel and re-insert screw head into clamp. Position the switch and tighten.

Brackets for switches series KT-50

Bracket for dovetail groove

Order codes	For cylinder
2290 2011 0000 0000	Ø20 to 100

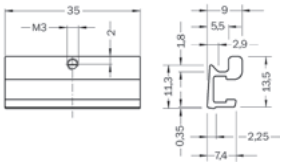

Bracket PBL-1 for tube

Type	Order codes	For cylinder
PBL-1	2290 5014 0000 0000	Ø10 to 63

Cables with M8x1 connector

Description	Order codes - straight connector	Order codes - elbow connector
Connector only for cable max. 3x0.25 mm², max. dia. 5.5 mm	2291 0001 0000 0000	2291 0002 0000 0000
PVC cable with connector 3x0.22 mm², length 2m	2291 0010 0000 0000	2291 0015 0000 0000
PVC cable with connector 3x0.22 mm², length 5m	2291 0011 0000 0000	2291 0016 0000 0000
PVC cable with connector 3x0.22 mm², length 10m	2291 0012 0000 0000	2291 0017 0000 0000

These proximity switches are produced as reed switches or electronic switches. Advantage of these switches is that they can be used with all types of Stránský a Petržík's cylinders. It means, that there can be used not only several diameters but also more types of cylinders (VDMA, compact, DIN ISO, etc.) in pneumatic circuit and for all cylinders only one type of switch can be used (it is necessary to select proper bracket for various types of cylinder - see table bellow). It brings cost savings at designing electrical circuits, at connection as well as at circuit maintaining.
Switch can be used with cylinders with T-slot made by other producers.

Technical data of series RZT7

Description	Value
Supply voltage U_b [V]	5 to 30 DC / AC
Max. switching power [W]	≤ 6
Continuous current I_a [mA]	≤ 500 (DC), ≤ 300 (AC)
Overrun distance, typ. [mm]	10
Enclosure rating to EN 60 529	IP 67
Temperature range T_a [˚C]	-20 to +70
Housing material	plastic
Cable	PVC, 3 x 0.12 mm²
Function indicator	LED
Integrated short circuit (max. 8A) and reverse polarity protection	

Technical data of series MZT8

Description	Value for switching output	
	PNP and NPN	NAMUR EN 60947-5
Supply voltage U_b [V]	10 to 30 DC	8,2 to 20 DC[1)]
Voltage drop U_d [V]	≤ 2.2	
Power consumption [mA]	≤ 10	
Continuous current I_a [mA]	≤ 200	≤ 60
Overrun distance, typ. [mm]	3	
Enclosure rating to EN 60 529	IP 68	IP 67
Temperature range T_a [˚C]	-30 to +80	-25 to +80
Housing material	plastic PA12	
Cable	PUR, 3 x 0.14 mm²	PVC, 2 x 0.14 mm²
Function indicator	LED	
Integrated short circuit, reverse polarity and power-up pulse protection		

Order codes

Type	Switching output	Function	Max. switching frequency [Hz]	Sensitivity [mT]	Order codes for switch with connection		
					cable 2m	cable 5m	cable 0.3 m with connector M8x1
RZT7	reed	normally open (NO)	400	3	2201 2810 0510 2000	2201 2810 0510 5000	2201 2810 0515 0000
MZT8	PNP		1000	2.6	2202 2511 0210 2000	2202 2511 0210 5000	2202 2511 0215 0000
MZT8	NPN		1000	2.6	—	—	2202 2611 0215 0000
MZT8	NAMUR ATEX[1)]		1000	2.8	2202 2714 5610 2000	2202 2714 5610 5000	—

1) According NAMUR EN 60947-5-6. Using of isolated switch amplifier with certificates of conformity for explosion areas is recommended (U ≤ 20 V; I≤ 60 mA; P ≤ 100 mW), device labeling: II 1D Ex ia IIIC T135 ˚C Da, II 1G Ex ia IIC T4 Ga

Please read carefully technical information on page 3-9.

How to fix switch on cylinder and which series for which cylinder type

Pneumatic cylinder type	Switch can be used					
	directly	with bracket	with bracket for dovetail groove	With bracket for tube		
				up to Ø25	up to Ø63	up to Ø125
VDMA 24562, CNOMO		✓				
Compact, ISO 15552 (order code 10201...), short stroke Ø160 and 250 mm	✓					
DIN ISO 6432, PDSW, anti-corrosive - hygienic clean				✓		
Short stroke, Ø20 to 100 mm			✓			
Rotary actuator, Ø 20 to 40 mm				✓	✓	
Rotary actuator, Ø50 and more mm		✓				
With guide unit U or H*		✓		✓	✓	✓

*) We recommend to use bracket for tube with cylinder with guide unit, to provide sensing in section, where the guide unit is mounted. The guide body inhibits using of bracket for tie rod / profile. On the other side, or in the area out of guide body, bracket for tie rod / profile can be used.

Dimensions of series RZT7

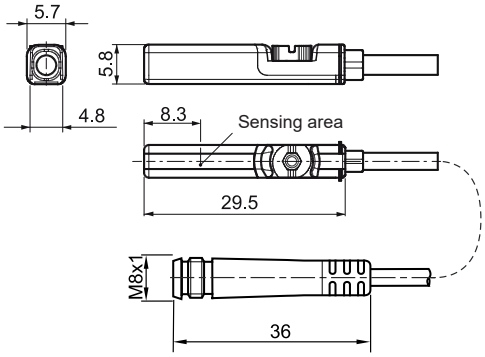

Dimensions of series MZT8

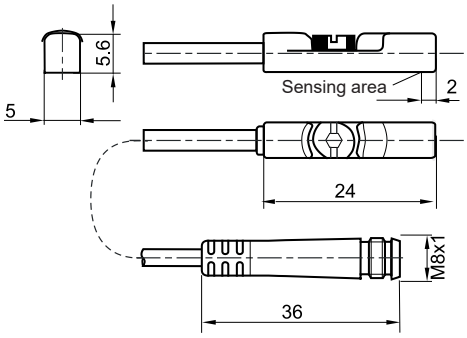

Connection

reed, PNP, NPN

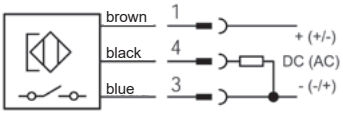

NAMUR

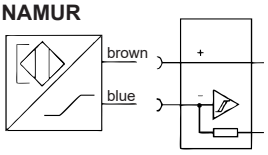

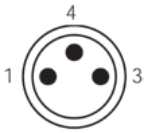

Wire colour	Pin	Assignment
brown	1	+V DC
black	4	NO
blue	3	-V DC

3

Brackets for switches series RZT7, MZT8

Bracket for tie rod / profile

Order code	Ø tie rod / profile
2290 2010 0000 0000	5 to 18

suitable for cylinders with tie rods or profile tubes cylinders to ISO 6431, VDMA 24562 (except guide unit U or H) and CNOMO, tie rod diameter / profile width: 5 to 18 mm

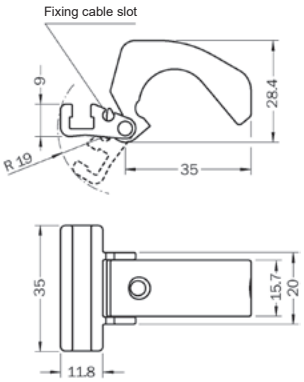

Bracket for dovetail groove

Order code	Profile
2290 2011 0000 0000	dovetail gr.

suitable for short stroke cylinders with dovetail groove

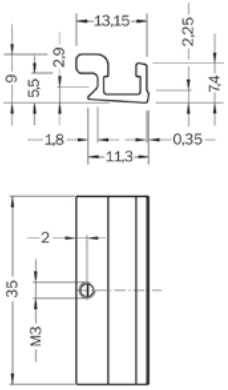

Bracket for round tube

Order code	For cylinder
2290 2012 0000 0000	up to Ø25
2290 2013 0000 0000	up to Ø63
2290 2014 0000 0000	up to Ø125

up to Ø25: suitable for cylinders with round tube (ISO 6432 and rotary actuators dia. 20-32) and cylinders to VDMA 24562 with guide unit U or H diameter 32

up to Ø63: suitable for cylinders with round tube (rotary actuator dia. 40) and cylinder to VDMA 24562 with guide unit U or H dia. 40 to 63

up to Ø125: suitable for cylinders with round tube and cylinders to VDMA 24562 with guide unit U or H dia. 80 to 125

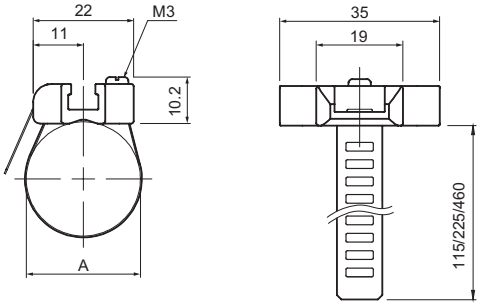

Cables with M8x1 connector

Description	Order codes - straight connector	Order codes - elbow connector
Connector only for cable max. 3x0.25 mm², max. dia. 5.5 mm	2291 0001 0000 0000	2291 0002 0000 0000
PVC cable with connector 3x0.22 mm², length 2m	2291 0010 0000 0000	2291 0015 0000 0000
PVC cable with connector 3x0.22 mm², length 5m	2291 0011 0000 0000	2291 0016 0000 0000
PVC cable with connector 3x0.22 mm², length 10m	2291 0012 0000 0000	2291 0017 0000 0000

PROPORTIONAL POSITION SENSOR SERIES MPS WITH ANALOG OUTPUT

STRÁNSKÝ A PETRŽÍK

Proportional position sensor with analog output (current as well as voltage) is suitable for application, where it is necessary to know exact position of the piston. It is a compact sensor, which can be fixed into the T slot. It is a fully electronic sensor, which brings excellent properties, long lifetime and integrated protections. There are several types with various measuring ranges available for various cylinder strokes. If the cylinder stroke is smaller than measuring range, the starting and end position can be adjusted by user on the sensor.

Technical data

Description	Value
Supply voltage U_b [V]	10 to 30 DC, ±10%
Continuous current I_a [mA]	25
Max. load resistance, current output [Ω]	500
Min. load resistance, voltage output [kΩ]	2
Temperature range T_a [˚C]	-20 to+70
Connection	PUR cable 2m or cable 0.3 m with M8x1 connector
Function indicator	LED
Overload and short-circuit protection, reverse polarity protection	

Description	Value
Sample time [ms]	1
Resolution typ. [mm]	0.05
Linearity typ. [mm]	0.3
Repeat accuracy typ. [mm]	0.1
Travel speed max. [m/s]	3
Analog output - current [mA]	4 to 20
- voltage [V]	0 to 10
Enclosure rating	IP 67
EMC	according to EN 60947-5-7
Housing material	PA reinforced

Order codes, dimensions

Type	Measuring range L1 [mm]	L2	Order codes for switch with connection	
			cable 2m	cable 0.3 m with M8x1 connector
MPS	32	45	2210 9011 0010 2032	2210 9011 0015 0032
	64	77	2210 9011 0010 2064	2210 9011 0015 0064
	96	109	2210 9011 0010 2096	2210 9011 0015 0096
	128	141	2210 9011 0010 2128	2210 9011 0015 0128
	160	173	2210 9011 0010 2160	2210 9011 0015 0160
	192	205	2210 9011 0010 2192	2210 9011 0015 0192
	224	237	2210 9011 0010 2224	2210 9011 0015 0224
	256	269	2210 9011 0010 2256	2210 9011 0015 0256

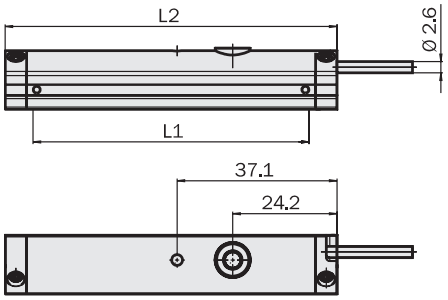

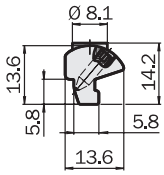

Connection

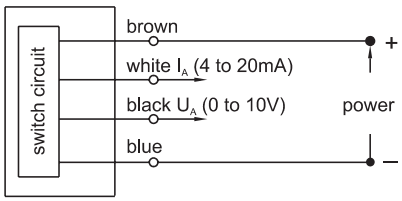

How to fix switch on cylinder

Pneumatic cylinder type	Switch can be used
	directly
Compact, ISO 15552 (order code 10201...), short stroke Ø160 and 250 mm	✓

Cables with straight M8x1 connector

Description	Order codes
PVC cable with connector 4x0.22 mm², length 2m	2291 0020 0000 0000
PVC cable with connector 4x0.22 mm², length 5m	2291 0021 0000 0000
PVC cable with connector 4x0.22 mm², length 10m	2291 0022 0000 0000

PROXIMITY SWITCHES SERIES SP472

This proximity switch is designed for use in extreme temperature conditions. It can be placed and used in ambient temperatures from -40 to +150°C. This switch is suitable for use with cylinders to VDMA 24562 and DIN ISO 6431 when proper bracket is used. Switch is mounted to bracket with M3 screws (included in pack).

Technical data

Description	Value
Supply voltage U_b [V]	10 to 30 DC
Power consumption [mA]	20
Continuous current I_a [mA]	100
Enclosure rating to EN 60 529	IP 68
Temperature range T_a [˚C]	-40 to +150
Housing material	dural
Cable	silicone, 3 x 0.22 mm², length 2 m
Function indicator	none
Built-in reverse polarity protection, shock and vibration resistivity, switch hasn't built-in short circuit protection	

Order codes

Type	Switching output	Max. switching frequency [Hz]	Sensitivity [mm]	Connection	Order codes
SP-472	PNP	10000	5 to 10	cable 2 m	2202 8012 5200 2000

Bracket for pneumatic cylinders	Bracket type	Order codes
VDMA 24562, piston diameter 32, 40, 125 to 320 mm	1	2290 8010 0000 0000
VDMA 24562, piston diameter 50 and 63 mm (with profile tube)	2	2290 8010 0050 0063
VDMA 24562, piston diameter 80 and 100 mm (with profile tube)	3	2290 8010 0080 0100
Short stroke (piston diameter 20 to 80 mm)	4	2290 8011 0000 0001
Short stroke (piston diameter 100 mm)	4	2290 8011 0000 0002

Dimensions

Switch

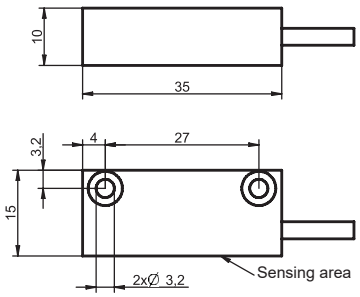

Bracket

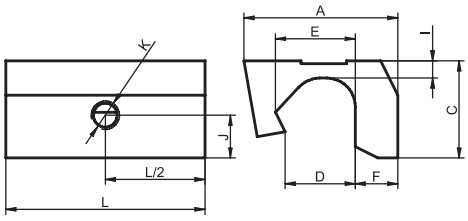

Type	A	C	D	E	F	I	J	K	L
1	27	17	12,3	14	7,5	3	7	M6	35
2	27	19	13	–	5	5	5	M5	35
3	27	25	16	–	5	6	5	M5	35

Please read carefully technical information on page 3-9.

Connection

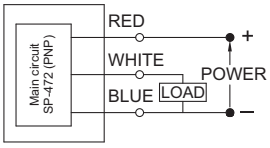

How to fix switch on cylinder and which series for which cylinder type

Pneumatic cylinder type	Switch can be used with bracket			
	type 1	type 2	type 3	type 4
VDMA 24562, piston diameter 32, 40, 125 to 320 mm	✓			
VDMA 24562, piston diameter 50 and 63 mm		✓		
VDMA 24562, piston diameter 80 and 100 mm			✓	
Rotary actuator, piston diameter 50 and more mm	✓			
Short stroke (piston diameter 20 to 100 mm)				✓

PROXIMITY SWITCHES
SERIES RCE, RPE AND RNE

STRÁNSKÝ A PETRŽÍK

RPE and RNE series of electronic (PNP and NPN) proximity switches eliminates negative features of reed relays. Those switches are fully electronic, which brings excellent properties and long lifetime. We also offer reed switches, series RCE. All series switches can be used with cylinders series M*.

Technical data

Description	Value / Switch type		
	RCE (reed switch)	RPE (solid state switch, PNP)	RNE (solid state switch, NPN)
Supply voltage U_b [V]	5 to 230 DC or AC	5 to 30 DC	5 to 30 DC
Max. switching power [W / VA]	10	1.5	1.5
Continuous current I_a [mA]	≤ 100	≤ 50	≤ 50
Power consumption [mA] at 24V on-state	—	≤ 12	≤ 10
Voltage drop U_d [V]	≤ 2.5	≤ 1.5	≤ 0.5
Leakage current [mA]	—	≤ 0.01	≤ 0.01
Enclosure rating	IEC 529 IP67		
Temperature range T_a [°C]	-10 to +70		
Cable	2 wires, ø2.8 mm	3 wires, ø3 mm	3 wires, ø3 mm
Cable length	2 m or 0.15 m with M8x1 connector		
Housing material	plastic		
Integrated protection	—	power source reverse polarity, surge suppression	

3

Order codes

Type	Switching output	Max. response time [Hz]	Function indicator	Order codes for switch with connection	
				cable 2 m	cable 0.15 m with M8x1 connector
RCE	reed	1	red LED	PRCE	PRCE-QD
RPE	PNP	1	red LED	PRPE	PRPE-QD
RNE	NPN	1	green LED	PRNE	PRNE-QD

Please read carefully technical information on page 3-9.

Dimensions and connection of RCE type

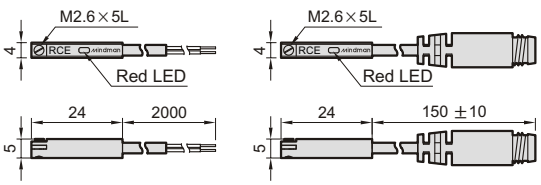

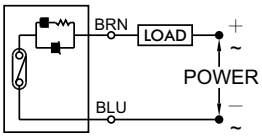

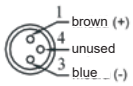

Dimensions of RPE and RNE type

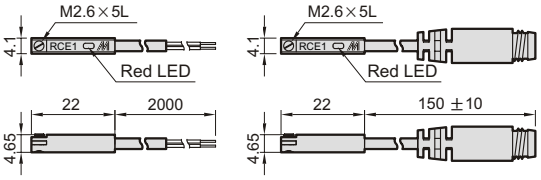

Connection of RPE type

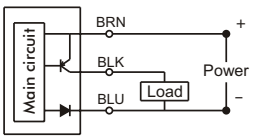

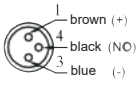

Connection of RNE type

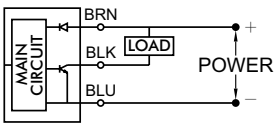

How to fix switch on cylinder and which series for which cylinder type

Pneumatic cylinder type	Sutable switch with direct mounting
MCGS, MCGD, MCDA, MCSS , MSBD[1)], MSBR[2)], MSBS[3)], MCHA, MCHB, MCRPMD	✓ RCE, ✓ RPE, ✓ RNE

1) Except piston diameter 50 mm - in this case please contact our technical dept.
2) Except piston diameter 20 mm - in this case please contact our technical dept.
3) Except piston diameter 20 and 50 mm - in this case please contact our technical dept.

Warning

Do not exceed specification, permanent damage to the sensor may occur.

Rules for using of proximity switches

1. For reed switch type sensors, polarity must also be observed for the proper functioning of LED. Connect the brown wire in series with load positive (+) and the blue wire to negative (-) of power source. If the polarity is reversed, reed switch remains functional but LED will remain in "OFF" state.

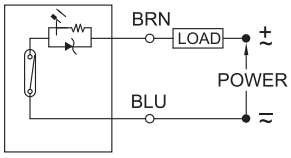

2. For solid-state type sensors , polarity must also be observed . Connect brown (red for SP-472 switch) wire to the positive (+) and the blue to the negative (-) of DC power source. The black (white for SP-472 switch) wire must connect to the load only. If the black (white for SP-472 switch) wire is accidentally connected to the power source, permanent damage to the sensor may occur.

(NPN Output)

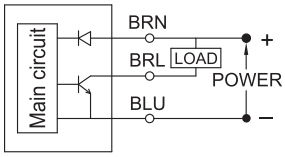

(PNP Output)

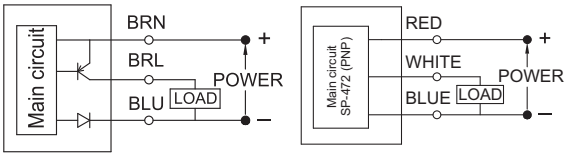

3. An external protection circuit may be required if the reed switch is used with inductive load. For DC voltage, the diode must be connected, for AC voltage, the RC circuit must be connected as shown below.

DC Power

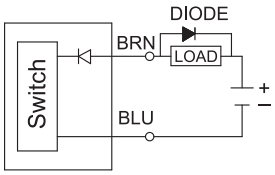

AC Power

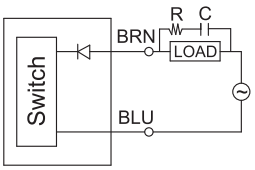

R: 2,7K Ω
C: 0,1μf/600V

4. Keep sensors away form stray magnetic field to prevent malfunctions.

5. When using reed switch with capacitive load or if the lead wire length exceed 10 meters, an inductor must be installed in series.

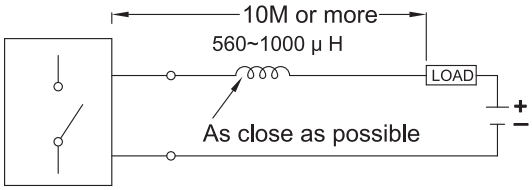

Position sensors of the ZLS series for actuators with swing movement of the ATM series have visible and clear optical position signaling. The sensor cam is easily and quickly adjusted without special tools. The terminal block has 8 contacts available for easy wiring. Thanks to the connection interface according to Namur VDI/VDE 3845, connecting the sensor is quick and easy.

3

Sensor type	mechanical	induction type
Switches	2x switch NC+NO (2xSPDT)	2x switch NC+NO (2xSPDT)
Switching capacity	250V AC, 16A; 125V AC, 16A 250V DC, 0,2A; 125V DC, 0,4A; 30V DC, 4A	12 to 24V DC
Protection class	IP65 / IP67	
Environmental conditions	altitude does not exceed 2000 m, ambient temperature -20 to -60 °C and + 60 °C according to temperature range	
Identificator	optical	
Limit switch connection	NAMUR VDI/VDE 3845, ISO 5211	
Electrical interface	G1/2“	

Order codes

ZG-ZLS 300 G A ST

Sensor type	
N	mechanical
G	induction type

Body material	
A	Aluminium alloy
S	stainless steel

Temperature range	
ST	-20°C to +60°C
OL	-40°C to +60°C
LT	-60°C to +60°C

Wiring

Mechanical sensor

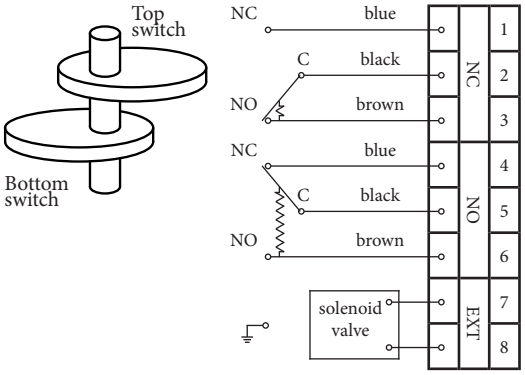

Induction sensor

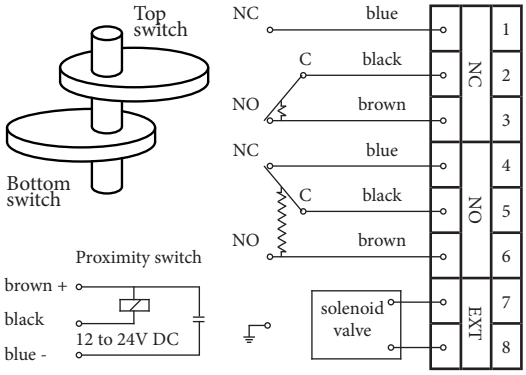

MOUNTING ACCESSORIES - CONTENTS

For piston rod - suitable for most cylinders

Piston rod clevis 4-2
Flanged piston rod coupling 4-2
Piston rod eye 4-3
Self-aligning piston rod coupling 4-3
Piston rod protection cover 4-4

For cylinders • ISO 15552, VDMA 24562, NF E 49003.1 • DIN ISO 6431, VDMA 24562, NF E 49003.1 • COMPACT

Flange mounting 4-5
Foot mounting 4-5
Foot mounting 4-6
for cylinders with double piston rod
Boxer flange mounting 4-6
Swivel flange 4-7
Clevis foot mounting 4-7
Swivel flange with spherical bearing 4-8
Swivel flange 4-8
Narrow swivel flange 4-9
Rectangular swivel flange 4-9
Trunnion mounting 4-10
Trunnion mounting 4-10
Pivot pin 4-11
Pivot pin 4-11
for cylinders with round tube
Pivot pin 4-12
for cylinders ISO 15552 (with square profile)
Pivot pin to front/end cap 4-12
Valve bracket 4-12
Guide unit H with ball bearings 4-13
Guide unit U with slide bearings 4-15

For cylinders • CNOMO 06.07.02

Piston rod clevis 4-17
Flange mounting 4-17
Foot mounting 4-18
Swivel flange 4-18
Swivel flange 4-19
Pivot pin 4-19

For cylinders • DIN ISO 6432

Flange mounting 4-20
Foot mounting 4-20
Clevis foot mounting 4-20
Guide unit H with ball bearings 4-21
Guide unit U with slide bearings 4-22

For cylinders • DIN ISO 6432 SERIES MCMIS STAINLESS STEEL

Piston rod clevis 4-23
Piston rod eye 4-23
Flange mounting 4-23
Foot mounting 4-24
Clevis foot mounting 4-24
Front/end cap nut 4-24

For cylinders • PDSW

Foot mounting 4-25
Clevis foot mounting 4-25
Plug bolt 4-25

For cylinders • ANTI-CORROSIVE - HYGIENIC CLEAN

Piston rod clevis 4-26
Piston rod eye 4-26
Foot mounting 4-26
Front/end cap nut 4-27
Swivel flange with spherical bearing 4-27
Narrow swivel flange 4-27
Swivel flange 4-28

For cylinders • SHORT STROKE

Flange mounting 4-29
Foot mounting 4-29

STRÁNSKÝ A PETRŽÍK

PISTON ROD CLEVIS

Supply contains:
1 pc clevis
1 pc pivot pin
2 pcs retaining rings

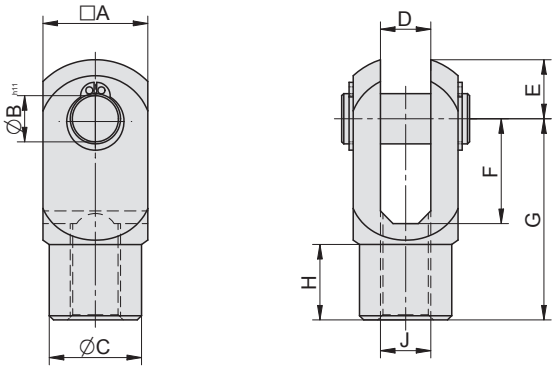

Piston Ø*	A	B	C	D	E	F	G	H	J*	Weight	Order codes
12 / 16	12	6	10	6	7.6	12	24	10	M6	0.005	2110 0100 0012 0000
20	16	8	14	8	10	16	32	14	M8	0.02	2110 0100 0020 0000
25 / 32	20	10	18	10	12.6	22	40	13	M10x1.25	0.06	2110 0100 0025 0000
40	25	12	22	12	14	25	48	18	M12x1.25	0.12	2101 0100 0040 0000
50 / 63	28	16	26	16	14	32	64	23	M16x1.5	0.16	2101 0100 0050 0000
80 / 100	35	20	34	20	18	45	80	23.5	M20x1.5	0.36	2101 0100 0080 0000
125	55	30	48	30	38	60	110	40	M27x2	1.56	2101 0100 0125 0000
160 / 200	70	35	60	35	57	85	144	45	M36x2	3.60	2101 0100 0160 0000
250	85	40	70	40	64	84	168	65	M42x2	6.32	2101 0100 0250 0000
320	96	50	80	50	73	96	192	70	M48x2	6.86	2101 0100 0320 0000

*) Please check dimensions of thread on cylinder and accessories for piston rod, before you order it (for example: compact cylinder piston dia. 40 mm has thread M10x1.25 on piston rod, piston rod clevis for cylinder dia. 40 has thread M12x1.25, so it is necessary to order picton rod clevis for cylinder dia. 25/32, where is thread M10x1.25).

Piston rod clevis for CNOMO cylinders can be found on page 4-17.

Piston rod clevis for anticorrosive - hygienic clean cylinders can be found on page 4-26.

FLANGED PISTON ROD COUPLING

Supply contains:
1 pc flange

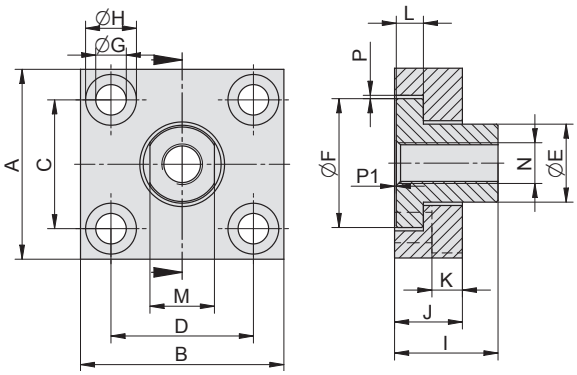

Piston Ø*	A	B	C	D	E	F	G	H	I	J	K	L	M	N*	P	P1	Weight	Order codes
12 / 16	30	25	20	15	12	18	5.5	-	16	8	-	3.5	10	M6	1	0.5	0.02	2110 0300 0012 0000
20	35	30	25	20	14	20	5.5	-	22	8	-	3.5	13	M8	1	0.5	0.04	2110 0300 0020 0000
25 / 32	60	37	36	23	20	30	6.4	11	24	15	7	7	17	M10x1.25	1	0.5	0.20	2110 0300 0025 0000
40	60	56	42	38	25	40	9	15	30	20	9	8	19	M12x1.25	1	0.5	0.44	2101 0300 0040 0000
50 / 63	80	80	58	58	30	50	11	18	32	20	11	9	24	M16x1.5	1	0.5	0.84	2101 0300 0050 0000
80 / 100	90	90	65	65	40	60	14	20	35	20	13	10	36	M20x1.5	1	0.5	1.10	2101 0300 0080 0000
125	90	90	65	65	40	60	14	20	35	20	13	10	36	M27x2	1	0.5	1.06	2101 0300 0125 0000
160 / 200	120	120	80	80	50	70	17	26	42	20	14	12	46	M36x2	1	0.5	1.98	2101 0300 0160 0000

*) Please check dimensions of thread on cylinder and accessories for piston rod, before you order it (for example: compact cylinder piston dia. 40 mm has thread M10x1.25 on piston rod, piston rod clevis for cylinder dia. 40 has thread M12x1.25, so it is necessary to order picton rod clevis for cylinder dia. 25/32, where is thread M10x1.25).

PISTON ROD EYE

Supply contains:
1 pc eye

Can be combined with:

Narrow swivel flange
Rectangular swivel flange
(page 4-9)

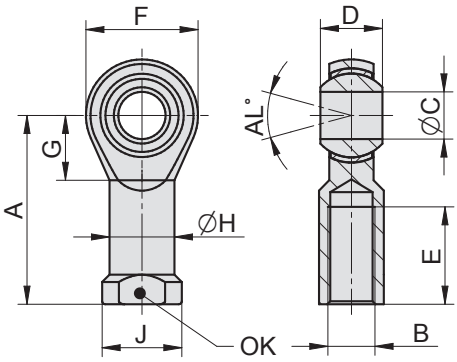

Piston ∅*	A	B	C	D	E	F	G	H	J*	OK	AL	Weight	Order codes
12 / 16	31	M6	6	9	12	18	9	10	13	11	35	0.02	2101 0200 0012 0000
20	36	M8	8	12	14	24	13	13	16	13	30	0.01	2101 0200 0020 0000
20	36	M8	8	8	14	26	13	13	16	14	30	0.02	2110 0200 0020 0000
25	42	M10x1.25	10	9	16	28	15	14	16	14	24	0.06	2110 0200 0025 0000
32	43	M10x1.25	10	14	20	30	15	15	19	16	24	0.04	2101 0200 0025 0000
40	50	M12x1.25	12	16	22	34	17	17	21	18	22	0.10	2101 0200 0040 0000
50 / 63	64	M16x1.5	16	21	28	40	22	21	27	22	15	0.14	2101 0200 0050 0000
80 / 100	77	M20x1.5	20	25	33	51	27	28	34	30	18	0.38	2101 0200 0080 0000
125	110	M27x2	30	37	42	70	36	38	50	41	12	1.40	2101 0200 0125 0000
160 / 200	125	M36x2	35	43	56	100	44	52	60	55	16	1.74	2101 0200 0160 0000
250	142	M42x2	40	49	60	110	46	60	73	65	14	3.32	2101 0200 0250 0000
320	160	M48x2	50	60	68	128	59	65	75	66	12	5.50	2101 0200 0320 0000

*) Please check dimensions of thread on cylinder and accessories for piston rod, before you order it (for example: compact cylinder piston dia. 40 mm has thread M10x1.25 on piston rod, piston rod clevis for cylinder dia. 40 has thread M12x1.25, so it is necessary to order picton rod clevis for cylinder dia. 25/32, where is thread M10x1.25).

Piston rod eye for anticorrosive - hygienic clean cylinders can be found on page 4-26.

4

SELF-ALIGNING PISTON ROD COUPLING

Supply contains:
1 pc coupling

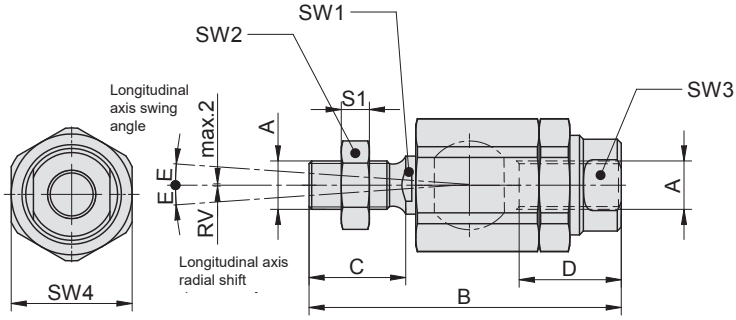

Piston ∅*	A*	B	C	D	E	S1	SW1	SW2	SW3	SW4	RV	Weight	Order codes
8 / 10	M4	33	8	13	4	2.2	3.2	7	7	11	0.5	0.015	2110 0400 0008 0000
12 / 16	M6	37	12	14	4	3.2	5	10	7	13	0.5	0.02	2110 0400 0012 0000
20	M8	42.5	15	18	4	4	7	13	10	17	0.5	0.06	2110 0400 0020 0000
25 / 32	M10x1.25	69.5	20	26	5	6	12	17	19	30	0.7	0.21	2110 0400 0025 0000
40	M12x1.25	74.5	24	26	5	7	12	19	19	30	0.7	0.22	2110 0400 0040 0000
50 / 63	M16x1.5	103	32	34	5	8	19	24	30	41	1.0	0.65	2110 0400 0050 0000
80 / 100	M20x1.5	120	40	42	5	9	19	30	30	41	1.0	0.72	2110 0400 0080 0000
125	M27x2	157	54	48	5	13	24	41	32	55	2.0	1.78	2110 0400 0125 0000
160 / 200	M36x2	251	72	80	4	18	32	50	50	75	2.0	5.2	2110 0400 0160 0000
250	M42x2	271	82	88	4	14	40	65	60	85	2.0	8.7	2110 0400 0250 0000

*) Please check dimensions of thread on cylinder and accessories for piston rod, before you order it (for example: compact cylinder piston dia. 40 mm has thread M10x1.25 on piston rod, piston rod clevis for cylinder dia. 40 has thread M12x1.25, so it is necessary to order picton rod clevis for cylinder dia. 25/32, where is thread M10x1.25).

PISTON ROD PROTECTIVE COVER

- **FOR ALL CYLINDER TYPES**
- **FOR ANY EQUIPMENT**

Supply contains:
1 pc protective cover

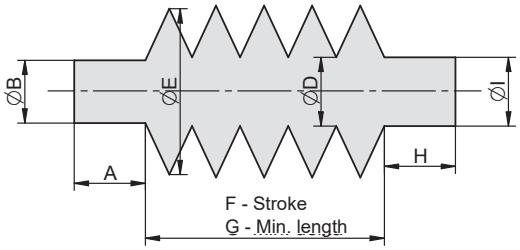

Size	D	E	For cylinders ∅	Number of annulus for 100 mm stroke	Width of 10 pcs annulus	Order codes
5	20	60	32, 40	10	10	2195 0000 5 zzzz xxx
4	40	80	50, 63, 80	8	10	2195 0000 4 zzzz xxx
3	50	130	100, 125	4	10	2195 0000 3 zzzz xxx
2	60	155	160, 200	3	10	2195 0000 2 zzzz xxx
1	100	180	250, 320	3	10	2195 0000 1 zzzz xxx

Notice: zzzz means cover stroke in mm, xxx is ordinal number, which will be assigned by sales dept. on the base of A,B,H and I dimensions.

Material: double-sided hyped-up fabric, water, oil and dust resistant
Temperature range: -20 to +80°C
Covers are fixed by clamps - there is necessary to select proper size according to diameters, to which will be the cover fixed - see below.
We produce protective covers to customer's request (length, form, flange form. If you need protective cover for our pneumatic cylinder, just let us know order code of that cylinder and order code of mounting accessories, which is mounted on piston rod. If you need protective cover for another application, send us a request with dimensions which are important and we will send you offer by return.

4

Cover clamp

Material: zinc plated steel

Diameter	Order codes
8 to 12	3910 1000 8012 0000
10 to 16	3910 1001 0016 0000
12 to 20	3910 1001 2020 0000
16 to 25	3910 1001 6025 0000
20 to 32	3910 1002 0032 0000
25 to 40	3910 1002 5040 0000
32 to 50	3910 1003 2050 0000
50 to 70	3910 1005 0070 0000
70 to 90	3910 1007 0090 0000
90 to 110	3910 1009 0110 0000
110 to 130	3910 1011 0130 0000
130 to 150	3910 1013 0150 0000
140 to 160	3910 1014 0160 0000

FLANGE MOUNTING FOR CYLINDER

• ISO 15552, VDMA 24562, NF E 49003.1
• DIN ISO 6431, VDMA 24562, NF E 49003.1
• COMPACT

Supply contains:
1 pc flange mounting
4 pcs screws

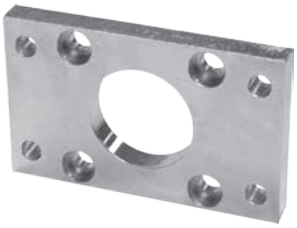

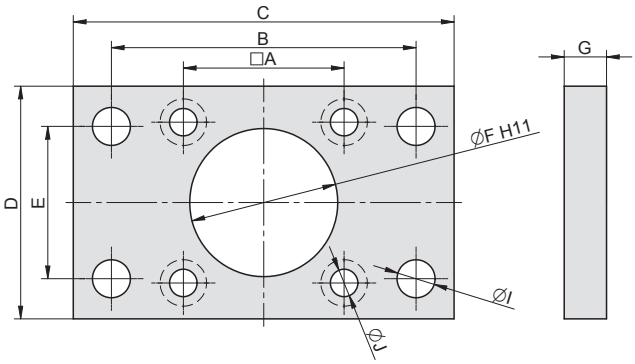

Piston ∅	A	B	C	D	E	F	G	I	J	Weight	Order codes
32	32.5	64	80	50	32	30	10	7	6.5	0.24	2101 2000 0032 0000
40	38	72	90	55	36	35	10	9	6.5	0.28	2101 2000 0040 0000
50	46.5	90	110	70	45	40	12	9	9	0.56	2101 2000 0050 0000
63	56.5	100	120	75	50	45	12	9	9	0.64	2101 2000 0063 0000
80	72	126	153	100	63	45	16	12	11	1.60	2101 2000 0080 0000
100	89	150	178	115	75	55	16	14	11	2.18	2101 2000 0100 0000
125	110	180	220	140	90	60	20	16	14	4.16	2101 2000 0125 0000
160	140	230	260	190	115	65	20	18	18	7.06	2101 2000 0160 0000
200	175	270	312	220	135	75	25	22	18	12.20	2101 2000 0200 0000
250	220	330	380	270	165	90	25	26	22	18.48	2101 2000 0250 0000
320	270	400	460	340	200	110	30	33	26	32.90	2101 2000 0320 0000

FOOT MOUNTING FOR CYLINDER

• ISO 15552, VDMA 24562, NF E 49003.1
• DIN ISO 6431, VDMA 24562, NF E 49003.1
• COMPACT

Supply contains:
1 pc foot mounting
2 pcs screws

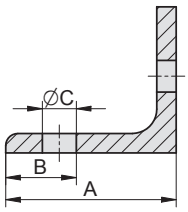

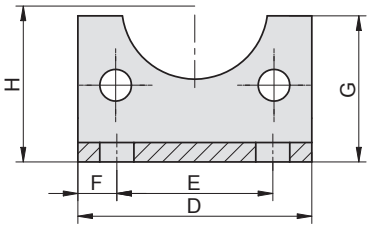

Piston ∅	A	B	C	D	E	F	G	H	Weight	Order codes
32	35	11	7	48	32	5	30	32	0.08	2101 2100 0032 0000
40	40	12	10	55	36	9.5	32	36	0.12	2101 2100 0040 0000
50	45	13	10	65	45	10	40	45	0.16	2101 2100 0050 0000
63	45	13	10	75	50	12.5	40	50	0.22	2101 2100 0063 0000
80	60	19	12	95	63	16	60	63	0.50	2101 2100 0080 0000
100	60	19	12	115	75	20	60	71	0.54	2101 2100 0100 0000
125	70	30	16.5	140	90	25	70	90	1.22	2101 2100 0125 0000
160	85	25	18.5	185	115	35	90	115	2.55	2101 2100 0160 0000
200	105	35	24	235	135	50	120	135	4.68	2101 2100 0200 0000
250	115	40	28	270	165	52.5	150	165	10.84	2101 2100 0250 0000
320	130	45	35	350	200	75	170	200	14.75	2101 2100 0320 0000

FOOT MOUNTING FOR FRONT CAP OF CYLINDER

• DIN ISO 6431, VDMA 24562 WITH DOUBLE PISTON ROD

Supply contains:
1 pc foot mounting
2 pcs screws

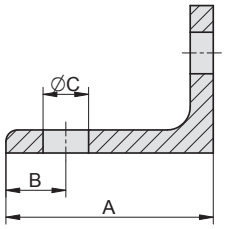

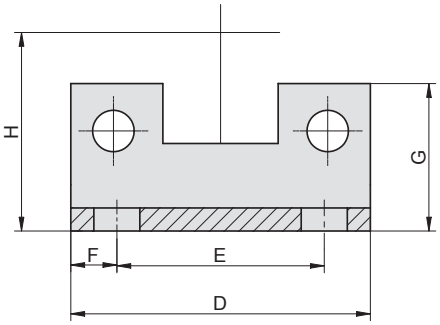

Piston ∅	A	B	C	D	E	F	G	H	Weight	Order codes
32	35	11	7	48	32	5	23.5	32	0.08	2101 2200 0032 0000
40	40	12	10	55	36	9.5	25.5	36	0.12	2101 2200 0040 0000
50	45	13	10	65	45	10	32	45	0.16	2101 2200 0050 0000
63	45	13	10	75	50	12.5	35	50	0.22	2101 2200 0063 0000
80	60	19	12	95	63	16	42	63	0.50	2101 2200 0080 0000
100	60	19	12	115	75	20	45	71	0.54	2101 2200 0100 0000

4

Note: There is necessary to use standard foot mounting for cylinders DIN ISO 6431, VDMA 24562 (order code 2101 2100 0xxx 0000) when mounting on end cap. See page 4-5.

BOXER FLANGE MOUNTING FOR CYLINDER

• ISO 15552, VDMA 24562, NF E 49003.1
• DIN ISO 6431, VDMA 24562, NF E 49003.1
• COMPACT

Supply contain:s
1 pc flange
4 pcs screws

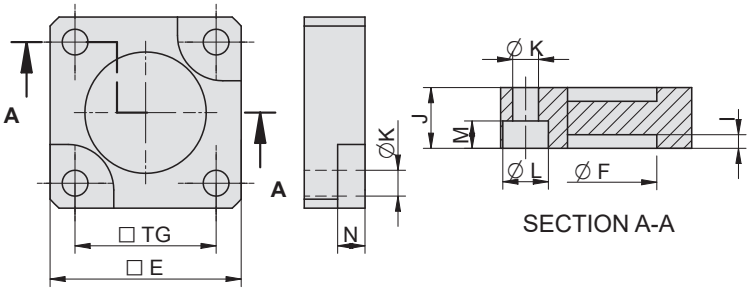

Using the boxer flange mounting, the 2 cylinders can be mounted together by end caps, so the piston rods will move against each other. If the cylinders will have the same stroke, the final assembly will have 3 positions when cylinders will be in end positions. When the cylinders will have various strokes, the final assembly will have 4 positions.
Attention: the body of cylinders are moving in this assembly, so it is necessary to use flexible air connections.

Piston ∅	TG	E	F	J	M	N	K	L	I	Weight	Order codes
32	32.5	45	30	15	6.5	8	6.5	11	4.5	0.052	2101 2300 0032 0000
40	38	56	35	15	6.5	8	6.5	11	4.5	0.084	2101 2300 0040 0000
50	46.5	63	40	20	9	9	8.5	15	4.5	0.154	2101 2300 0050 0000
63	56.5	75	45	20	9	9	8.5	15	4.5	0.223	2101 2300 0063 0000
80	72	95	45	25	12	12	10.5	18	4.5	0.511	2101 2300 0080 0000
100	89	115	55	25	12	12	10.5	18	4.5	0.774	2101 2300 0100 0000
125	110	140	60	30	15	13	12.5	20	6.5	1.714	2101 2300 0125 0000
160	140	185	65	35	17.5	15	16.5	26	6.5	2.945	2101 2300 0160 0000
200	175	235	75	35	17.5	15	16.5	26	6.5	4.844	2101 2300 0200 0000
250	220	270	90	45	21.5	18	21	34	10.5	8.167	2101 2300 0250 0000
320	270	350	110	50	27	20	25	40	10.5	15.47	2101 2300 0320 0000

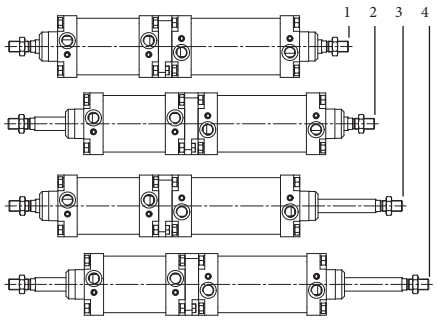

SWIVEL FLANGE FOR CYLINDER

• ISO 15552, VDMA 24562, NF E 49003.1
• DIN ISO 6431, VDMA 24562, NF E 49003.1
• COMPACT

Supply contains:
1 pc flange
1 pc pivot pin
2 pcs retaining rings
4 pcs screws

Can be combined with:

Clevis foot mounting (page 4-7)

Swivel flange (page 4-8)

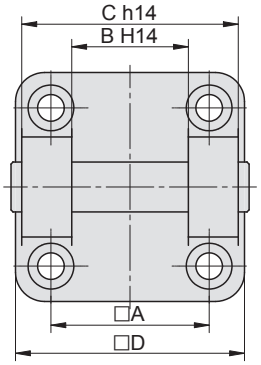

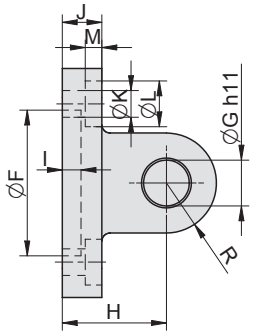

Piston ∅	A	B	C	D	F	G	H	I	J	K	L	M	R	Weight	Order codes
32	32.5	26	45	48	30	10	22	4.5	6	6.6	-	-	8.5	0.10	2101 3000 0032 0000
40	38	28	52	55	35	12	25	4.5	6	6.6	-	-	10	0.16	2101 3000 0040 0000
50	46.5	32	60	65	40	12	27	4.3	6.5	9.2	-	-	10	0.26	2101 3000 0050 0000
63	56.5	40	70	75	45	16	32	4.5	6.5	9.2	-	-	12	0.38	2101 3000 0063 0000
80	72	50	90	95	45	16	36	-	11	11	-	-	13	0.72	2101 3000 0080 0000
100	89	60	110	115	55	20	41	-	10	11.2	-	-	16	1.06	2101 3000 0100 0000
125	110	70	130	140	60	25	50	7	19	14	20	9	25	3.90	2101 3000 0125 0000
160	140	90	170	185	65	30	55	7	20	18	26	10	30	7.44	2101 3000 0160 0000
200	175	90	170	235	75	30	60	7	24	18	26	13	30	12.08	2101 3000 0200 0000
250	220	110	200	270	90	40	70	11	25	22	34	14	40	17.55	2101 3000 0250 0000
320	270	120	220	350	110	45	80	11	30	26	46	15	45	31.60	2101 3000 0320 0000
400	350	120	220	430	110	45	90	12	28	26	46	14	53.5	47.00	2101 3000 0400 0000

CLEVIS FOOT MOUNTING FOR CYLINDER

• ISO 15552, VDMA 24562, NF E 49003.1
• DIN ISO 6431, VDMA 24562, NF E 49003.1
• COMPACT

Supply contains:
1 pc clevis

Can be combined with:

Swivel flange (page 4-7)

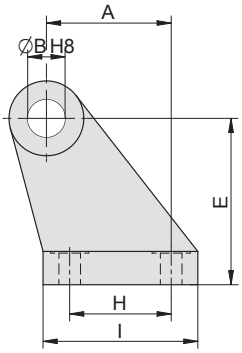

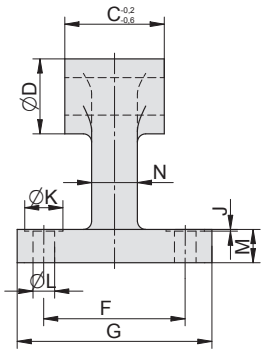

Piston ∅	A	B	C	D	E	F	G	H	I	J	K	L	M	N	Weight	Order codes
32	21	10	26	20	32	38	51	18	31	1	11	6.4	8	10	0.11	2101 3100 0032 0000
40	24	12	28	23	36	41	54	22	35	1	11	6.4	10	12	0.09	2101 3100 0040 0000
50	33	12	31.8	20	45	50	65	30	45	-	-	9	12	15	0.20	2101 3100 0050 0000
63	37	16	39.8	24	50	52	67	35	50	-	-	9.2	12	15	0.28	2101 3100 0063 0000
80	47	16	49.8	26	63	66	86	40	60	-	-	11	14	20	0.47	2101 3100 0080 0000
100	55	20	59.8	32	71	76	93	50	67	-	-	11	15	20	0.60	2101 3100 0100 0000
125	70	25	69.6	50	90	94	124	60	90	3	20	14	20	28	1.10	2101 3100 0125 0000
160	97	30	89.5	60	115	118	156	88	126	4	20	14	25	35	5.20	2101 3100 0160 0000
200	105	30	89.5	60	135	122	162	90	130	2	26	18	30	38	7.60	2101 3100 0200 0000
250	128	40	108.5	80	165	150	200	110	160	4	34	22	35	45	16.20	2101 3100 0250 0000
320	150	45	119.5	90	200	170	234	122	186	2	46	26	40	55	25.34	2101 3100 0320 0000

SWIVEL FLANGE WITH SPHERICAL BEARING

- ISO 15552, VDMA 24562, NF E 49003.1
- DIN ISO 6431, VDMA 24562, NF E 49003.1
- COMPACT

Supply contains:
1 pc flange
4 pcs screws

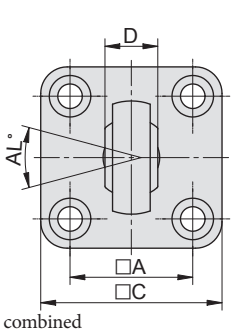

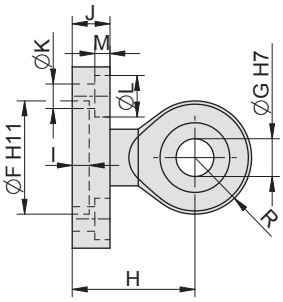

Flange design for piston dia 125 and more

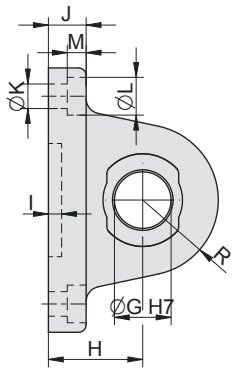

Can be combined with:

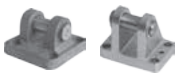

Narrow swivel flange
Rectangular swivel flange
(page 4-9)

Piston ∅	A	AL	C	D	F	G	H*	I	J	K	L	M	R	Weight	Order codes
32	32.5	15	48	14	30	10	32.5	4.5	10	6.4	11	4	14	0.20	2101 3200 0032 0000
40	38	15	55	16	35	12	32.5	4.5	10	6.4	11	4	17	0.26	2101 3200 0040 0000
50	46.5	15	65	21	40	16	40	6.5	12	8.5	15	8	21.5	0.44	2101 3200 0050 0000
63	56.5	15	75	21	45	16	40	6.5	12	8.5	15	8	21.5	0.56	2101 3200 0063 0000
80	72	18	94	25	45	20	49	5.5	14	10.5	18	8	25	1.16	2101 3200 0080 0000
100	89	18	115	25	55	20	49	5.5	14	10.5	18	8	25	1.54	2101 3200 0100 0000
125	110	15	140	37	60	30	50	7	20	13	20	10	40	3.46	2101 3200 0125 0000
160	140	16	185	43	65	35	55	7	20	18	26	10	46	5.60	2101 3200 0160 0000
200	175	16	235	43	75	35	60	7	24	18	26	10	47	10.72	2101 3200 0200 0000
250	220	16	270	49	90	40	70	12	24	22	34	13	56	14.80	2101 3200 0250 0000
320	270	16	350	60	110	50	80	12	30	26	46	15	64	28.94	2101 3200 0320 0000

*) For the swivel flanges for diameters 32-100 mm, the H value does not correspond to the ISO 15552 standard.

SWIVEL FLANGE FOR CYLINDER

- ISO 15552, VDMA 24562, NF E 49003.1
- DIN ISO 6431, VDMA 24562, NF E 49003.1
- COMPACT

Supply contains:
1 pc swivel flange
4 pcs screws

Can be combined with:

Swivel flange
(page 4-7)

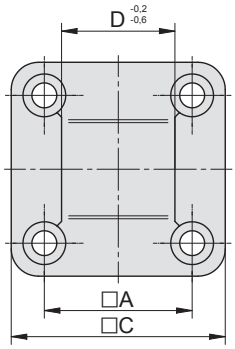

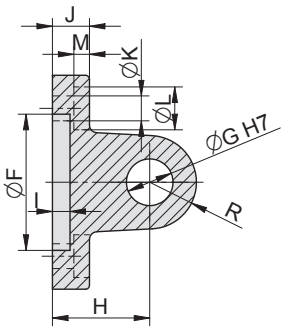

Piston ∅	A	C	D	F	G	H	I	J	K	L	M	R	Weight	Order codes
32	32.5	48	26	30	10	22	4.5	9	6.4	11	3.5	10	0.08	2101 3300 0032 0000
40	38	55	28	35	12	25	4.5	9.5	6.4	11	4	12	0.11	2101 3300 0040 0000
50	46.5	65	32	40	12	27	5	11	9	15	4.5	12	0.18	2101 3300 0050 0000
63	56.5	75	40	45	16	32	5	11	9	15	4.5	16	0.30	2101 3300 0063 0000
80	72	95	50	45	16	36	5	15	11	18	5	16	1.30	2101 3300 0080 0000
100	89	115	60	55	20	41	5	15	11	18	5	20	2.20	2101 3300 0100 0000
125	110	140	70	60	25	50	7	19	14	20	9	25	3.90	2101 3300 0125 0000
160	140	185	90	65	30	55	7	19	18	26	9	30	7.00	2101 3300 0160 0000
200	175	235	90	75	30	60	7	24	18	26	13	30	12.20	2101 3300 0200 0000
250	220	270	110	90	40	70	12	25	22	34	14	40	15.10	2101 3300 0250 0000
320	270	350	120	110	45	80	12	30	26	46	15	45	33.00	2101 3300 0320 0000
400	350	430	119.5	110	45	90	12	28	26	46	14	53.5	46.50	2101 3300 0400 0000

NARROW SWIVEL FLANGE FOR CYLINDER

• ISO 15552, VDMA 24562, NF E 49003.1
• DIN ISO 6431, VDMA 24562, NF E 49003.1
• COMPACT

Supply contains:
1 pc flange
1 pc pivot pin
2 pcs retaining rings
4 pcs screws

Can be combined with:

Piston rod eye (page 4-3)

Swivel flange with spherical b.(page 4-8)

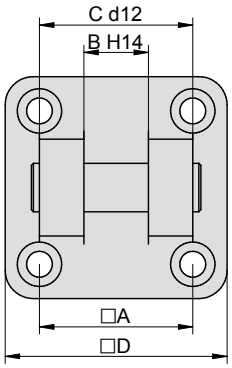

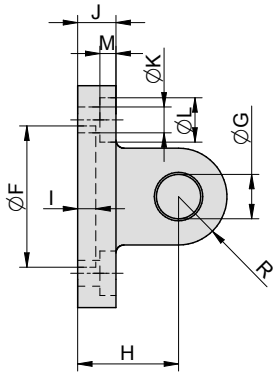

Piston ∅	A	B	C	D	F	G	H	I	J	K	L	M	R	Weight	Order codes
32	32.5	14	34	48	30	10	22	4.5	9	6.6	11	3.5	10	0.05	2101 3400 0032 0000
40	38	16	40	55	35	12	25	4.5	9.5	6.6	11	4	12	0.08	2101 3400 0040 0000
50	46.5	21	45	65	40	16	27	5	11	9.2	15	4.5	14	0.12	2101 3400 0050 0000
63	56.5	21	51	75	45	16	32	4.5	11	9.2	15	4.5	16	0.20	2101 3400 0063 0000
80	72	25	65	95	45	20	36	5	15	11	18	5	20	0.41	2101 3400 0080 0000
100	89	25	75	115	55	20	41	5	15	11.2	18	5	20	0.66	2101 3400 0100 0000
125	110	37	97	140	60	30	50	7	19	14	20	9	28	1.22	2101 3400 0125 0000
160	140	43	122	185	65	35	55	7	19	18	26	9	33	6.68	2101 3400 0160 0000
200	175	43	122	235	75	35	60	7	24	18	26	11	35	12.08	2101 3400 0200 0000
250	220	49	125	270	90	40	70	12	25	22	34	14	40	17.55	2101 3400 0250 0000
320	270	60	150	350	110	50	80	12	30	26	46	15	46	30.80	2101 3400 0320 0000

4

RECTANGULAR SWIVEL FLANGE FOR CYLINDER

• ISO 15552, VDMA 24562, NF E 49003.1
• DIN ISO 6431, VDMA 24562, NF E 49003.1
• COMPACT

Supply contains:
1 pc flange
1 pc pivot pin
2 pcs retaining rings

Can be combined with:

Piston rod eye (page 4-3)

Swivel flange with spherical b.(page 4-8)

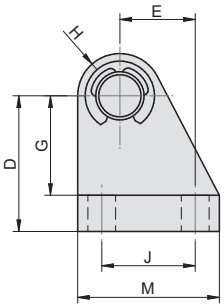

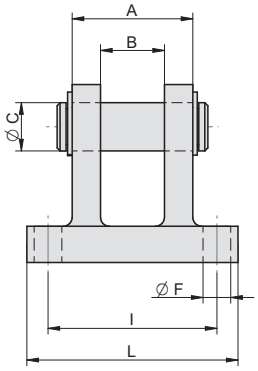

Piston ∅	A	B	C	D	E	F	G	H	I	J	L	M	Weight	Order codes
32	28	14	10	32	16	6.8	24	12	42	20	56	36	0.10	2101 3500 0032 0000
40	30	16	12	36	20	6.8	26	14	44	26	58	41	0.14	2101 3500 0040 0000
50	40	21	16	45	25	9.2	33	14	56	31	70	47	0.25	2101 3500 0050 0000
63	40	21	16	50	25	9	38	14	56	31	70	47	0.26	2101 3500 0063 0000
80	50	25	20	63	30	11	49	18	70	36	89	57	0.52	2101 3500 0080 0000
100	50	25	20	71	41	11	56	22	70	46	89	67	0.64	2101 3500 0100 0000

STRÁNSKÝ A PETRŽÍK

TRUNNION MOUNTING FOR CYLINDER

• ISO 15552, VDMA 24562, NF E 49003.1
• DIN ISO 6431, VDMA 24562, NF E 49003.1
• COMPACT

Supply contains:
1 pc trunnion

Can be combined with:

Pivot pin
(page 4-11, 4-12, 4-19)

Pivot pin to front/end cap (page 4-12)

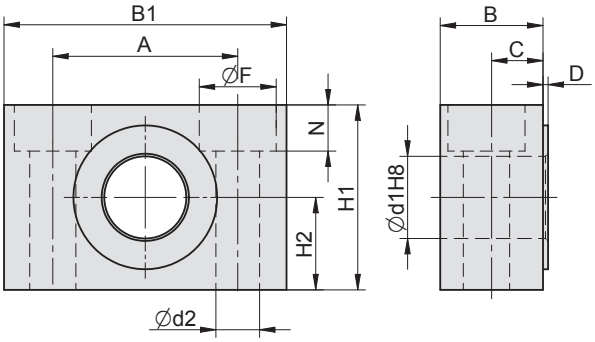

Piston ∅	A	B	B1	C	D	d1	d2	F	H1	H2	N	Weight	Order codes
32	32	17	46	9.5	1	12	6.5	11	30	15	10	0.04	2101 4000 0032 0000
40 / 50	36	20	55	11	1	16	8.5	15	36	18	9	0.08	2101 4000 0040 0000
63 / 80	42	21.5	65	11.5	1.5	20	11	18	40	20	11	0.10	2101 4000 0063 0000
100 / 125	50	27	75	14.5	1.5	25	14	20	50	25	13	0.22	2101 4000 0100 0000
160 / 200	60	38	92	20.5	2	32	18	26	60	30	17.5	0.40	2101 4000 0160 0000
250	90	54	140	23.5	4	40	22	34	70	35	21.5	1.08	2101 4000 0250 0000
320	100	63	150	28.5	4	50	26	40	80	40	26	1.35	2101 4000 0320 0000

4

TRUNNION MOUNTING FOR CYLINDER

• ISO 15552, VDMA 24562, NF E 49003.1
• DIN ISO 6431, VDMA 24562, NF E 49003.1
• COMPACT

Supply contains:
1 pc trunnion

Can be combined with:

Pivot pin
(page 4-11, 4-12, 4-19)

Pivot pin to front/end cap (page 4-12)

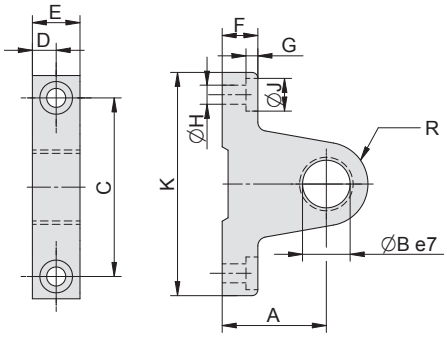

Piston ∅	A	B	C	D	E	F	G	H	J	K	R	Weight	Order codes
32	22	12	40	6	12	8	4	5.3	10	55	12	0.20	2110 4000 0032 0000
40 / 50	35	16	60	8	16	12	4	6.4	11	75	14	0.22	2110 4000 0040 0000
63 / 80	38	20	71	10	20	14	7	8.5	14	90	23	0.40	2110 4000 0063 0000
100 / 125	50	25	90	15	30	20	12	13	20	120	25	0.86	2110 4000 0100 0000

PIVOT PIN FOR CYLINDER

• DIN ISO 6431, VDMA 24562, NF E 49003.1

Supply contains:
1 pc pivot pin
8 pcs screws

Can be combined with:

Trunnion mounting
(page 4-10)

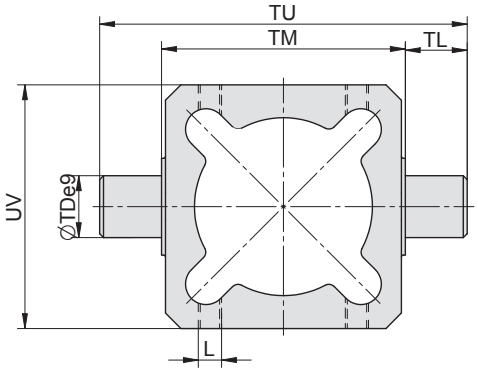

Piston ∅	L	TD	TL	TM	TT	TU	UV	Weight	Order codes
32	M5	12	12	50	25	74	63	0.12	2101 4100 0032 0000
40	M6	16	16	63	25	95	63	0.17	2101 4100 0040 0000
50	M6	16	16	75	28	107	85	0.70	2101 4100 0050 0000
63	M6	20	20	90	32	130	95	1.03	2101 4100 0063 0000
80	M6	20	20	110	32	150	120	1.46	2101 4100 0080 0000
100	M8	25	25	132	40	182	142	2.69	2101 4100 0100 0000

PIVOT PIN FOR CYLINDER

• DIN ISO 6431, VDMA 24562, NF E 49003.1
with round tube

Supply contains:
1 pc pivot pin
8 pcs screws

Can be combined with:

Trunnion mounting
(page 4-10)

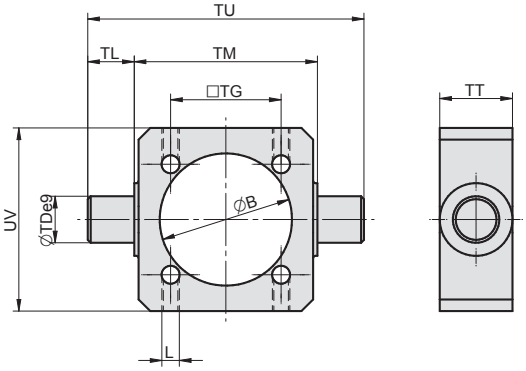

Piston ∅	L	TD	TL	TM	TT	TU	UV	TG	B	Weight	Order codes
32	M5	12	12	50	25	74	50	32.5	36.5	0.10	2101 4101 1032 0000
40	M6	16	16	63	25	95	63	38	45.5	0.16	2101 4101 1040 0000
50	M5	16	16	75	25	107	70	46.5	56	0.70	2101 4101 1050 0000
63	M6	20	20	90	25	130	84	56.5	69	0.80	2101 4101 1063 0000
80	M6	20	20	110	30	150	108	72	87	1.40	2101 4101 1080 0000
100	M8	25	25	132	40	182	130	85	106.5	2.60	2101 4101 1100 0000
125	M8	25	25	160	40	210	158	110	133	3.60	2101 4101 1125 0000
160	M8	32	32	200	40	264	196	140	172	5.40	2101 4101 1160 0000
200	M10	32	32	250	48	314	248	175	212	9.20	2101 4101 1200 0000
250	—	40	40	320	55	400	314	220	263.5	21.50	2101 4100 0250 0000
320	—	50	50	400	70	500	400	270	338	35.80	2101 4100 0320 0000

PIVOT PIN FOR CYLINDER

• ISO 15552, VDMA 24562, NF E 49003.1

Supply contains:
1 pc pivot pin
8 pcs screws

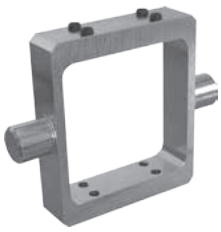

Can be combined with:

Trunnion mounting (page 4-10)

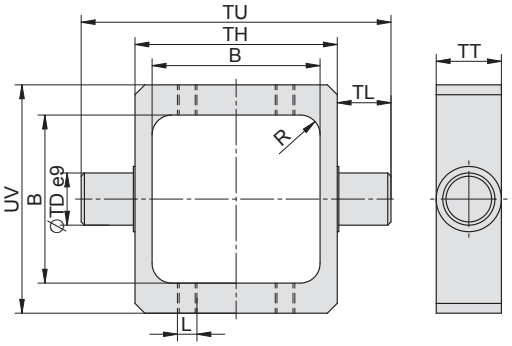

Piston ∅	L	TD	TL	TH	TT	TU	UV	B	R	Weight	Order codes
32	M6	12	12	50	20	74	65	44.5	5	0.20	2102 4100 0032 0000
40	M6	16	16	63	20	95	70	51.5	6	0.31	2102 4100 0040 0000
50	M6	16	16	75	20	107	85	64.5	6	0.37	2102 4100 0050 0000
63	M6	20	20	90	25	130	95	75.5	8	0.61	2102 4100 0063 0000
80	M8	20	20	110	25	150	120	94	10	0.90	2102 4100 0080 0000
100	M8	25	25	132	30	182	130	112	10	1.63	2102 4100 0100 0000

4

PIVOT PIN TO FRONT/END CAP FOR CYLINDER

• ISO 15552, VDMA 24562, NF E 49003.1
• DIN ISO 6431, VDMA 24562, NF E 49003.1
• COMPACT

Supply contains:
1 pc pivot pin
4 pcs screws

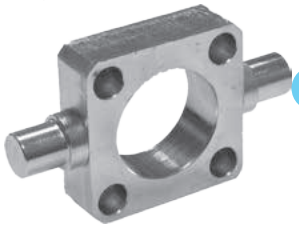

Can be combined with:

Trunnion mounting (page 4-10)

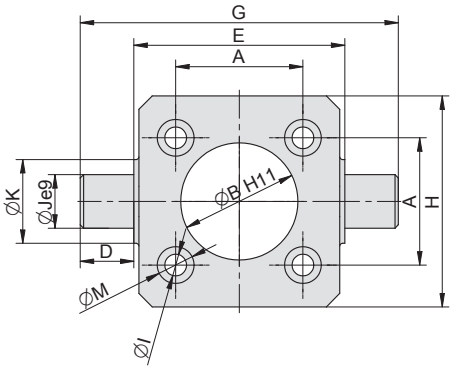

Piston ∅	A	B	D	E	F	G	H	I	J	K	M	N	Weight	Order codes
32	32.5	30	12	50	23	74	50	6.5	12	23	11	14	0.10	2101 4200 0032 0000
40	38	35	16	63	25	95	63	6.5	16	25	11	14	0.20	2101 4200 0040 0000
50	46.5	40	16	75	20	107	65	8.5	16	20	14	12	0.45	2101 4200 0050 0000
63	56.5	45	20	90	25	130	75	8.5	20	25	15	17	0.86	2101 4200 0063 0000
80	72	45	20	110	30	150	95	10.5	20	30	18	23	1.76	2101 4200 0080 0000
100	89	55	25	132	40	182	115	10.5	25	40	18	32	2.83	2101 4200 0100 0000

VALVE BRACKET FOR CYLINDER

• ISO 15552, VDMA 24562, NF E 49003.1
• DIN ISO 6431, VDMA 24562, NF E 49003.1
• COMPACT

Supply contains:
1 pc bracket
2 pcs screws

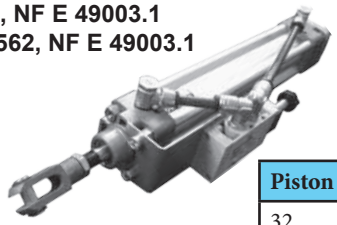

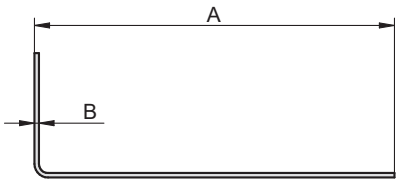

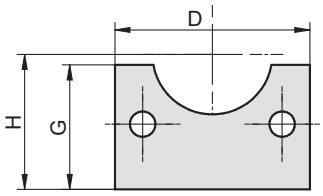

Valve bracket should be fixed on front or rear cap of cylinder. Bracket is universal, it means, that any valve can be attached on it - it is necessary to drill fixing holes in bracket according to the holes in valve. This simple but practical bracket should solve not only the problem with placing of valve in application, but it helps to better look and compact impression of application (it is not necessary to lead and fix tubes for inlet and outlet of cylinder).

Piston ∅	A	B	D	G	H	Weight	Order codes
32	160	1.5	48	30	32	0.11	2101 8000 0032 0000
40	200	1.5	55	32	36	0.15	2101 8000 0040 0000
50	230	1.5	65	41.5	45	0.20	2101 8000 0050 0000
63	230	1.5	75	41.5	50	0.24	2101 8000 0063 0000
80	230	1.5	95	60	63	0.32	2101 8000 0080 0000
100	230	1.5	115	60	71	0.30	2101 8000 0100 0000
125	250	1.5	140	70	90	0.42	2101 8000 0125 0000

GUIDE UNIT „H“ WITH BALL BEARINGS FOR CYLINDER

• ISO 15552, VDMA 24562, NF E 49003.1
• DIN ISO 6431, VDMA 24562, NF E 49003.1
• COMPACT

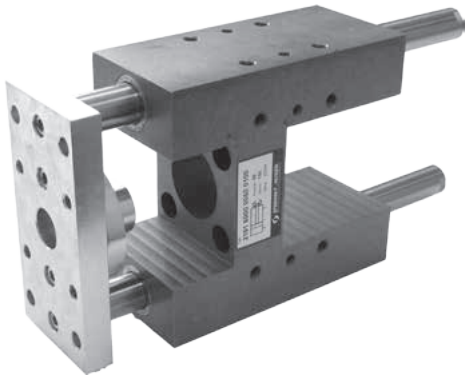

Supply contains:
1 pc guide body
1 pc flange
2 pcs guide rods
1 pc flange for fix to the cylinder

Guide unit can be mounted to any pneumatic cylinder to VDMA 24562 (there is necessary to use option 13 for cylinders with magnetic piston dia. 32 to 63 mm), ISO 15552 or compact cylinders (only for cylinders with internal thread on piston rod). Guide secures piston rod against rotation, high torque loads and radial forces. Guide rods are mounted in ball bearings without clearance.

Order codes

2101 500 00 050 0100

Guide unit H	
2101	for cylinder DIN ISO 6431, VDMA 24562, NF E 49003.1
2102	for cylinder ISO 15552
2120*	for compact cylinder*

*) Cylinders with internal thread on piston rod only

Options	
00	without options

Piston diameter	
032	32 mm
040	40 mm
050	50 mm
063	63 mm
080	80 mm
100	100 mm
125	125 mm

Stroke	
xxxx	mm of stroke e.g. 0100 = stroke 100 mm

Useful load

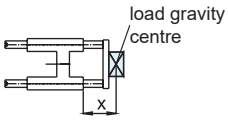

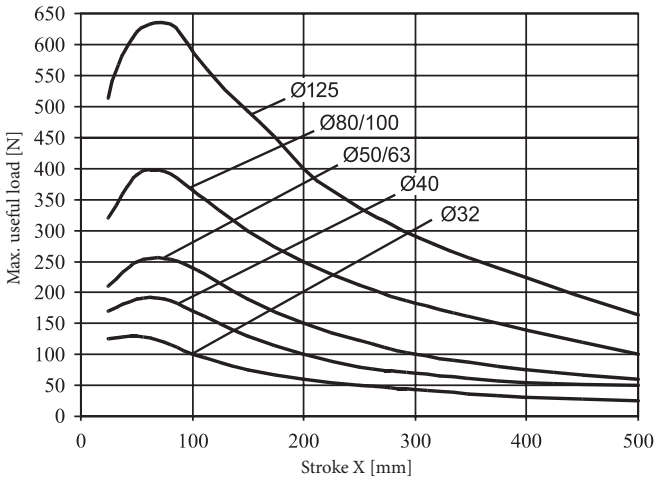

Deflection caused by load of 10 N

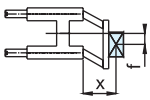

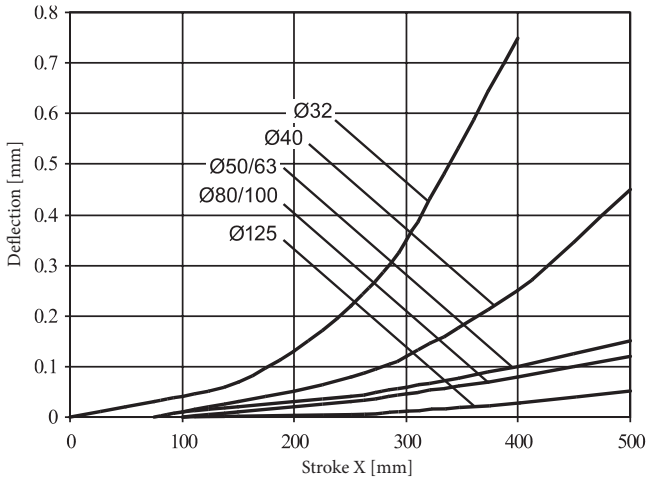

Construction / materials

- guide bars: grounded hardened steel bar Cs-53 with hard chrome plated surface
- guide body: aluminium casting
- flange and nut: zinc plated steel
- bearings: covered linear ball bearings

Piston diameter [mm]	32	40	50	63	80	100	125
Weight 0 mm stroke [kg]	1.57	2.54	4.08	5.87	10.46	14.13	21.78
Weight add. per 1 mm stroke [kg]	0.002	0.003	0.005	0.005	0.008	0.008	0.011

Dimensions

For cylinder to ISO 15552, DIN ISO 6431, VDMA 24562, NF E 49003.1 and compact (piston diameter 32 to 125 mm)

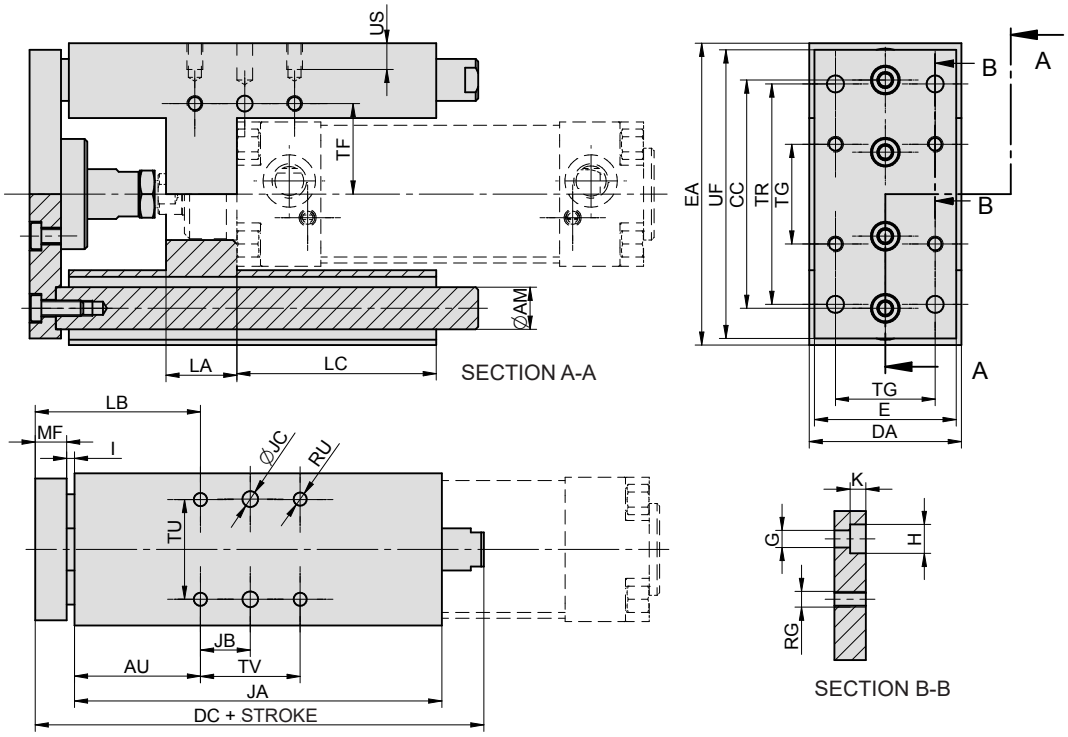

∅	AU	AZ	CC	DA	DC	E	EA	G	H	I	JA	JB	JC	K	LA	LB	LC	MA	MF	RA	RG	RU	TR	TF	TG	TH	TU	TV	UF	US
32	44	–	74	50	152	45	97	6.5	11	3	125	16.25	6	6	23	59-69	65	12	12	–	M6	M6	78	30.5	32.5	–	32.5	32.5	92	10
40	48	–	87	58	171	54	115	6.5	11	3	140	19	6	6	27	63-73	76	16	12	–	M6	M6	84	34.5	38	–	38	38	110	10
50	52	–	104	70	182	63	137	9	15	3	150	23.25	6	9	34	70-80	79	20	15	–	M8	M8	100	42.5	46.5	–	46.5	46.5	130	13
63	55.5	–	119	85	218	80	152	9	15	3	182	28.25	6	9	34	73.5-83.5	103	20	15	–	M8	M8	105	50	56.5	–	56.5	56.5	145	13
80	66	–	148	105	256	100	189	11	18	3	215	36	6	11	40	89-99	122	25	20	–	M10	M10	130	65	72	–	72	72	180	16
100	67.5	–	172	130	261	120	213	11	18	3	220	44.5	6	11	45	90.5-100.5	122	25	20	–	M10	M10	140	75	89	–	89	89	200	16
125	65	–	202	150	285	140	250	13	20	3	230	55	8	13	52	93-103	108	30	25	–	M12	M12	170	90	110	–	110	110	240	20

GUIDE UNIT „U“ WITH SLIDE BEARINGS FOR CYLINDER

• ISO 15552, VDMA 24562, NF E 49003.1
• DIN ISO 6431, VDMA 24562, NF E 49003.1
• COMPACT

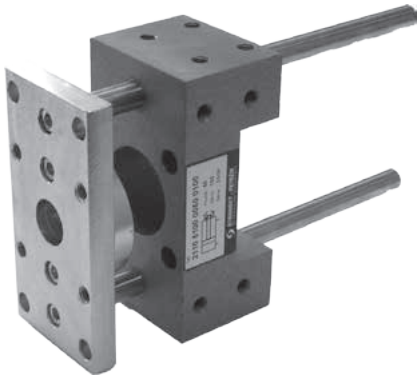

Supply contains:
1 pc guide body
1 pc flange
2 pcs guide rods
1 pc flange for fix to the cylinder

Guide unit can be mounted on any pneumatic cylinder to VDMA 24562, ISO 15552 or compact (only for cylinders with internal thread on piston rod). Guide secures piston rod against rotation, high torque loads and radial forces. Guide rods are mounted in slide bearings without clearance.

Order codes

2101 510 00 050 0100

Guide unit U	
2101	for cylinder DIN ISO 6431, VDMA 24562, NF E 49003.1
2102	for cylinder ISO 15552
2120*	for compact cylinder*

*) Cylinders with internal thread on piston rod only

Options	
00	without options

Piston diameter	
032	32 mm
040	40 mm
050	50 mm
063	63 mm
080	80 mm
100	100 mm
125	125 mm

Stroke	
xxxx	mm of stroke e.g. 0100 = stroke 100 mm

4

Useful load

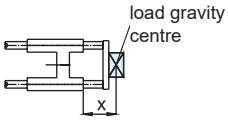

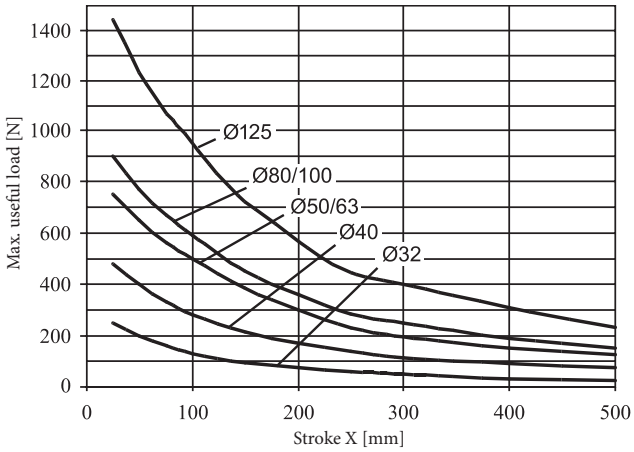

Construction / materials

- guide bars: grounded round steel bar CK45 with chrome plated surface
- guide body: aluminium casting
- flange and nut: zinc plated steel
- bearings: slide, self-lubricating

Piston diameter [mm]	32	40	50	63	80	100	125
Weight 0 mm stroke [kg]	0.67	1.04	1.65	2.01	2.68	6.69	20.24
Weight add. per 1 mm stroke [kg]	0.001	0.002	0.002	0.002	0.003	0.003	0.012

Dimensions

For cylinder to ISO 15552, DIN ISO 6431, VDMA 24562, NF E 49003.1 and compact (piston diameter 32 to 125 mm)

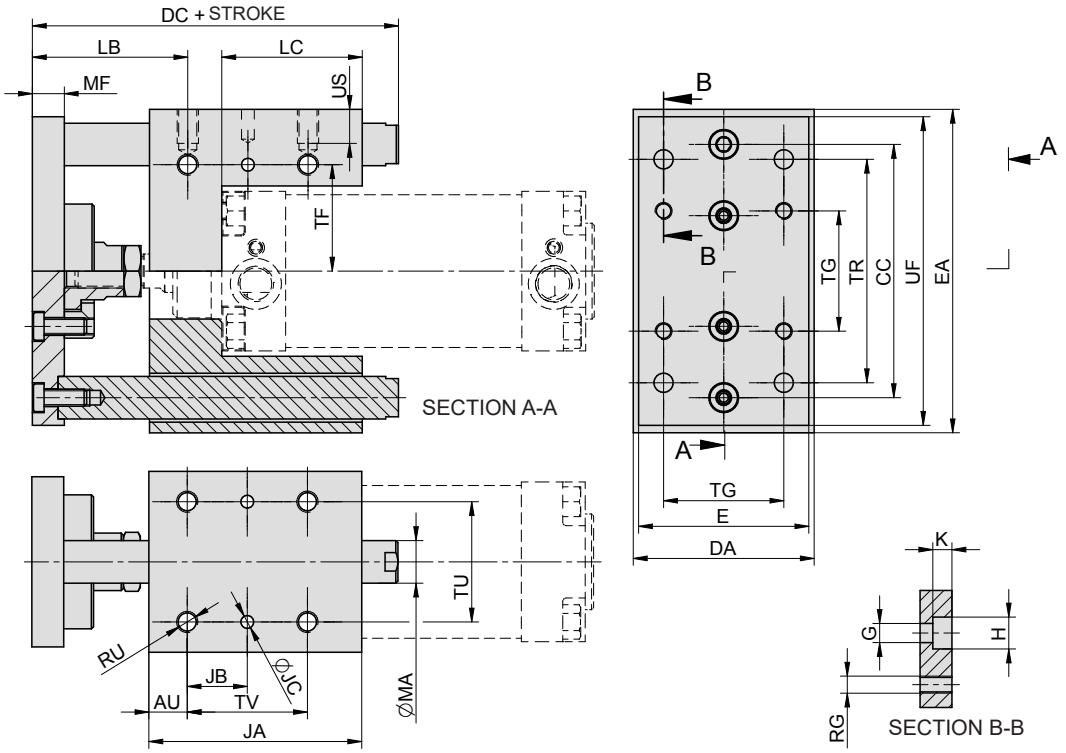

Ø	AU	CC	DA	DC	E	EA	G	H	JA	JB	JC	K	LB	LC	MA	MF	RG	RU	TR	TF	TG	TU	TV	UF	US
32	12	74	50	130	45	97	6.5	11	70	16.25	6	6	59-69	50	12	12	M6	M6	78	30.5	32.5	32.5	32.5	92	10
40	14	87	58	145	54	115	6.5	11	80	19	6	6	63-73	55	16	12	M6	M6	84	34.5	38	38	38	110	10
50	18	104	70	162	63	137	9	15	90	23.25	6	9	70-80	56	20	15	M8	M8	100	42.5	46.5	46.5	46.5	130	13
63	18	119	85	172	80	152	9	15	100	28.25	6	9	73-83	66	20	15	M8	M8	105	50	56.5	56.5	56.5	145	13
80	18	148	105	220	100	189	11	18	130	36	6	11	89-99	90	25	20	M10	M10	130	65	72	72	72	180	16
100	19.5	172	130	230	120	213	11	18	140	44.5	6	11	90.5-100.5	95	25	20	M10	M10	140	75	89	89	89	200	16
125	20	202	157	285	140	254	13	20	175	55	6	13	110-120	117	32	25	M12	M12	175	92	110	110	110	240	25

PISTON ROD CLEVIS FOR CYLINDERS

• CNOMO 06.07.02

Supply contains:
1 pc clevis
1 pc pivot pin
2 pcs retaining rings

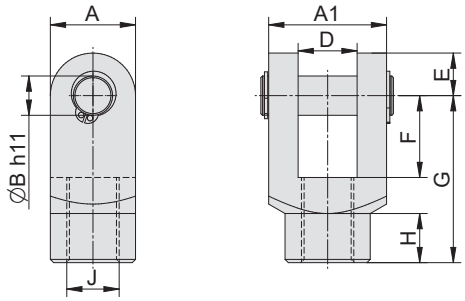

Piston ∅	A	A1	B	D	E	F	G	H	J	Weight	Order codes
32	22	22	8	11	9	16	36	13	M10	0.11	2114 0100 0032 0000
40 / 50	26	36	12	18	13	25	51	15	M16x1.5	0.26	2114 0100 0040 0000
63 / 80	34	45	16	22	17	33	63	18.5	M20x1.5	0.53	2114 0100 0063 0000
100 / 125	42	63	20	30	20	40	85	30	M27x2	1.13	2114 0100 0100 0000
160 / 200	60	80	25	40	25	40	115	45	M36x2	2.82	2114 0100 0160 0000

4

FLANGE MOUNTING FOR CYLINDER

• CNOMO 06.07.02

Supply contains:
1 pc flange mounting
4 pcs nuts

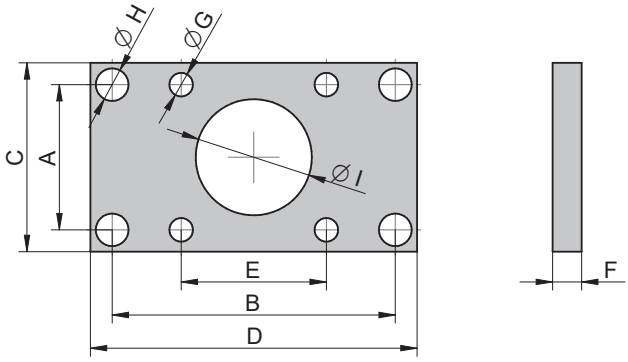

Piston ∅	A	B	C	D	E	F	G	H	I	Weight	Order codes
32	33	68	45	80	33	8	6,5	9	25	0,18	2114 2000 0032 0000
40	40	78	52	90	40	8	6,5	9	32	0,23	2114 2000 0040 0000
50	49	94	65	110	49	10	8,4	11	32	0,47	2114 2000 0050 0000
63	59	104	75	120	59	10	8,4	11	45	0,56	2114 2000 0063 0000
80	75	130	95	150	75	12	10,5	14	45	1,13	2114 2000 0080 0000
100	90	150	115	170	90	12	10,5	14	55	1,54	2114 2000 0100 0000
125	110	180	140	205	110	16	13,5	18	55	3,13	2114 2000 0125 0000
160	140	228	180	260	140	20	16,5	22	65	6,48	2114 2000 0160 0000
200	175	268	220	300	175	20	16,5	22	65	9,46	2114 2000 0200 0000

FOOT MOUNTING FOR CYLINDER

• CNOMO 06.07.02

Supply contains:
1 pc foot mounting
2 pcs nuts
2 pcs washers

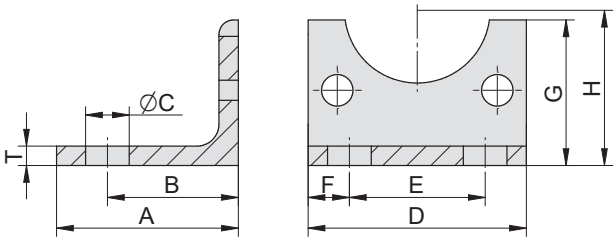

Piston ∅	A	B	C	D	E	F	G	H	T	Weight	Order codes
32	37.5	27	9	45	28	8.5	30	32	4	0.09	2114 2100 0032 0000
40	35	27	9	52	36	8	32	36	5	0.12	2114 2100 0040 0000
50	45	35	11	65	45	10	40	45	5	0.19	2114 2100 0050 0000
63	45	35	11	75	55	10	40	50	5	0.22	2114 2100 0063 0000
80	55.5	43	14	95	70	12.5	60	63	6	0.45	2114 2100 0080 0000
100	55	43	14	115	90	12.5	60	73	6	0.55	2114 2100 0100 0000
125	72	52	18	140	100	20	70	91	8	1.14	2114 2100 0125 0000
160	87	62	22	180	130	25	90	115	10	2.29	2114 2100 0160 0000
200	95	62	22	220	170	25	120	135	12	4.03	2114 2100 0200 0000

SWIVEL FLANGE FOR CYLINDER

• CNOMO 06.07.02

Supply contains:
1 pc flange
1 pc pivot pin
2 pcs retaining rings
4 pcs nuts
4 pcs washers

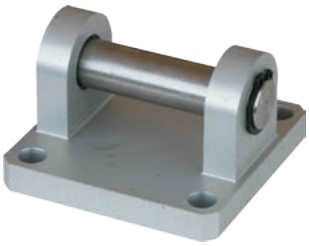

Can be combined with:

Swivel flange
(page 4-19)

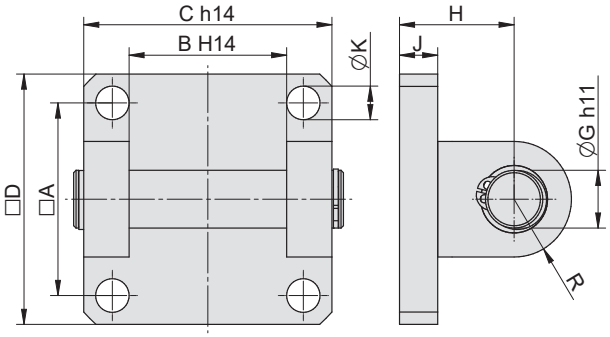

Piston ∅	A	B	C	D	G	H	J	K	R	Weight	Order codes
32	33	26	45	45	8	18	8	7	8	0.09	2114 3000 0032 0000
40	40	33	52	52	12	24	8	7	12	0.14	2114 3000 0040 0000
50	49	33	60	65	12	26	10	9	12	0.23	2114 3000 0050 0000
63	59	47	70	75	16	30	10	9	16	0.34	2114 3000 0063 0000
80	75	47	90	95	16	32	12	11	16	1.27	2114 3000 0080 0000
100	90	57	110	115	20	37	12	11	20	2.05	2114 3000 0100 0000
125	110	57	140	140	20	41	16	14	20	3.65	2114 3000 0125 0000
160	140	72	180	180	25	55	20	18	25	7.63	2114 3000 0160 0000
200	175	72	220	220	25	55	20	18	25	10.43	2114 3000 0200 0000

SWIVEL FLANGE FOR CYLINDER

• CNOMO 06.07.02

Supply contains:
1 pc swivel flange

Can be combined with:

Narrow swivel flange
(page 4-18)

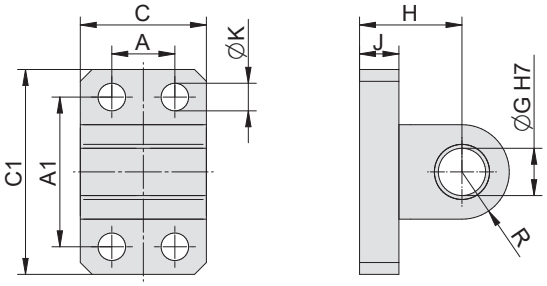

Piston ∅	A	A1	C	C1	G	H	J	K	R	Weight	Order codes
32	-	28	25	40	8	18	8	7	8	0.04	2114 3300 0032 0000
40 / 50	16	38	32	52	12	26	10	9	12	0.09	2114 3300 0040 0000
63 / 80	25	54	46	75	16	34	12	11	18	0.69	2114 3300 0063 0000
100 / 125	32	90	56	115	20	41	16	14	20	1.30	2114 3300 0100 0000
160 / 200	43	150	71	180	25	55	20	18	25	3.50	2114 3300 0160 0000

PIVOT PIN FOR CYLINDER

• CNOMO 06.07.02

Supply contains:
1 pc pivot pin
8 pcs screws

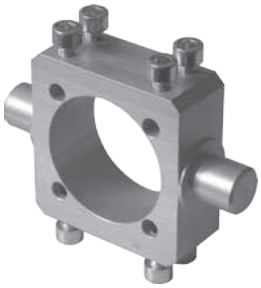

Can be combined with:

Trunnion mounting
(page 4-10)

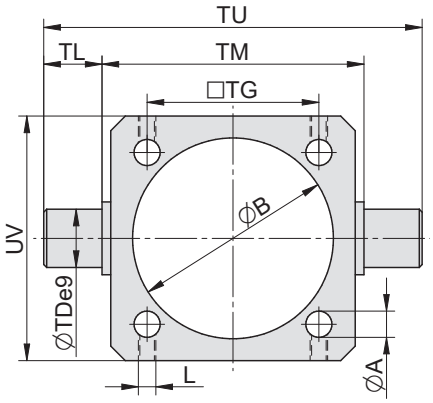

Piston ∅	A	B	TD	TL	TM	TT	TU	UV	TG	L	Weight	Order codes
32	7	37	12	12	50	25	74	46	33	M5	0,10	2114 4100 0032 0000
40	7	46	16	16	63	25	95	58	40	M6	0,19	2114 4100 0040 0000
50	9	56	16	16	73	25	105	68	49	M6	0,50	2114 4100 0050 0000
63	9	69	20	20	90	25	130	84	59	M6	0,73	2114 4100 0063 0000
80	11	87	20	20	108	30	148	102	75	M6	1,12	2114 4100 0080 0000
100	11	107	25	25	131	40	181	124	90	M8	2,37	2114 4100 0100 0000
125	12,5	134	25	25	159	40	209	158	110	M8	3,51	2114 4100 0125 0000
160	17	168	32	32	198	40	262	196	140	M8	5,21	2114 4100 0160 0000
200	17	212	32	32	248	48	312	248	175	M10	9,61	2114 4100 0200 0000

FLANGE MOUNTING FOR CYLINDER
• DIN ISO 6432

Supply contains:
1 pc flange mounting

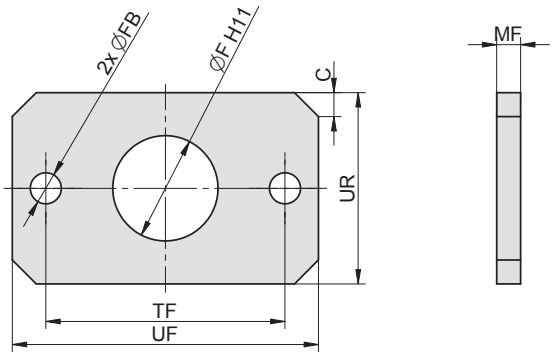

Piston ∅	C	F	FB	MF	TF	UF	UR	Weight	Order codes
12 / 16	5	16	5.5	4	40	52	28	0.04	2110 2000 0012 0000
20 / 25	5	22	6.5	5	50	64	38	0.12	2110 2000 0020 0000

4

FOOT MOUNTING FOR CYLINDER
• DIN ISO 6432

Supply contains:
1 pc foot mounting

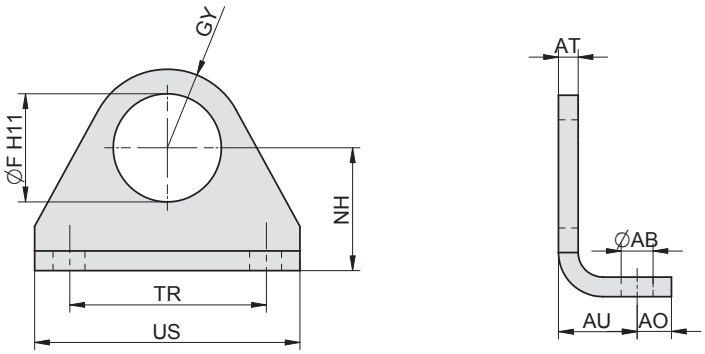

Piston ∅	AB	AO	AT	AU	F	GY	NH	TR	US	Weight	Order codes
12 / 16	5.5	6	3	13	16	12	20	32	44	0.04	2110 2100 0012 0000
20 / 25	6.5	7	4	16	22	16	25	40	54	0.10	2110 2100 0020 0000

CLEVIS FOOT MOUNTING FOR CYLINDER
• DIN ISO 6432

Supply contains:
1 pc clevis
1 pc pivot pin
2 pcs retaining rings

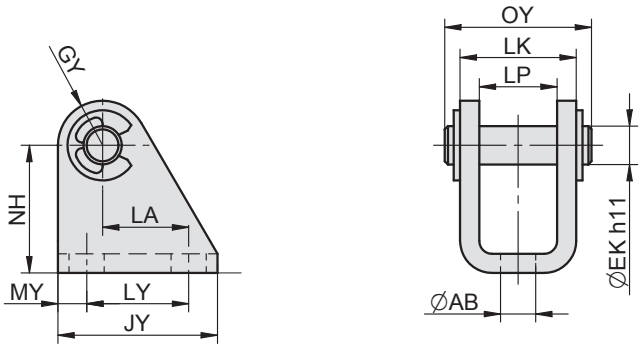

Piston ∅	AB	EK	GY	JY	LA	LK	LP	LY	MY	NH	OY	Weight	Order codes
12 / 16	5.5	6	7	25	13.5	18.2	12.2	16	4.5	20	23	0.02	2110 3000 0012 0000
20 / 25	6.5	8	10	32	16	22.2	16.2	20	6	25	30	0.02	2110 3000 0020 0000

GUIDE UNIT „H“ WITH BALL BEARINGS FOR CYLINDER

• DIN ISO 6432

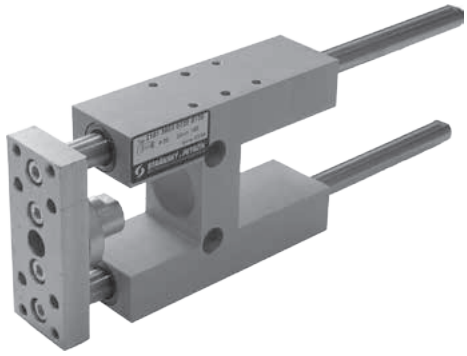

Supply contains:
1 pc guide body
1 pc flange
2 pcs guide rods
1 pc flange for fix to the cylinder

Guide unit can be mounted to any pneumatic cylinder to DIN ISO 6432. Guide secures piston rod against rotation, high torque loads and radial forces. Guide rods are mounted in ball bearings without clearance.

Order codes

2110 500 00 025 0100

Guide unit H	
2110	for cylinder DIN ISO 6432

Options	
00	without options

Piston diameter	
020	20 mm
025	25 mm

Stroke	
xxxx	mm of stroke e.g. 0100 = stroke 100 mm

4

Useful load

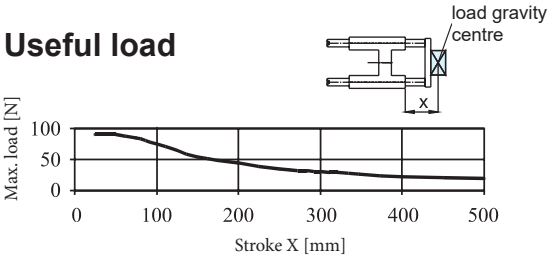

Deflection caused by load of 10 N

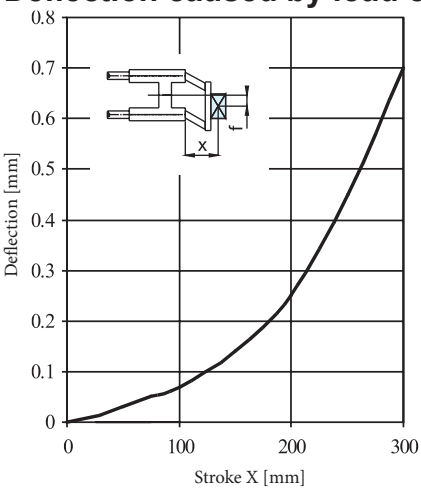

Dimensions

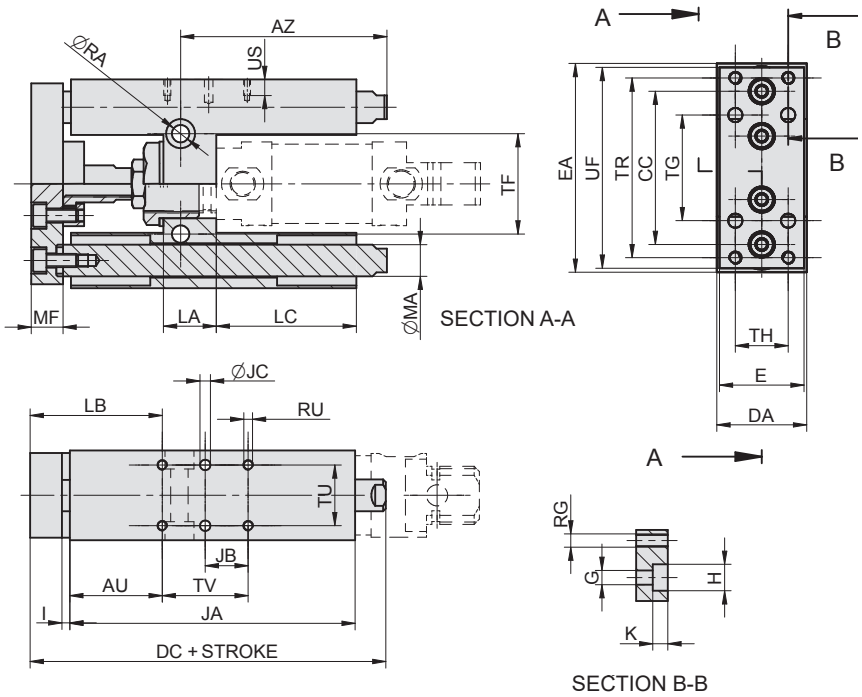

Ø	AU	AZ	CC	DA	DC	E	EA	G	H	I	JA	JB	JC	K	LA	LB
20/25	35	66,5	58	34	135	32	79	5,4	10	3	108	16,25	4	5,7	20	50-60

Ø	LC	MA	MF	RA	RG	RU	TR	TF	TG	TH	TU	TV	UF	US
20/25	53	12	12	6,6	M5	M4	68	38	40	20	23	32,5	76	8

Construction / materials

- guide bars: grounded hardened steel bar Cs-53 with hard chrome plated surface
- guide body: aluminium casting
- flange and nut: zinc plated steel
- bearings: covered linear ball bearings

Piston diameter [mm]	20	25
Weight 0 mm stroke [kg]	0,86	0,86
Weight add. per 1 mm stroke [kg]	0,002	0,002

GUIDE UNIT „U“ WITH SLIDE BEARINGS FOR CYLINDER

• DIN ISO 6432

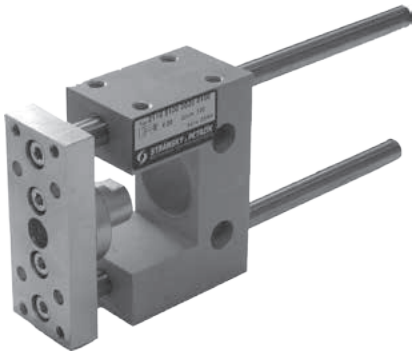

Supply contains:
1 pc guide body
1 pc flange
2 pcs guide rods
1 pc flange for fix to the cylinder

Guide unit can be mounted on any pneumatic cylinder to DIN ISO 6432. Guide secures piston rod against rotation, high torque loads and radial forces. Guide rods are mounted in slide bearings without clearance.

Order codes

2110 510 00 025 0100

Guide unit U	
2110	for cylinder DIN ISO 6432

Options	
00	without options

Piston diameter	
012	12 mm, 16 mm
020	20 mm
025	25 mm

Stroke	
xxxx	mm of stroke e.g. 0100 = stroke 100 mm

4

Useful load

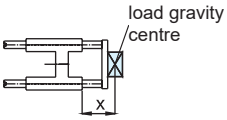

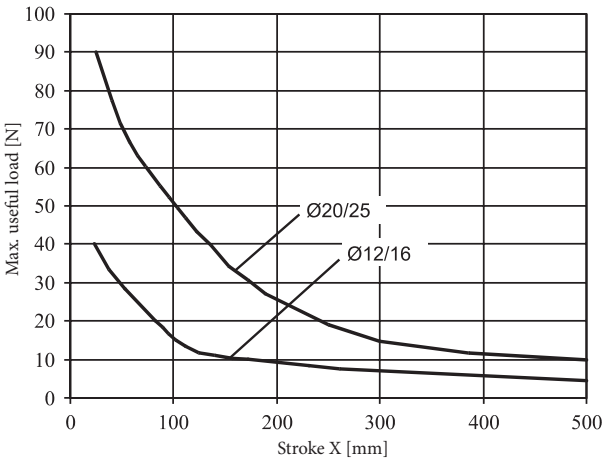

Dimensions

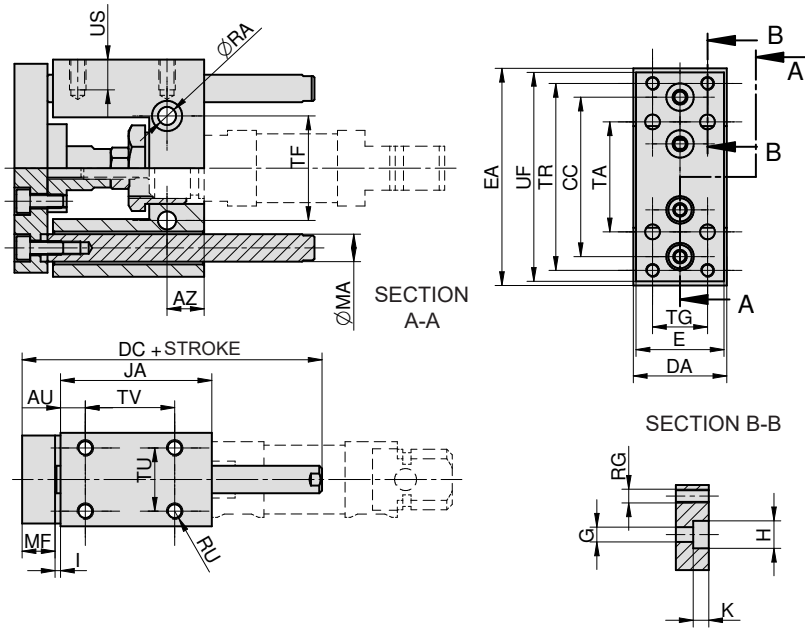

Ø	AU	AZ	CC	DA	DC	E	EA	G	H	I	JA	K	MA
12/16	7,5	58	46	30	62	27	65	4,5	8	3	39	4,6	8
20/25	9	13,5	58	34	80	32	79	5,5	10	3	55	6	10

Ø	MF	RA	RG	RU	TA	TR	TF	TG	TU	TV	UF	US
12/16	10	5,5	M4	M4	32	54	24	15	22	25	63	8
20/25	12	6,5	M5	M6	40	68	38	20	23	32,5	76	12

Construction / materials

- guide bars: grounded round steel bar CK45 with chrome plated surface
- guide body: aluminium casting
- flange and nut: zinc plated steel
- bearings: slide, self-lubricating

Piston diameter [mm]	12/16	20	25
Weight 0 mm stroke [kg]		0,49	0,48
Weight add. per 1 mm stroke [kg]		0,001	0,001

PISTON ROD CLEVIS

• DIN ISO 6432 SERIES MCMIS STAINLESS STEEL

Supply contains:
1 pc clevis
(stainless steel SUS304)
1 pc pivot pin (stainless steel)
2 pcs retaining rings

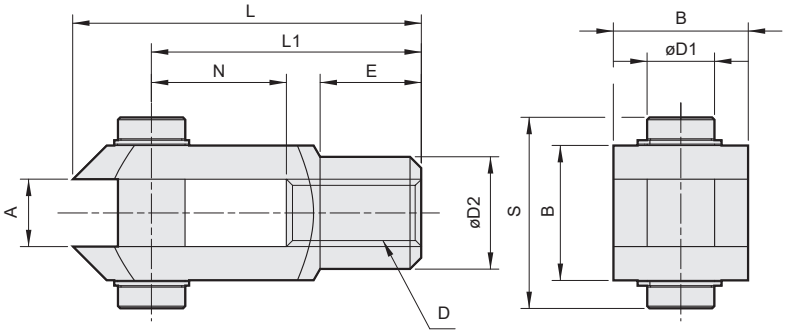

Piston ∅	A	B	D	D1	D2	E	L	L1	N	S	Weight	Order codes
12 / 16	6	12	M6	6	10	9	31	24	12	17	0,02	PYP-M6-12
20	8	16	M8	8	14	12	42	32	16	21	0,06	PYP-M6-20
25	10	20	M10x1,25	10	18	15	52	40	20	25	0,11	PYP-M6-25

PISTON ROD EYE

• DIN ISO 6432 SERIES MCMIS STAINLESS STEEL

Supply contains:
1 pc rod eye
(stainless steel, sintered bronze bush)

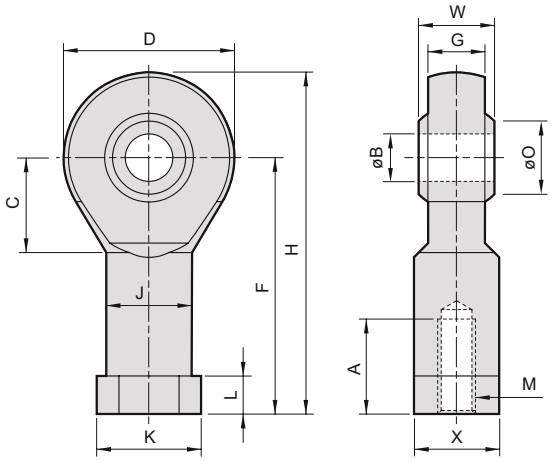

Piston ∅	A	B	C	D	F	G	H	J	K	L	M	O	W	X	Weight	Order codes
10	12	4	7	14	24	5,25	31	8	9,5	4	M4	7,6	7	8	0,01	PHS-S4-M4x0,7
12 / 16	12	6	11	20	30	6,75	40	10	13	5	M6	8,9	9	11	0,03	PHS-S6-M6x1
20	16	8	13	24	36	9	48	12,5	16	5	M8	10,4	12	14	0,05	PHS-S8-M8x1,25
25	20	10	15	28	43	10,5	57	15	19	6,5	M10x1,25	12,9	14	17	0,08	PHS-S10-M10x1,25

FLANGE MOUNTING FOR CYLINDER

• DIN ISO 6432 SERIES MCMIS STAINLESS STEEL

Supply contains:
1 pc flange (stainless steel SUS304)

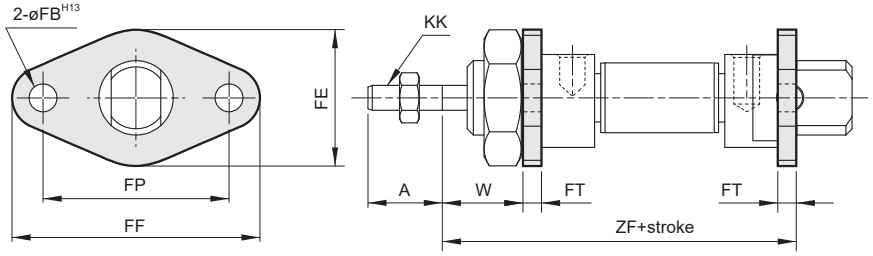

Piston ∅	A	FB	FE	FF	FP	FT	KK	W	ZF	Weight	Order codes
10	12	4,5	22	40	30	3	M4	13	65	0,01	PFA-M6-8
12	16	5,5	30	52	40	4	M6	18	74	0,03	PFA-M6-12
16	16	5,5	30	52	40	4	M6	18	79	0,03	PFA-M6-12
20	20	6,6	40	66	50	5	M8	19	96	0,05	PFA-M6-20
25	22	6,6	40	66	50	5	M10x1,25	23	101	0,05	PFA-M6-20

STRÁNSKÝ A PETRŽÍK

FOOT MOUNTING FOR CYLINDER

• DIN ISO 6432 SERIES MCMIS STAINLESS STEEL

Supply contains:
1 pc foot mounting
(stainless steel SUS304)

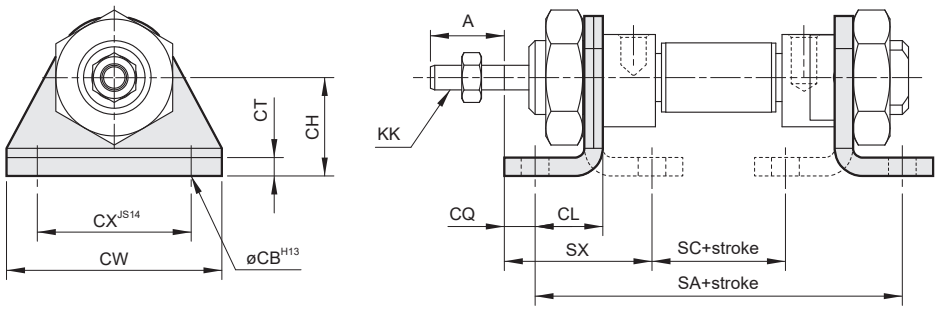

Piston ∅	A	CB	CH	CL	CQ	CT	CW	CX	KK	SA	SC	SX	ZC	Weight	Order codes
10	12	4,5	16	11	5	3	35	25	M4	68	30	24	74	0,02	PLB-M6-8
12	16	5,5	20	14	6	4	42	32	M6	76	28	32	88	0,04	PLB-M6-12
16	16	5,5	20	14	6	4	42	32	M6	81	33	32	93	0,04	PLB-M6-12
20	20	6,6	25	17	8	5	54	40	M8	101	43	36	111	0,10	PLB-M6-20
25	22	6,6	25	17	8	5	54	40	M10x1,25	102	44	40	118	0,10	PLB-M6-20

4

CLEVIS FOOT MOUNTING FOR CYLINDER

• DIN ISO 6432 SERIES MCMIS STAINLESS STEEL

Supply contains:
1 pc clevis
(stainless steel SUS304)
1 pc pivot pin (stainless steel)
2 pcs retaining ring

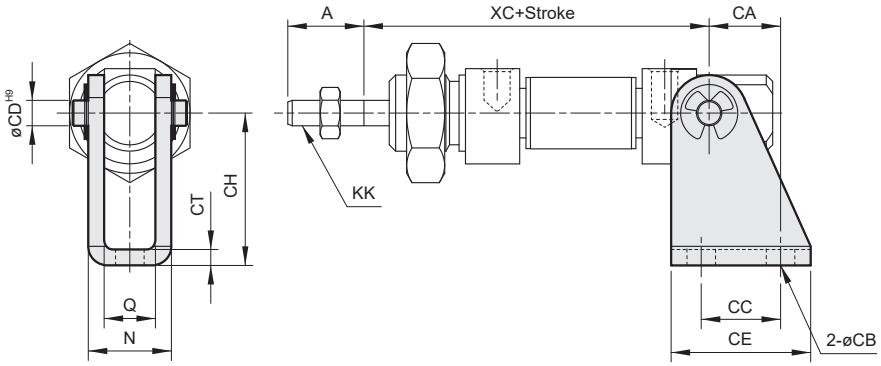

Piston ∅	A	CA	CB	CC	CD	CE	CH	CT	KK	N	Q	XC	Weight	Order codes
10	12	11,25	4,5	12,5	4	22	24	2,5	M4	13,1	8,1	64	0,02	PSDB-M6-8
12	16	13	5,5	15	6	25	27	3	M6	18,1	12,1	75	0,04	PSDB-M6-12
16	16	13	5,5	15	6	25	27	3	M6	18,1	12,1	82	0,04	PSDB-M6-12
20	20	16	6,5	20	8	32	30	4	M8	24,1	16,1	95	0,09	PSDB-M6-20
25	22	16	6,5	20	8	32	30	4	M10x1,25	24,1	16,1	104	0,09	PSDB-M6-20

FRONT/END CAP NUT

• DIN ISO 6432 SERIES MCMIS STAINLESS STEEL

Supply contains:
1 ks nut (stainless steel)

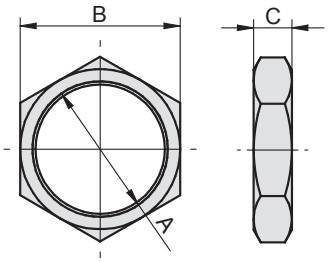

Piston ∅	A	B	C	Weight	Order codes
10	M12x1,25	19	7	0,037	PNUT-S-M12x1,25x7Hx19B
12 / 16	M16x1,5	24	8	0,043	PNUT-S-M16x1,5x8Hx24B
20 / 25	M22x1,5	27	8	0,079	PNUT-S-M22x1,5x8Hx27B

FOOT MOUNTING FOR CYLINDER
• PDSW

Supply contains:
1 pc foot mounting

Note: supply doesn't contain nut - it is included in supply of the cylinder (1 pc)

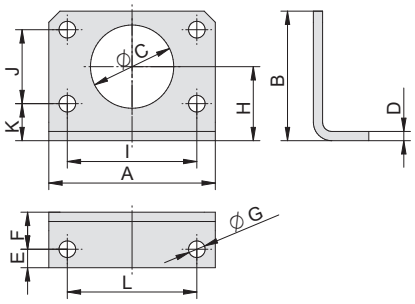

Piston ∅	A	B	C	D	E	F	G	H	I	J	K	L	Weight	Order codes
32	66	49	30	4	7	14	7	28	52	28	14	52	0.12	2113 2100 0032 0000
40	80	58	38	4	10	20	9	33	60	30	18	60	0.16	2113 2100 0040 0000
50	90	70	45	5	10	20	9	40	70	40	20	70	0.25	2113 2100 0050 0000
63	96	80	45	5	10	20	9	45	76	50	20	76	0.32	2113 2100 0063 0000

CLEVIS FOOT MOUNTING FOR CYLINDER
• PDSW

Supply contains:
1 pc clevis
2 pcs screws
2 pcs washers

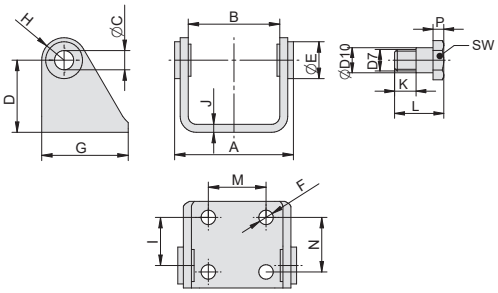

Piston ∅	A	B	C	D	E	F	G	H	I	J	M	N	L	SW	K	P	D10	D7	Weight	Order codes
32	50.1	38.1	10	35	15	7	40	12	20	4	20	24	17.5	13	6.5	4	10	M8x1	0.16	2113 3000 0032 0000
40	60.1	46.1	12	40	20	9	50	13	27	4	28	30	22	17	9	5	12	M10x1	0.25	2113 3000 0040 0000
50	74.1	57.1	14	45	23	9	54	14	30	5	36	34	27.5	19	12	6	14	M12x1.5	0.37	2113 3000 0050 0000
63	88.1	70.1	16	50	23	9	65	16	34	5	42	35	32	19	16	6	16	M14x1.5	0.51	2113 3000 0063 0000

PLUG BOLT FOR CYLINDER
• PDSW

Supply contains:
1 pc bolt
1 pc washer

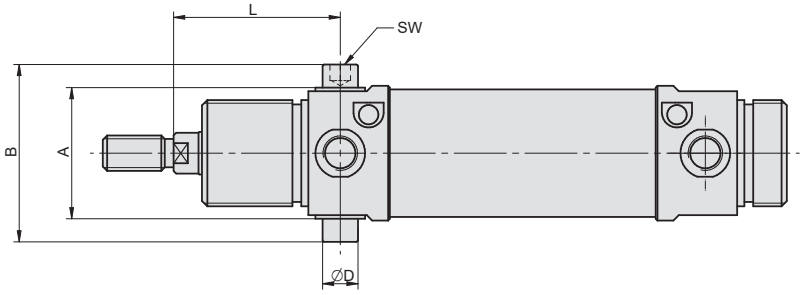

Piston ∅	A	B	D f7	L	SW	Weight	Order codes
32	37	50	10	47	5	0.010	2113 4200 0032 0000
40	45	60	12	57	6	0.013	2113 4200 0040 0000
50	56	74	14	62	6	0.020	2113 4200 0050 0000
63	69	89	16	63	8	0.028	2113 4200 0063 0000

PISTON ROD CLEVIS

FOR ANTI-CORROSIVE - HYGIENIC CLEAN CYLINDERS

Supply contains (material):
1 pc clevis (AISI 304)
1 pc pivot pin (AISI 304)
2 pcs retaining rings (A2)

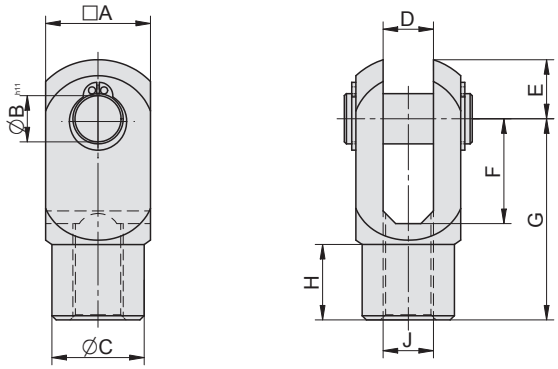

Piston ∅	A	B	C	D	E	F	G	H	J	Weight	Order codes
32	20	10	18	10	12	20	40	13	M10x1.25	0.09	2171 0100 0032 0000
40	24	12	22	12	14	24	48	13	M12x1.25	0.16	2171 0100 0040 0000
50 / 63	32	16	26	16	19	32	64	18	M16x1.5	0.31	2171 0100 0050 0000
80 / 100	40	20	32	20	25	40	80	22	M20x1.5	0.67	2171 0100 0080 0000

4

PISTON ROD EYE

FOR ANTI-CORROSIVE - HYGIENIC CLEAN CYLINDERS

Supply contains (material):
1 pc eye
(body: 1.4057, bearing ring: 1.4571 with PTFE foil, ball: 1.4401)

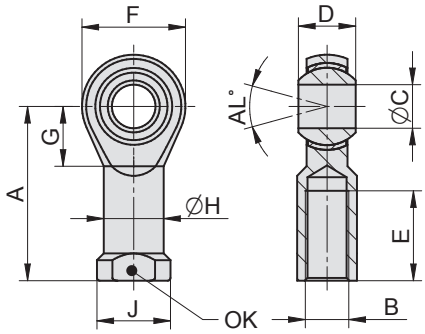

Piston ∅	A	B	C	D	E	F	G	H	J	OK	AL	Weight	Order codes
32	43	M10x1.25	10	14	20	28	15	15	19	17	10	0.076	2171 0200 0032 0000
40	50	M12x1.25	12	16	22	32	17	17.5	22	19	12	0.115	2171 0200 0040 0000
50 / 63	64	M16x1.5	16	21	28	42	22	22	27	22	14	0.230	2171 0200 0050 0000
80 / 100	77	M20x1.5	20	25	33	50	27	27.5	34	32	14	0.415	2171 0200 0080 0000

FOOT MOUNTING

FOR ANTI-CORROSIVE - HYGIENIC CLEAN CYLINDERS

Supply contains (material):
1 pc foot (AISI 304)
1 pc nut or 4 pcs screws
-according to foot type (A4)

Front foot mounting - for cylinder type 17101:

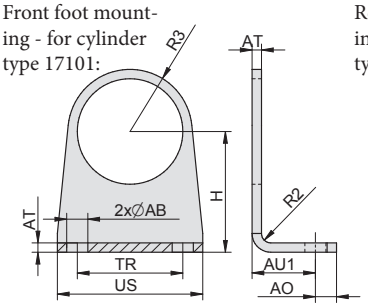

Rear foot mounting - for cylinder type 17601:

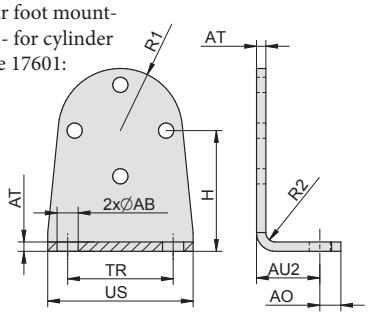

Piston ∅	AB	AO	AU1	AU2	AT	H	R1	R2	R3	TR	US	Weight	Order codes (front foot mounting for cyl. type 17101)	Order codes (rear foot mounting for cyl. type 17601)
32	7	9	28.5	20.5	3	33	17.5	3	17.5	32	45	0.075	2171 2100 0032 0000	2176 2100 0032 0000
40	9	9	32	22	3	38	21.5	3	21.5	36	52	0.09	2171 2100 0040 0000	2176 2100 0040 0000
50	9	9	36	27	4	47	26.5	4	25	45	62	0.17	2171 2100 0050 0000	2176 2100 0050 0000
63	9	9	36	26	4	52	33	4	27	50	72	0.23	2171 2100 0063 0000	2176 2100 0063 0000
80	12	15	38.5	35.5	5	65	42.5	5	31	63	90	0.45	2171 2100 0080 0000	2176 2100 0080 0000
100	12	15	38.5	35.5	5	75	50	5	40	83	110	0.64	2171 2100 0100 0000	2176 2100 0100 0000

FRONT/END CAP NUT
FOR ANTI-CORROSIVE - HYGIENIC CLEAN CYLINDERS

Supply contains (material):
1 pc nut (AISI 304)

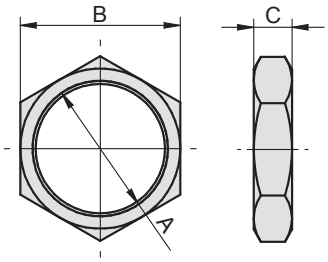

Piston ∅	A	B	C	Weight	Order codes
32	M30x1.5	36	10	0.037	2171 2400 0032 0000
40	M35x1.5	46	10	0.043	2171 2400 0040 0000
50 / 63	M42x1.5	50	12	0.079	2171 2400 0050 0000
80 / 100	M50x2	65	12	0.167	2171 2400 0080 0000

SWIVEL FLANGE WITH SPHERICAL BEARING
FOR ANTI-CORROSIVE - HYGIENIC CLEAN CYLINDERS

Supply contains (material):
1 pc flange (body: AISI 304, bearing ring: 1.4571 with PTFE foil, ball: 1.4401)
2 pcs screws (A4)

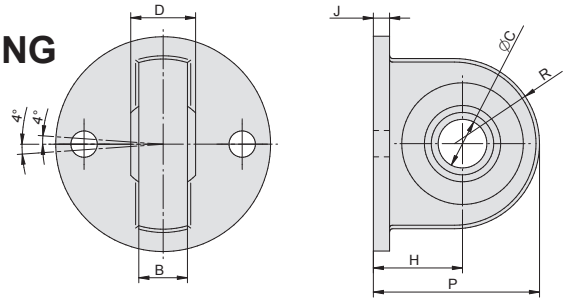

Piston ∅	B	C	D	H	J	P	R	Weight	Order codes
32	10.5	10	14	18.5	3.5	33.5	15	0.09	2176 3200 0032 0000
40	12	12	16	19	3.5	37	18	0.14	2176 3200 0040 0000
50	12	12	16	22	5	44	22	0.22	2176 3200 0050 0000
63	15	16	21	26	5	48	22	0.34	2176 3200 0063 0000
80	15	16	21	30.5	8	55.5	25	0.6	2176 3200 0080 0000
100	18	20	25	35	8	65	30	1.0	2176 3200 0100 0000

SWIVEL FLANGE
FOR ANTI-CORROSIVE - HYGIENIC CLEAN CYLINDERS

Supply contains (material):
1 pc flange (body: AISI 304, bushing: Tecaform AD)
2 pcs screws (A4)

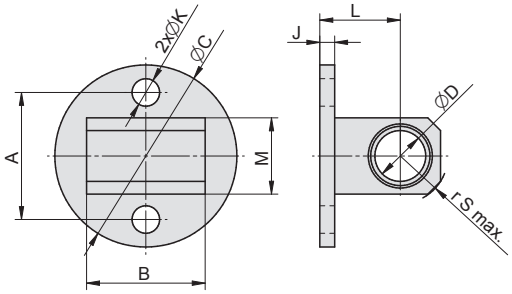

Piston ∅	A	B	C	D	J	K	L	M	r S max.	Weight	Order codes
32	25	26	34.6	10	3.5	5.5	18.5	15	10	0.076	2176 3300 0032 0000
40	30	28	43	12	3.5	6.5	19	18	12	0.10	2176 3300 0040 0000
50	39	32	53	12	5	6.5	22	20	12.5	0.18	2176 3300 0050 0000
63	49	40	64.5	16	5	8.5	26	28	18	0.35	2176 3300 0063 0000
80	64	50	84	16	8	11	30.5	32	20	0.70	2176 3300 0080 0000
100	82	60	104	18	8	11	35	35	20.5	1.05	2176 3300 0100 0000

NARROW SWIVEL FLANGE

FOR ANTI-CORROSIVE - HYGIENIC CLEAN CYLINDERS

Supply contains (material):
1 pc flange (AISI 304)
1 pc pivot pin (AISI 304)
2 pcs retaining rings (A2)

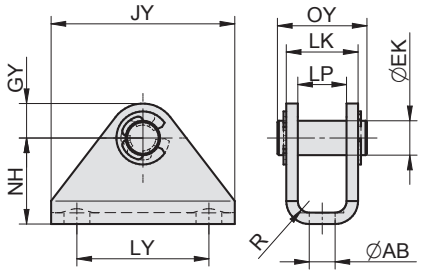

Piston ∅	AB	EK	GY	JY	LK	LP	LY	NH	OY	R	Weight	Order codes
32	7	10	9	45	21	15	30	24	26	3	0.08	2176 3400 0032 0000
40	9	12	10	55	23	17	38	27	29	3	0.09	2176 3400 0040 0000
50	9	12	10	64	25	17	46	30	31	4	0.18	2176 3400 0050 0000
63	12	16	13	79	30	22	58	36	36	4	0.27	2176 3400 0063 0000
80	14	16	13	94	32	22	70	40	38	5	0.41	2176 3400 0080 0000
100	14	20	15	112	36	26	88	45	42	5	0.47	2176 3400 0100 0000

FLANGE MOUNTING FOR CYLINDER
• SHORT STROKE

Supply contains:
1 pc flange mounting
4 pcs screws

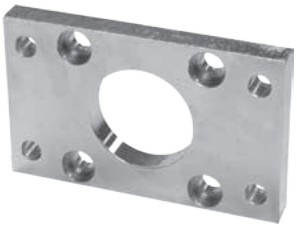

For piston dia. 20 and 25

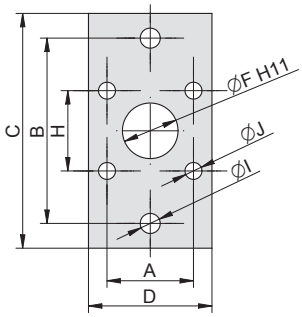

For piston dia. 32 to 100

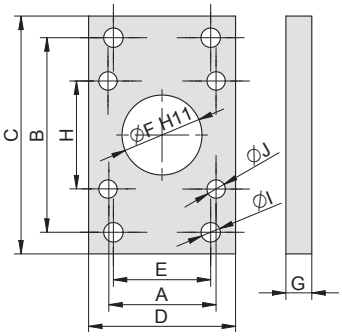

Piston ∅	A	B	C	D	E	F	G	H	I	J	Weight	Order codes
20	22	55	70	36	-	13	10	22	6.6	5.5	0.16	2125 2000 0020 0000
25	28	60	76	40	-	18	10	26	6.6	5.5	0.18	2125 2000 0025 0000
32	36	65	80	50	32	22	10	32	7	6.5	0.22	2125 2000 0032 0000
40	40	82	102	60	36	29	10	40	9	6.5	0.36	2125 2000 0040 0000
50	50	90	110	68	45	37	12	50	9	8.5	0.56	2125 2000 0050 0000
63	62	110	130	87	50	49	16	62	9	10.5	1.08	2125 2000 0063 0000
80	82	135	160	107	63	55	16	82	12	10.5	1.76	2125 2000 0080 0000
100	103	163	190	130	75	61	16	103	13	13	2.68	2125 2000 0100 0000

4

FOOT MOUNTING FOR CYLINDER
• SHORT STROKE

Supply contains:
1 pc foot mounting
2 pcs screws

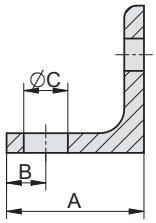

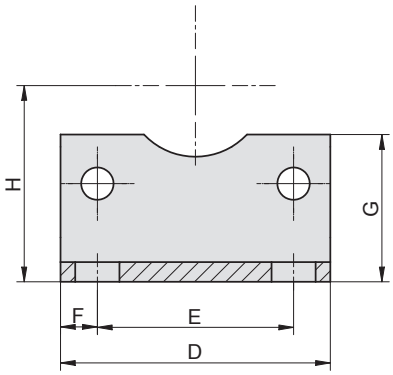

Piston ∅	A	B	C	D	E	F	G	H	Weight	Order codes
20	22	6	6.6	32	22	5	25	27	0.04	2125 2100 0020 0000
25	22	6	6.6	39	28	5.5	25	29	0.04	2125 2100 0025 0000
32	26	8	6.6	48	36	6	30	34	0.08	2125 2100 0032 0000
40	28	8	9	55	40	7.5	30	40	0.08	2125 2100 0040 0000
50	32	8	9	65	50	7.5	40	47	0.14	2125 2100 0050 0000
63	38	12	9	80	62	9	45	56	0.22	2125 2100 0063 0000
80	42	12	12	100	82	9	55	68	0.40	2125 2100 0080 0000
100	45	12	14	124	103	10.5	60	81	0.68	2125 2100 0100 0000

Valve properties and selection table 5-2

4/2, 5/2 and 5/3 function valves

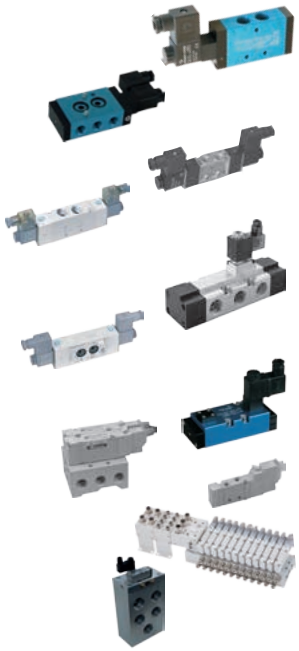

Series K 5-3
G1/8", G1/4", G3/8", G1/2"

Series K with NAMUR connection 5-6
G1/4", G3/8", NAMUR

Series MVSC 5-8
G1/4", G3/8", G1/2"

Series MVSE 5-10
G1/4", G3/8", G1/2"

Series MVSE 5-12
G1/2", G3/4", G1"

Series MVSN with NAMUR connection 5-14
G1/4", NAMUR

Series KI ISO 5599/1 Compact 5-16
ISO I , ISO II

Series MVSY 5-18
M5, G1/8", G1/4"

Fieldbus system series MVE 5-22
M5, G1/8", ø4, ø6, ø8

High flow valve series 5-24
G1", G1 1/2"

5

2/2 and 3/2 function valves

Series MVSC 5-26
G1/4", G3/8", G1/2"

Series NAF 5-28
G1/8", G1/4", G3/8", G1/2", G3/4", G1", G1 1/2"

Series MVDC 5-30
G1/8"

Series MBS 5-32
G1/8", G1/4"

Series MCS 5-33
G1/4", G3/8", G1/2"

Accessories

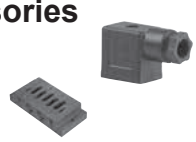

Connectors for solenoid actuated valves 5-34

Bases for series ISO 5599/1 5-35
Individual and manifold bases, end plates

5/2 a 5/3 function valves - valve properties and selection table

Series	Port size	Flow capacity [Nl/min]	Working pressure [MPa]**	Connection*			Voltage		Connector type	Page
				1*	2*	3*	DC [V]	AC [V]		
K1	G1/8“	1000	0.15 to 1.0 (2.1)	✓	×	✓	24	24, 110, 230	22	5-3
K2	G1/4“, G3/8“	1700	0.15 to 1.0 (2.1)	✓	×	✓	24	24, 110, 230	22	5-3
K2 NAMUR	G1/4“, G3/8“, NAMUR	1700	0,15 to 1,0 (2,1)	×	✓	×	24	24, 110, 230	22	5-6
K3	G1/2“	3500	0.15 to 1.0 (2.1)	✓	×	✓	24	24, 110, 230	22	5-3
MVSC	G1/4“,G3/8“,G1/2“	980 to 2730	0.2 to 0.8	✓	×	✓	12, 24	24, 110, 230	22	5-8
MVSE	G1/4“,G3/8“,G1/2“	980 to 2180	0.2 to 1.2	✓	×	✓	24	24, 110, 230	22	5-10
MVSE	G1/2“,G3/4“,G1“	3400 to 4830	0.2 to 0.7	✓	×	×	24	110, 230	DIN 43650 A	5-12
MVSN	G1/4”, NAMUR	1630 to 1905	0.2 to 0.8	×	✓	×	24	24, 230	22	5-14
MVSY	M5, G1/8“, G1/4“	200 to 760	0.15 to 0.7	✓	×	✓	6, 12, 24	230	special, with cable	5-18
KI ISO 1	ISO 1 - G1/4“	1200	0.15 to 1.0 (2.1)	×	✓	✓	24	24, 110, 230	22	5-16
KI ISO 2	ISO 2 - G3/8“	2800	0.15 to 1.0 (2.1)	×	✓	✓	24	24, 110, 230	22	5-16
High flow	G1“,G1 1/2“,	16000 to 28000	0.2 to 0.7	✓	×	×	24	24, 230	DIN 43650 A	5-24

*) Valve connection:
1 - in-line
2 - individual base
3 - manifold block

**) Working pressure may be higher / lower, when option coils and external pilot supply is used.

5

2/2 and 3/2 function valves - valve properties and selection table

Series	Port size	Flow capacity [Nl/min]	Working pressure [MPa]	Function			Voltage		Connector type	Page
				2/2	3/2 NC	3/2 NO	DC [V]	AC [V]		
MVDC	G1/8“	60	0.1 to 0.7	✓	✓	×	12, 24	24, 230	22	5-30
MBS	G1/8“, G1/4“	30 to 180	0 to 4.0	✓	×	×	12, 24	24, 230	22	5-32
MCS	G1/4“, G3/8“, G1/2“	120 to 530	0 to 4.0	✓	×	×	12, 24	24, 230	DIN 43650 A	5-33
MVSC	G1/4“, G3/8“, G1/2“	980 to 2730	0.2 to 0.8	×	✓	✓	12, 24	24, 230	22	5-26
NAF	G1/8“	580	0.15 to 1.0	×	✓	✓	12, 24	24, 110, 230	22	5-28
NAF	G1/4“, G3/8“	1100 / 1500	0.16 to 1.0	×	✓	✓	12, 24	24, 110, 230	22	5-28
NAF	G1/2“, G3/4“	5400 / 6500	0.2 to 1.0	✓	✓	✓	12, 24	24, 110, 230	DIN 43650 A	5-28
NAF	G1“	13500	0.22 to 1.0	✓	✓	✓	12, 24	24, 110, 230	DIN 43650 A	5-28
NAF	G1 1/2“	35000	0.25 to 1.0	✓	✓	✓	12, 24	24, 110, 230	DIN 43650 A	5-28

Solenoid actuated valves series K, KI and LV7 with spool and sleeve assembly

The spool and sleeve assembly is a matched set consisting of a stainless steel spool assembled into a stainless steel sleeve. The steel used is a 440C stainless hardened to 62 Rockwell „C“. Thanks to the precise grinding and honing of both parts the tolerance is such that air is entrained between the spool and sleeve forming an „airbearing“ effect which ensures safe, wear-free operation with extremely short cycles and low shift forces. At the same time reliability of the spool and sleeve assembly is maintained both for lubricated and non-lubricated air. Under both sets of conditions the spool moves with minimal friction leading to very low shifting forces enabling quick response.

The hardness of the spool and sleeve ensures no damage from pipe scale or other airline contaminants while the stainless steel construction combats any line moisture. these features will allow a typical service life in excess of 200 million cycles. The spool is balanced with respect to air pressure and coupled with the absence of wearing parts allows extreme versatility of valve applications. The air can flow in any direction at any pressure or vacuum. This unique design enables cylinder working strokes at one pressure while unloaded reverse strokes can be carried out economically at low pressures. Valves that contain a spool and sleeve assembly are marked with this symbol in the catalog:

SOLENOID ACTUATED VALVES SERIES K

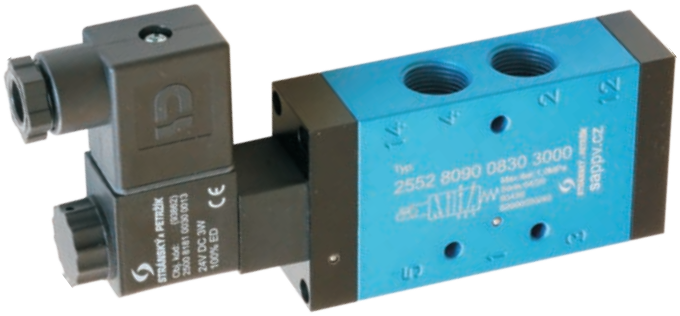

A new type of solenoid pilot actuated valve, which offers not only a large flow rate, high durability but also better availability. Valves can be used as standalone or they can be mounted on manifolds. They can replace L1 and L2 series valves because they have the same connection dimensions, unlike the L1/L2 series, the coil can be rotated in the desired direction. Connector and coil are included in delivery.

Valves series K contains spool and sleeve assembly, which guarantee long lifetime of valve.

Series	K1	K2		K3
Port	G1/8”	G1/4“	G3/8“	G1/2“
Connection of external pressure supply port	M5	M5	M5	G1/8“
Flow capacity [Nl/min]	1000	1700	1700	3500
Working pressure [MPa]	0.15 to 1.0 (vacuum to 2.1 when external pilot supply is used)			
Pilot pressure range [MPa]	0.15 to 1.0			
Power input [W/VA] (standard coils)	3W for DC voltage, 7.5 VA inrush and 5 VA hold for AC voltage			
Response time for DC voltage [ms]	10 energize, 35 de-energize			
Response time for AC voltage [ms]	7 energize, 35 de-energize			
Temperature range [°C]	medium temperature max. 50, ambient temperature -20 to +50			
Enclosure (standard coils)	IP65 with sealed and fastened connector			

Order codes

25 528090 06 30 3 000

Function		
52 80 90		5/2 monostable (with 1 coil)
52 80 80		5/2 bistable (with 2 coils)
53 80 80		5/3 with exhaust centre position
73 80 80		5/3 with pressure centre position (for series K1 and K2 only)

Port	
04	thread G1/8“ (for series K1 only)
06	thread G1/4“
08	thread G3/8“
10	thread G1/2“ (for series K3 only)

Voltage	
30	24 V DC ± 10%
40	24 V AC ± 10% 50-60 Hz
50	110 V AC ± 10% 50-60 Hz
60	230 V AC ± 10% 50-60 Hz
31	24 V DC ± 10% ATEX II 2G(D)*

*)See detailed specification of ATEX coil on the next page

Series	
2	K1 (thread G1/8“ only)
3	K2
4	K3 (thread G1/2“ only)

Supply contains connector(s).

For information about manifold assembly see page 5-5.

A special 5/3 valve design is available for the K2 series

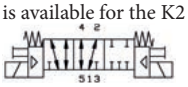

The order code is:
25 63 80 80 06 xx 3001, where xx is the coil voltage from the standard order code. The dimensions are identical to the function 538080.

For the K series, a version for ambient temperatures from -40 to +80°C is available. The connector connection to the coil complies with DIN 72585, used in the automotive industry.
More detailed information about this version can be found on our website
www.sappv.cz/r/e04e

Dimensions of valve series K

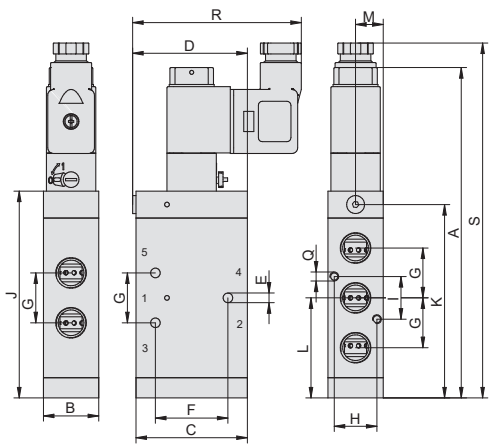

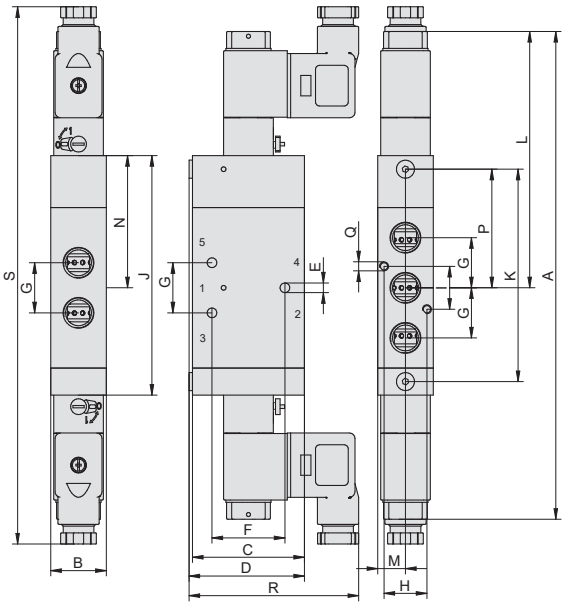

Series	Function	A	B	C	D	E	F	G	H	I	J	K	L	M	N	P	Q	R	S	Weight [kg]
K1	52 80 90	136	22	42	43.5	3.3	24.4	18	15.8	18	81	75	39	11	—	—	M3, deep 7	71	147	0.312
K1	52 80 80	204	22	42	43.5	3.3	24.4	18	15.8	18	94	82	107	11	52	46	M3, deep 7	71	226	0.420
K1	53 80 80	214	22	42	43.5	3.3	24.4	18	15.8	18	104	92	107	11	52	46	M3, deep 7	71	236	0.460
K1	73 80 80	214	22	42	43.5	3.3	24.4	18	15.8	18	104	92	107	11	52	46	M3, deep 7	71	236	0.460
K2	52 80 90	147	24.6	49.6	51.1	4.3	32.3	22.2	19	19	92.1	86.1	44.6	12.3	—	—	M4, deep 7	75	158	0.345
K2	52 80 80	216	24.6	49.6	51.1	4.3	32.3	22.2	19	19	106.1	94.1	113	12.3	58.6	52.6	M4, deep 7	75	238	0.430
K2	53 80 80	227	24.6	49.6	51.1	4.3	32.3	22.2	19	19	1171	105.1	113	12.3	58.6	52.6	M4, deep 7	75	249	0.479
K2	73 80 80	227	24.6	49.6	51.1	4.3	32.3	22.2	19	19	1171	105.1	113	12.3	58.6	52.6	M4, deep 7	75	249	0.479
K3	52 80 90	223	44	66	68.5	5.3	44	32	35	16	168	159.5	80	22	—	—	∅5.3	85	234	1.380
K3	52 80 80	268	44	66	68.5	5.3	44	32	35	16	176	159	143	22	88	79.5	∅5.3	85	308	1.441
K3	53 80 80	297	44	66	68.5	5.3	44	32	35	16	186	169	148	22	93	84.5	∅5.3	85	318	1.576

Notice: use fittings only to max. 19 mm wrench size with series K2.

5

Spare coils for valve series K

Standard coils type 22

Order code	Voltage	Coil type	Weight [kg]
2500 8181 0030 0013	24V DC	DIN 43650B	0.06
2500 8181 0040 0010	24V 50-60 Hz	DIN 43650B	0.06
2500 8181 0060 0009	230V 50-60 Hz	DIN 43650B	0.06
PMVSC220-COA110	110V 50-60 Hz	DIN 43650B	0.06

Notice: The connector is fastened with a M3 screw with a maximum torque of 0.4 to 0.6 Nm

Coil type 22 with ATEX Ex certification

Order code	Voltage	Cable length [m]	Weight [kg]
2500 8181 0030 0014	24V DC	5	0.46

Ex II 2G Ex mb IIC T5 Gb
Ex II 2D Ex tb IIIC T95°C Db IP66

U=24V DC ±10%
I=125 mA
P=3W
Ta=-20°C to +50°C

Conversion of internal to external air pilot supply

External air pilot supply is used, when air supply pressure is lower than 0.1 MPa (1 bar) as well as for vacuum and or if another medium than compressed air is used. It is necessary to change standard setting (when air pilot supply is drawn from valve supply port 1) in that cases.

When converting from internal to external pilot supply, please proceed as follows:
1) Dismount connector
2) Unscrew for M3 screws, remove valve lid with pilot valve, pay attention to the O-ring between the cover and the valve body
3) Remove the pin from the valve body and insert it into the hole with the O-ring in the lid, check if the O-rings fits correctly in the lid and put the lid back (tightening torque 1.5 Nm), insert and fasten the connector
4) Unscrew plug on side of valve and connect modified compressed air with pressure 0.1 to 1.0 MPa

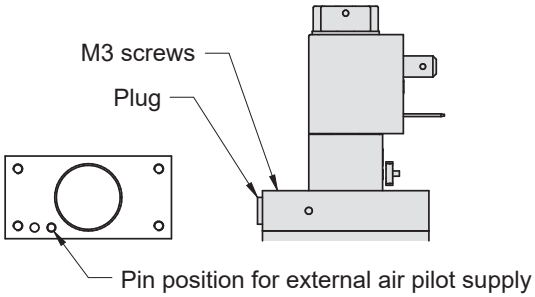

Series K valves manifold assembly

Manifolds for K series valves are supplied separately and it is necessary to use one pair of end plates, which are also used as manifolds for 2 valves, and requested number of middle plates (1 plate for 1 valve) to create the complete manifold assembly. It is possible to add other positions to the assembly at any time, just remove the end plate and add additional middle plates. If it is necessary to create a reserve during assembly, it is recommended to use a blank station plate, which can be easily replaced by valve. Max. number of valves in one manifold is 10. Any valve series K may be used for manifold assembly (it doesn't matter if valve is single or double solenoid actuated or air actuated). But it is necessary to use adaptor, which must be mounted between valve and manifold. Valves mounted on manifold could be unmounted separately by unscrew of 2 bolts, which are accessible from top side (side with ports 2 and 4 of valves).

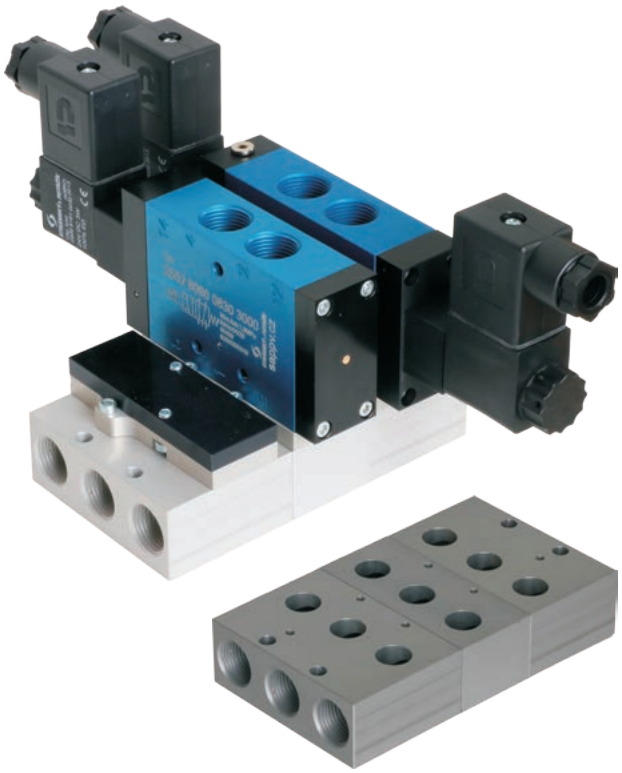

Series	Order code	Weight [kg]	Application
K1	2500 8181 0600 0003	0.26	End plates (1 pair) for 2 valves
K1	2500 8181 0600 0002	0.08	Middle plate (extension for 1 valve)
K1	2500 8181 0600 0001	0.02	Adaptor plate (1 plate per station)
K1	2500 8181 0600 0004	0.05	Blank station plate
K2	2500 8181 0800 0001	0.29	End plates (1 pair) for 2 valves
K2	2500 8181 0800 0002	0.11	Middle plate (extension for 1 valve)
K2	2500 8181 0800 0003	0.04	Adaptor plate (1 plate per station)
K2	2500 8181 0800 0005	0.07	Blank station plate

Adaptor plate for mounting the valve on the manifold (1 plate per station)

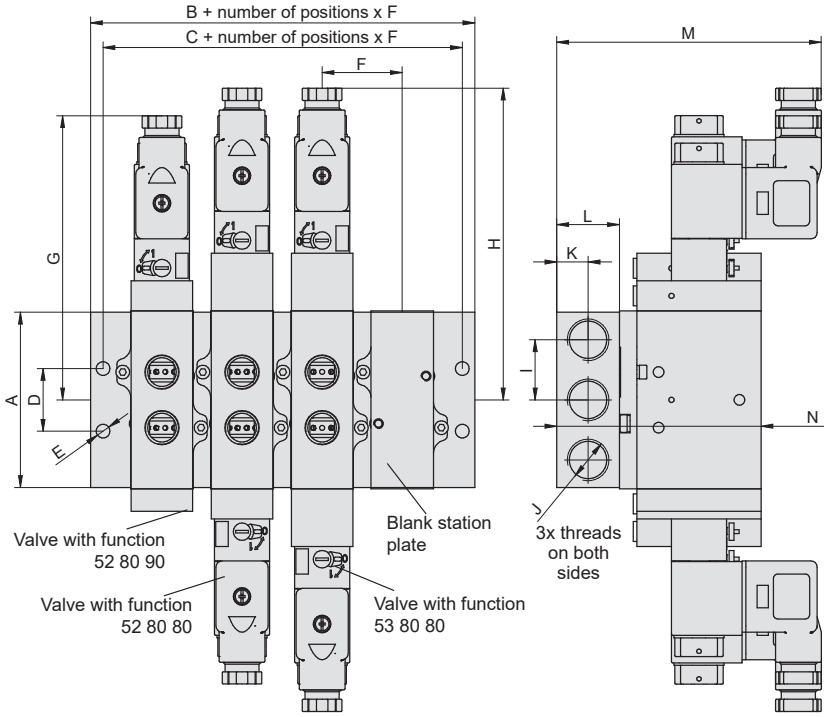

Series	A	B	C	D	E	F	G	H	I	J	K	L	M	N
K1	59	26.5	16.5	21	5.5	30.5	108	118	21	G1/4"	12.5	25	100	72.5
K2	69	25.5	15.5	25	5.5	32	113.5	124.5	24	G3/8"	12.5	25	106	82

Assembly procedure:

1) On the middle plate, check that the sealing rings in the recesses are seated correctly. Place the middle plate on the end plate pins and secure with two countersunk screws.
2) Repeat the procedure with the other middle plates.
3) On the other end plate, check that the sealing rings are seated correctly in the recesses. Place the end plate on the pins of the middle plate and secure with two countersunk screws.
4) Mount the adapter on the inlet and exhaust side (ports 1,3,5) on the valve using two M4x10 screws. Make sure that the sealing rings are fitted correctly in the recesses.
5) Mount the valve with the adapter using two M3x12 screws in the required position on the manifold. Make sure that the sealing rings are fitted correctly in the recesses.
6) Fasten the manifold with valves with all four holes øE.

For more information about assembly see sappv.cz/r/e05e

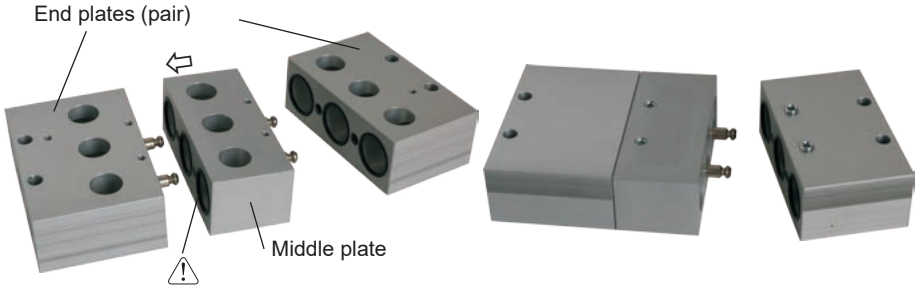

SOLENOID ACTUATED VALVES SERIES K WITH NAMUR CONNECTION

STRÁNSKÝ A PETRŽÍK

A range of indirectly operated valves with NAMUR connection (according to VDI/VDE 3845), based on our popular K-series valves. Available in 5/2 versions with one or two coils and 5/3 with a central position that is both vented and pressurized. A 3/2 version can be created using an adapter that is ordered separately. Using a connection plate, the valve can then be mounted directly on the cylinder inlet. A connector, sealings and screws are also included.

Valves series K contains spool and sleeve assembly, which guarantee long lifetime of valve.

Series	K2 NAMUR	
Port	G1/4" (NAMUR for outlets 2 and 4)	G3/8" (NAMUR for outlets 2 and 4)
Connection of external pressure supply port	M5	M5
Flow capacity [Nl/min]	1700	1700
Working pressure [MPa]	0,15 to 1,0 (vacuum to 2,1 when external pilot supply is used)	
Pilot pressure range [MPa]	0,15 to 1,0	
Power input [W/VA] (standard coils)	3W for DC voltage, 7,5 VA inrush and 5 VA hold for AC voltage	
Response time for DC voltage [ms]	10 energize, 35 de-energize	
Response time for AC voltage [ms]	7 energize, 35 de-energize	
Temperature range [°C]	medium temperature max. 50, ambient temperature -20 to +50	
Enclosure (standard coils)	IP65 with sealed and fastened connector	

Order codes

25 528090 06 30 A 000

Function		
52 80 90		5/2 monostable (with 1 coil)
52 80 80		5/2 bistable (with 2 coils)
53 80 80		5/3 with exhaust centre position
73 80 80		5/3 with pressure centre position

Port	
06	thread G1/4"
08	thread G3/8"

Voltage	
30	24 V DC ± 10%
40	24 V AC ± 10% 50-60 Hz
50	110 V AC ± 10% 50-60 Hz
60	230 V AC ± 10% 50-60 Hz
31	24 V DC ± 10% ATEX II 2G(D)*

*)See detailed specification of ATEX coil on the next page

Series	
A	K2 NAMUR

Supply contains connector(s).

Spare coils - see page 5-4.

Accessories

Description		Order codes
Adapter for making of 3/2 function (from function 52 80 90)		PMVSN300-A-K
Connection plate for mounting the valve on cylinder inlet	G1/8"	2101 8100 0032 0000
	G1/4"	2101 8100 0040 0000
	G3/8"	2101 8100 0063 0000
	G1/2"	2101 8100 0100 0000

Adapter for making of 3/2 function (from function 52 80 90)

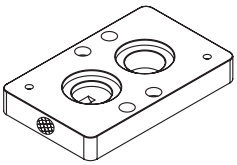

By mounting this adapter on a valve with one coil (function 52 80 90), a valve with a NAMUR connection with a 3/2 design is created. If the adapter is mounted on the valve with the silencer facing the coil, the valve will be normally open; if the adapter is mounted with the silencer facing away from the coil, the valve will be normally closed.

Dimensions of valve series K with NAMUR connection

5/2 monostable:

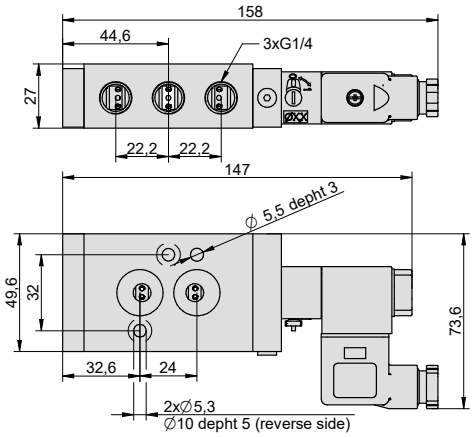

5/3:

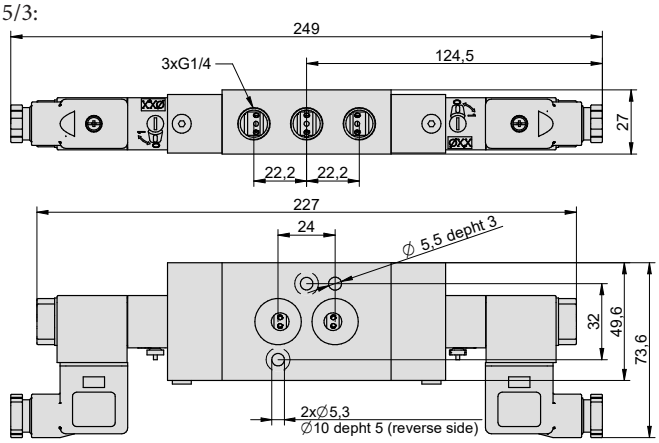

5/2 bistable:

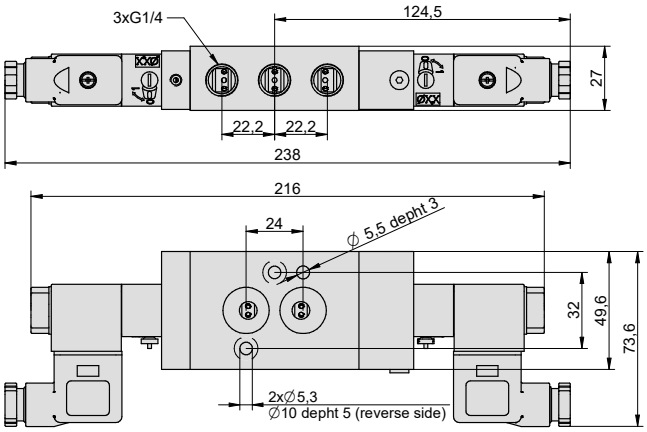

Adapter for making of 3/2 function (from function 52 80 90)

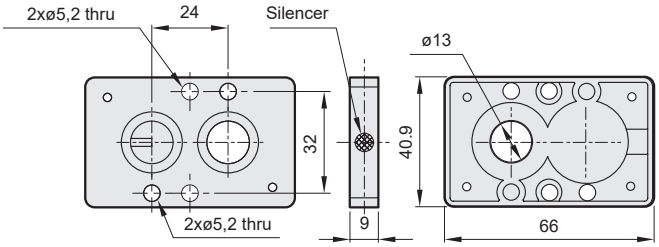

Connection plate for mounting the valve on cylinder inlet:

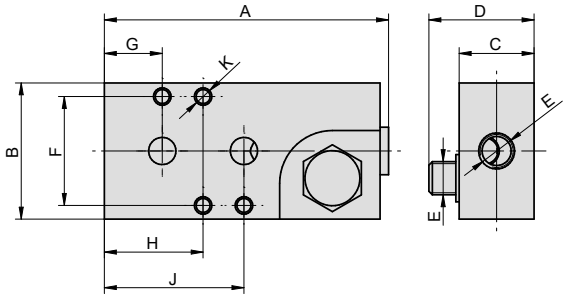

Thread E	A	B	C	D	F	G	H	J	K
G1/8“	83	40	22	31	32	17	29	41	M5 depth 10
G1/4“	83	40	22	33,5	32	17	29	41	M5 depth 10
G3/8“	90	49	28	41,5	32	18	30	42	M5 depth 10
G1/2“	90	59	30	45,5	32	19	31	43	M5 depth 10

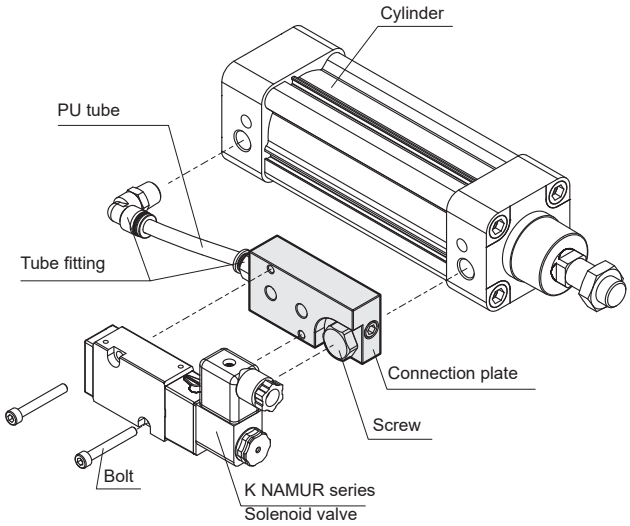

SOLENOID ACTUATED VALVES SERIES MVSC

STRÁNSKÝ A PETRŽÍK

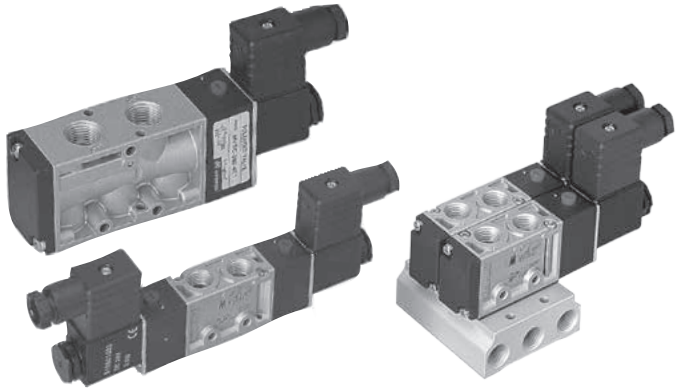

The popular valve series, which replaces valves series L and J. The basic usable features are kept and brings some improvements such as lower wattage, comparable or bigger flow capacity and better accessibility. Valves are solenoid pilot actuated. The product range covers functions 5/2 single or double solenoid and 5/3 with centre closed and exhaust position and position with pressure centre. Connector and coil are included in delivery.

This valve series contains rubber gaskets.

Series	MVSC 220	MVSC 300	MVSC 460
Ports	G1/4“ (G1/8“ for exhaust port 3 and 5)	G3/8“	G1/2“
Flow capacity [Nl/min]	980, or 860 for function 5/3	1905, or 1355 for function 5/3	2730, or 1630 for function 5/3
Working pressure [MPa]	0.2 to 0.8, or 0.3 to 0.8 for function 5/3		
Power input [W, VA]	2W for DC voltage, 6/4.9VA for AC voltage (inrush/hold)		
Response time [ms]	30, or 40 for function 5/3	50	50
Coil voltage tolerance	±10%		
Temperature range [°C]	ambient temperature -5 to +50		
Enclosure	IP65 with sealed and fastened connector		

5

Order codes

PMVSC 220 4E2C A220

Size	
220	series MVSC 220, thread G1/4“
300	series MVSC 300, thread G3/8“
460	series MVSC 460, thread G1/2“

Function		
4E1	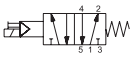	5/2 monostable (with 1 coil)
4E2	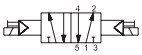	5/2 bistable (with 2 coils)
4E2C	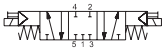	5/3 with closed centre position
4E2C	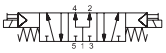	5/3 with pressure centre position
4E2C	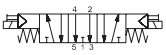	5/3 with exhaust centre position

Voltage	
D12	12 V DC ± 10%
D24	24 V DC ± 10%
A24	24 V AC ± 10%, 50-60 Hz
A110	110 V AC ± 10%, 50-60 Hz
A220	230 V AC ± 10%, 50-60 Hz

Supply contains connector(s).

Order codes of manifolds

PMVSC 220 - 5B 4

Size	
220	series MVSC and MVAA 220, thread G1/4“
300	series MVSC 300, thread G3/8“
460	series MVSC and MVAA 460, thread G1/2“

Number of positions	
2 to 10	for 2 to 10 valves

It is possible to mount series MVSC and MVAA valves on manifold with predefined number of position. It isn't possible to add another position to created assembly - it could be necessary to replace manifold or create another manifold. If there is possibility that more valves will be needed in future, we recommend to use manifold with more positions and use blocking plates for unused positions. Valves are mounted to manifold directly - no adaptor is necessary. Valves mounted on manifold could be unmounted separately by unscrew of 2 bolts, which are accessible from top side (side with ports 2 and 4 of valves). Each separate coil must be wired with separate electrical cable.

Manifolds with internal wiring and common 25-pin SUB-D connector are also available. These manifolds are for valves series 220, 300 and 460. Number of stations is 2 to 12 as standard, maximum is 20. Voltage of coils is 24V DC. For more information about these manifolds, please contact our technical department.

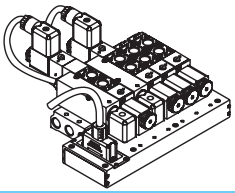

Order codes for blank station plates:

Series	Order codes
220	PMVSC 220 -5P
300	PMVSC 300 -5P
460	PMVSC 460 -5P

Dimensions of valve series MVSC

Type 5/2 with single solenoid:

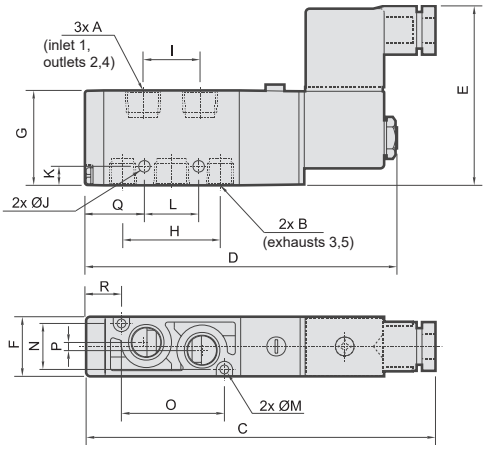

Type 5/2 and 5/3 with double solenoid:

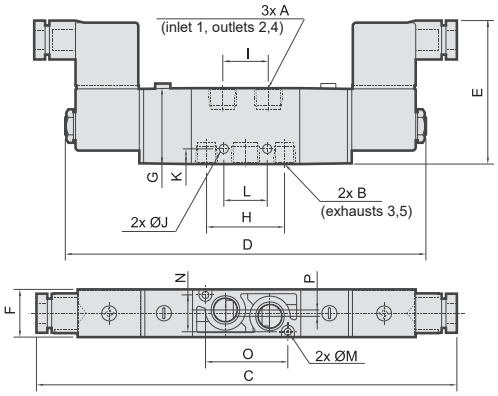

Series	Function	A	B	C	D	E	F	G	H	I	J	K	L	M	N	O	P	Q	R	Weight [kg]
220	4E1	G1/4“	G1/8“	132	118.5	67	22.3	35	36	21	4.2	7	20	3.2	17	38	3	22	13	0.20
	4E2	G1/4“	G1/8“	200	173	67	22.3	35	36	21	4.2	7	20	3.2	17	38	3	—	—	0.29
	4E2C/P/R	G1/4“	G1/8“	221	194	67	22.3	35	36	21	4.2	7	20	3.2	17	38	3	—	—	0.34
300	4E1	G3/8“	G3/8“	159	145.5	73	30	46.4	52	30	5.5	4.7	26	4.5	23	13	0	32	38.5	0.29
	4E2	G3/8“	G3/8“	228	201	73	30	46.4	52	30	5.5	4.7	26	4.5	23	13	0	—	—	0.39
	4E2C/P/R	G3/8“	G3/8“	247.5	220.5	73	30	46.4	52	30	5.5	4.7	26	4.5	23	13	0	—	—	0.53
460	4E1	G1/2“	G1/2“	170	157	73	30	46.4	58	28	4.5	7	29	4.2	23	72	4.5	36.5	15	0.33
	4E2	G1/2“	G1/2“	238	212	73	30	46.4	58	28	4.5	7	29	4.2	23	72	4.5	—	—	0.45
	4E2C/P/R	G1/2“	G1/2“	257.5	231.5	73	30	46.4	58	28	4.5	7	29	4.2	23	72	4.5	—	—	0.55

5

Dimensions of manifold assemblies of valves series MVSC a MVAA

Series	Value	Number of positions								
		2	3	4	5	6	7	8	9	10
220	L	69	92	115	138	161	184	207	230	253
	M	57	80	103	126	149	172	195	218	241
	Weight[kg]	0.20	0.26	0.32	0.38	0.46	0.52	0.60	0.62	0.68
300	L	81	112	143	174	205	236	267	298	329
	M	71	102	133	164	195	226	257	288	319
	Weight [kg]	0.25	0.35	0.44	0.54	0.64	0.74	0.83	0.84	0.92
460	L	81	112	143	174	205	236	267	298	329
	M	71	102	133	164	195	226	257	288	319
	Weight [kg]	0.39	0.53	0.68	0.82	0.97	1.11	1.26	1.40	1.55

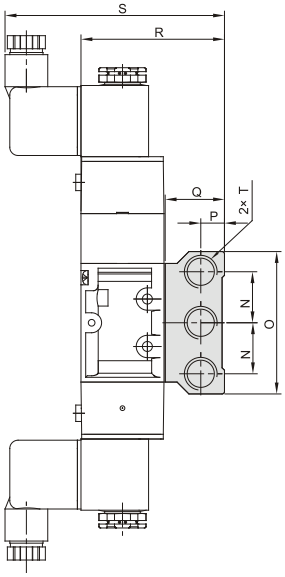

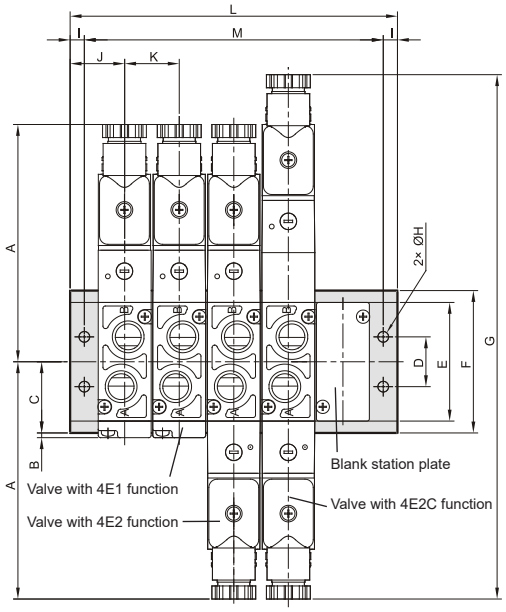

Spare coils for series 220/300/460

Order codes	Voltage	Power input
PMVSC220-COD12	12V DC	3.1 W
PMVSC220-COD24	24V DC	2.5 W
PMVSC220-COA24	24V 50-60 Hz	5.8 VA
PMVSC220-COA110	110V 50-60 Hz	4.9 VA
PMVSC220-COA220	230V 50-60 Hz	5.0 VA

Series	A	B	C	D	E	F	G	H	I	J	K	N	O	P	Q	R	S	T
220	100	2	30	21	50	60	221	4.5	6	23	23	21.5	60	10	25	60.5	92.5	G1/4“
300	114	3	42	30	74	84	281.4	4.5	5	25	31	30.5	84	12	27	73.9	100.2	G3/8“
460	119	3	48	30	86	96	291.4	4.5	5	25	31	29	96	13	30	76.9	103	G1/2“

SOLENOID ACTUATED VALVES SERIES MVSE

STRÁNSKÝ A PETRŽÍK

This valve series that complement favorite MVSC series with their parameters, over which they can handle up to 1.2 MPa. Other parameters, such as power consumption and flow, are the same or similar. The MVSE series is indirectly controlled. All 5/2 with one or two coils and 5/3 with medium closed, ventilated and under pressure (5/3 not available for MVSE-500) are available. The valves can be used directly or can be mounted on a manifold.

This valve series contains rubber gaskets.

Series	MVSE 260	MVSE 300	MVSE 500
Ports	G1/4“ (G1/8“ for exhaust port 3 and 5)	G3/8“	G1/2“
Flow capacity [Nl/min]	980, or 860 for function 5/3	1905	2180
Working pressure [MPa]	0.2 to 1.2 or 0.3 to 1.2 for function 5/3		
Power input [W, VA]	2.0W for DC voltage, 6/4.9VA for AC voltage (inrush/hold)		
Response time [ms]	40, or 35 for function 5/3	50	50
Coil voltage tolerance	±10%		
Temperature range [°C]	ambient temperature -5 to +50		
Enclosure	IP65 with sealed and fastened connector		

5

Order codes

PMVSE 300 4E2C A220

Size	
260	series MVSE 260, thread G1/4“
300	series MVSE 300, thread G3/8“
500	series MVSE 500, thread G1/2“

Function		
4E1	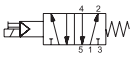	5/2 monostable (with 1 coil)
4E2	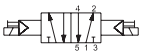	5/2 bistable (with 2 coils)
4E2C*	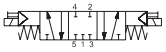	5/3 with closed centre position
4E2C*	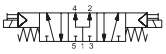	5/3 with pressure centre position
4E2C*	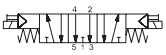	5/3 with exhaust centre position

*) Not for MVSE-500

Voltage	
D24	24 V DC ± 10%
A24	24 V AC ± 10%, 50-60 Hz
A110	110 V AC ± 10%, 50-60 Hz
A220	230 V AC ± 10%, 50-60 Hz

Supply contains connector(s).

Order codes of manifolds

PMVSE 260 - 5B 4

Size	
260	series MVSE 260, thread G1/4“
300	series MVSE 300, thread G3/8“
500	series MVSE 500, thread G1/2“

Number of positions	
2 to 10	for 2 to 10 valves

Order codes for blank station plates:

Series	Order codes
260	PMVSE 260 -5P
300	PMVSE 300 -5P
500	PMVSE 500 -5P

It is possible to mount series MVSE valves on manifold with predefined number of position. It isn't possible to add another position to created assembly - it could be necessary to replace manifold or create another manifold. If there is possibility that more valves will be needed in future, we recommend to use manifold with more positions and use blocking plates for unused positions. Valves are mounted to manifold directly - no adaptor is necessary. Valves mounted on manifold could be unmounted separately by unscrew of 2 bolts, which are accessible from top side (side with ports 2 and 4 of valves). Each separate coil must be wired with separate electrical cable.

Dimensions of valve series MVSE

Type 5/2 with single solenoid:

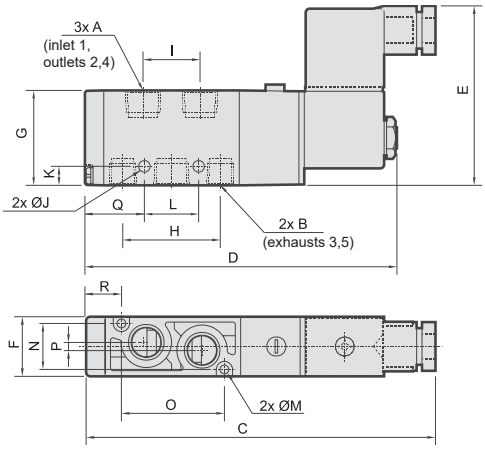

Type 5/2 and 5/3 with double solenoid:

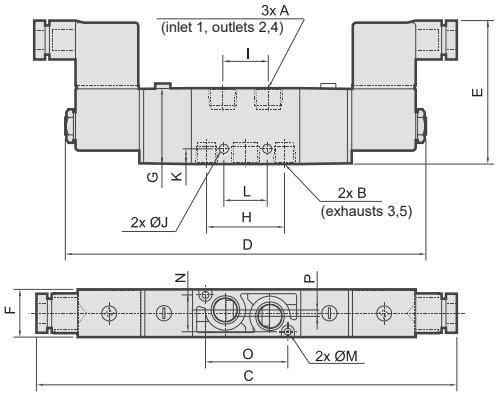

Series	Function	A	B	C	D	E	F	G	H	I	J	K	L	M	N	O	P	Q	R	Weight [kg]
260	4E1	G1/4“	G1/8“	131.5	118	66	26.4	35.3	37	21	4.2	7	20	4.2	21	10	0	21.5	26.5	0.26
	4E2	G1/4“	G1/8“	200	173	66	26.4	35.3	37	21	4.2	7	20	4.2	21	10	0	—	—	0.35
	4E2C/P/R	G1/4“	G1/8“	216	189	66	26.4	35.3	37	21	4.2	7	20	4.2	21	10	0	—	—	0.41
300	4E1	G3/8“	G3/8“	156.5	145.5	72	30	46.4	52	30	4.5	4.7	26	3.2	25	60	0	32	15	0.41
	4E2	G3/8“	G3/8“	223	201	72	30	46.4	52	30	4.5	4.7	26	3.2	25	60	0	—	—	0.51
	4E2C/P/R	G3/8“	G3/8“	242.2	220	72	30	46.4	52	30	4.5	4.7	26	3.2	25	60	0	—	—	0.58
500	4E1	G1/2“	G1/2“	168.5	157.5	73	30	50	58	27	4.5	8.8	29	4.2	23	72	4.5	36.5	15	0.45
	4E2	G1/2“	G1/2“	235	213	73	30	50	58	27	4.5	8.8	29	4.2	23	72	4.5	—	—	0.55

5

Dimensions of manifold assemblies of valves series MVSE

Series	Value	Number of positions								
		2	3	4	5	6	7	8	9	10
260	L	74	101	128	155	182	209	236	263	290
	M	64	91	118	145	172	199	226	253	280
	Weight[kg]	0.22	0.30	0.39	0.47	0.55	0.63	0.72	0.80	0.88
300	L	81	112	143	174	205	236	267	298	329
	M	71	102	133	164	195	226	257	288	319
	Weight [kg]	0.24	0.33	0.42	0.51	0.60	0.68	0.76	0.84	0.93
500	L	81	112	143	174	205	236	267	298	329
	M	71	102	133	164	195	226	257	288	319
	Weight [kg]									

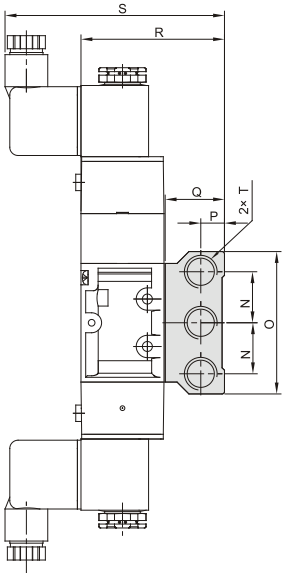

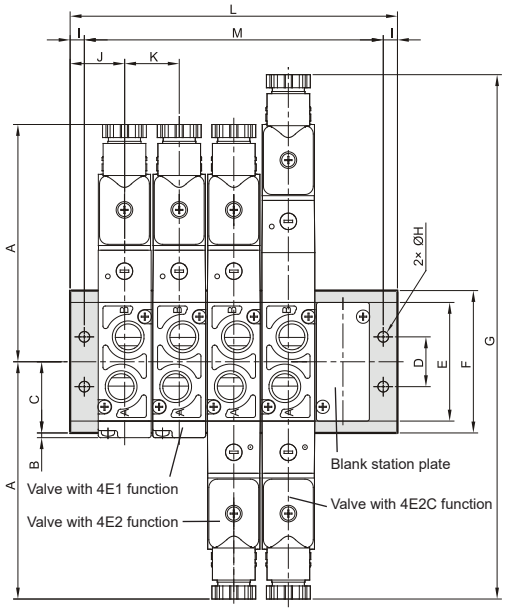

Spare coils for series 260/300/500

Order codes	Voltage	Power input
PMVSE260-COD24	24V DC	2.0 W
PMVSE260-COA24	24V 50-60 Hz	5.4 VA
PMVSE260-COA110	110V 50-60 Hz	4,4 VA
PMVSE260-COA220	230V 50-60 Hz	4.9 VA

Series	A	B	C	D	E	F	G	H	I	J	K	N	O	P	Q	R	S	T
260	100	1.5	30	21	50	60	216	4.5	5	23.5	27	21.5	60	10	25	60.3	90.7	G1/4“
300	111.5	3	42	30	74	84	242.2	4.5	5	25	31	30.5	84	12	27	73.9	98.7	G3/8“
500	117.5	3	48	30	86	96	—	4.5	5	25	31	30	96	13	30	80	103	G1/2“

SOLENOID ACTUATED VALVES SERIES MVSE

STRÁNSKÝ A PETRŽÍK

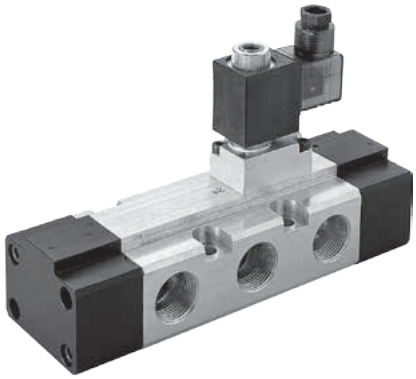

The new valve series, which continues with parameters the series MVSC. They are suitable for large diameter cylinders actuating. Valves series MVSE are solenoid pilot actuated. The product range covers functions 5/2 single or double solenoid. Connector and coil are included in delivery.

This valve series contains rubber gaskets.

Series	MVSE 510	MVSE 600	MVSE 600
Ports	G1/2“	G3/4“	G1“
Flow capacity [Nl/min]	3400	4600	4800
Working pressure [MPa]	0.2 to 0.7		
Power input [W, VA]	10W for DC voltage, 13/11VA for AC voltage (inrush/hold)		
Response time [ms]	60	80	80
Coil voltage tolerance	±10%		
Temperature range [°C]	ambient temperature -5 to +50		
Enclosure	IP65 with sealed and fastened connector		

5

Order codes

PMVSE 600 42 20 D24

Size	
510	series MVSE 510
600	series MVSE 600

Function	
41	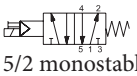 5/2 monostable (with 1 coil)
42	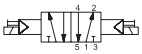 5/2 bistable (with 2 coils)

Thread	
15	G1/2“ for series 510
20	G3/4“ for series 600
25	G1“ for series 600

Voltage	
D24	24 V DC ± 10%
A110	110 V AC ± 10%, 50-60 Hz
A220	230 V AC ± 10%, 50-60 Hz

Supply contains connector(s).

Dimensions of valve series MVSE

Type 5/2 with single solenoid:

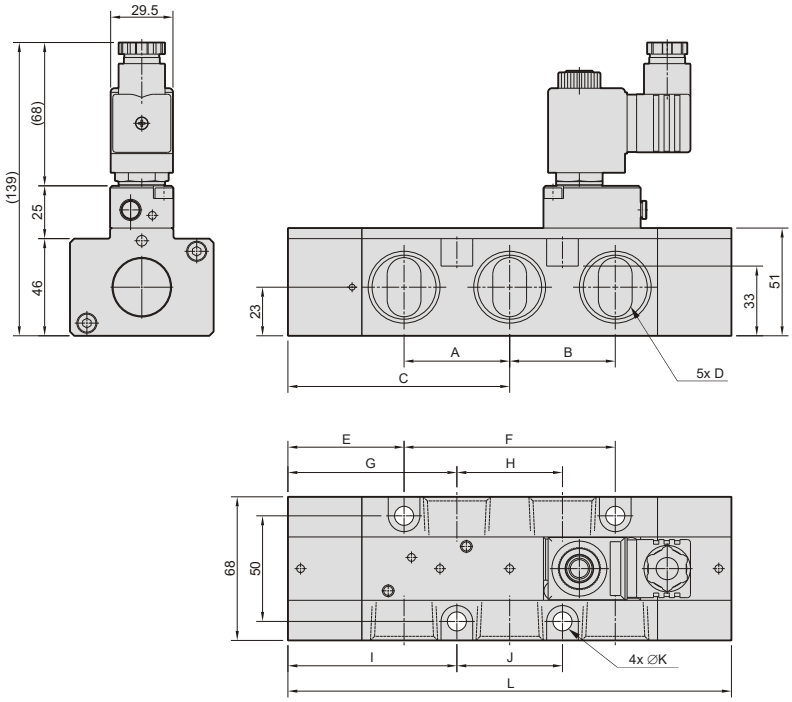

Type 5/2 with double solenoid:

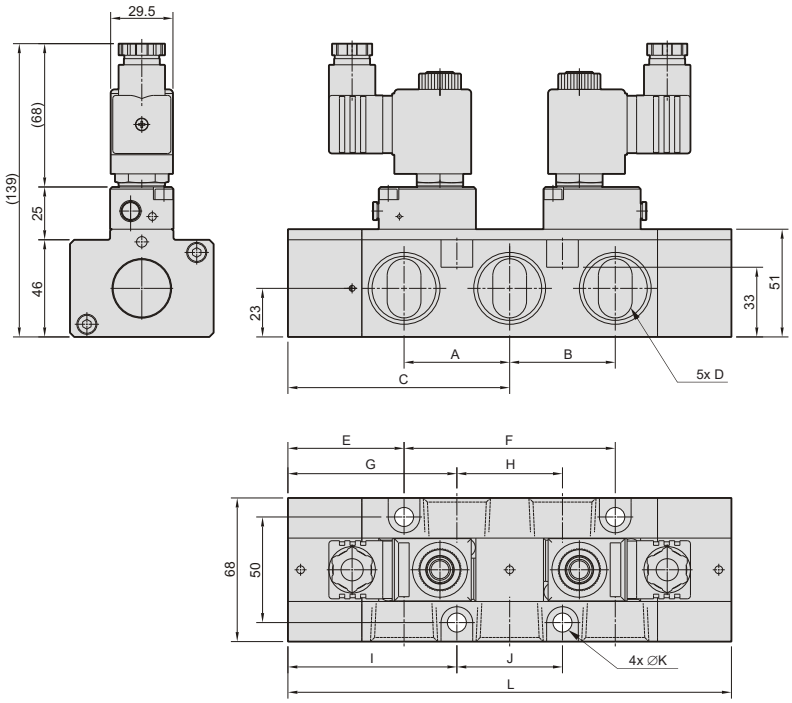

Series	Function	A	B	C	D	E	F	G	H	I	J	K	L	Weight [kg]
510	41	32	32	77.5	G1/2“	45.5	64	61.5	32	61.5	32	9	155	1.52
	42	32	32	77.5	G1/2“	45.5	64	61.5	32	61.5	32	9	155	1.81
600	41	50	50	105	G3/4“ or G1“	55	100	80	50	80	50	9	210	1.82
	42	50	50	105	G3/4“ or G1“	55	100	80	50	80	50	9	210	2.10

Spare coils for series 510/600

Order codes	Voltage
PMVSE510-COD24	24V DC
PMVSE510-COA110	110V 50-60 Hz
PMVSE510-COA220	230V 50-60 Hz

SOLENOID ACTUATED VALVES SERIES MVSN WITH NAMUR CONNECTION

STRÁNSKÝ A PETRŽÍK

Valve series with connection according to NAMUR (VDI / VDE 3845) The MVSN series is indirectly controlled. All 5/2 with one or two coils and 5/3 with medium closed, ventilated and under pressure are available. Version 3/2 can be made using an adapter that is ordered separately. Using the connection plate, the valve can be mounted directly on the cylinder inlet. A connector is also included.

This valve series contains rubber gaskets.

Series	MVSN 300
Ports	G1/4“ (NAMUR for outlets 2 and 4)
Flow capacity [Nl/min]	1905, or 1630 for function 5/3
Working pressure [MPa]	0.2 to 0.8 or 0.3 to 0.8 for function 5/3
Power input [W, VA]	2W for DC voltage, 6/4.9VA (230V) or 4.8/4.4 (24V) for AC voltage (inrush/hold)
Response time [ms]	50
Coil voltage tolerance	±10%
Temperature range [°C]	ambient temperature -5 to +50
Enclosure	IP65 with sealed and fastened connector
Weight [kg]	0.42 for 5/2 1 coil, 0.51 for 5/2 2 coils, 0.76 for 5/3

Order codes

PMVSN 300 4E2C A220

Size	
300	series MVSN 300, thread G1/4“ and NAMUR

Function		
4E1	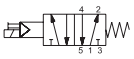	5/2 monostable (with 1 coil)
4E2	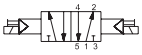	5/2 bistable (with 2 coils)
4E2C	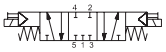	5/3 with closed centre position
4E2C	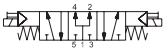	5/3 with pressure centre position
4E2C	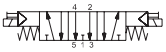	5/3 with exhaust centre position

Voltage	
D24	24 V DC ± 10%
A220	230 V AC ± 10%, 50-60 Hz
A24	24 V AC ± 10%, 50-60 Hz

Supply contains connector(s).

Accessories

Description	Order codes
Adapter for making of 3/2 function (from 4E1)	PMVSN 300 -A
Connection plate for mounting the valve on cylinder inlet	PMVSN 300 -C

Spare coils

Order codes	Voltage	Power input
PMVSE260-COD24	24V DC	2,0 W
PMVSE260-COA24	24V 50-60 Hz	5,4 VA
PMVSE260-COA220	230V 50-60 Hz	4,9 VA

Dimensions of valve series MVSN

Type 5/2 with one coil:

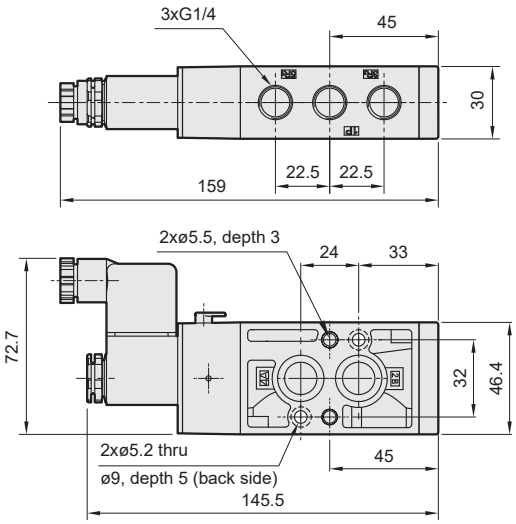

Type 5/2 with two coils:

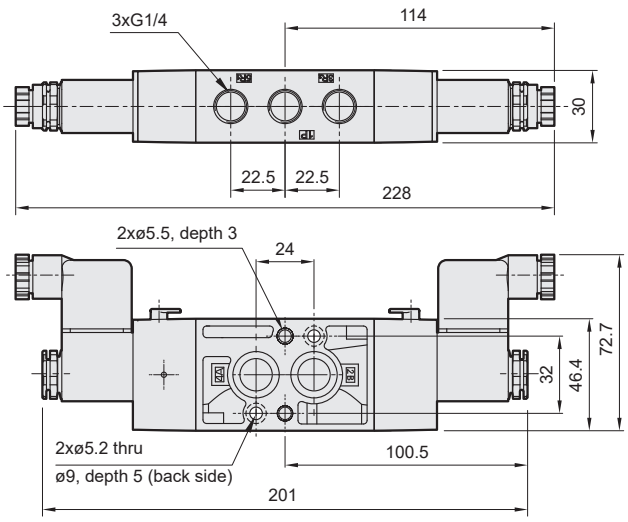

Type 5/3:

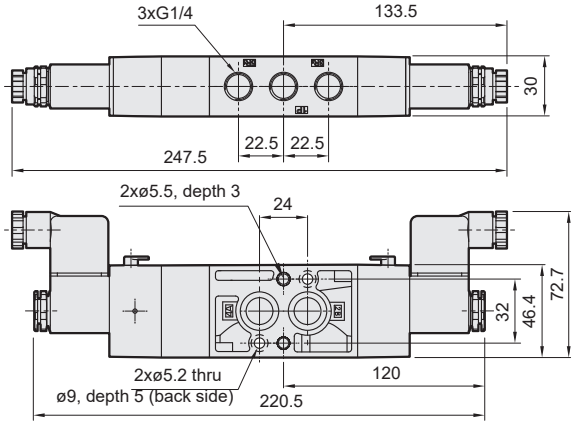

Adapter for making of 3/2 function - PMVSN 300 -A:

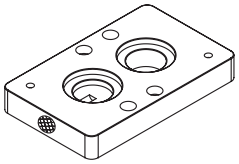

Using this adapter on valve 5/2 with one coil (function 4E1) changes the valve to 3/2 function with NAMUR connection. Adapter can be positioned with silencer toward to the coil, then the function is normally opened, if the silencer will be oposite to the coil, function will be normally closed.

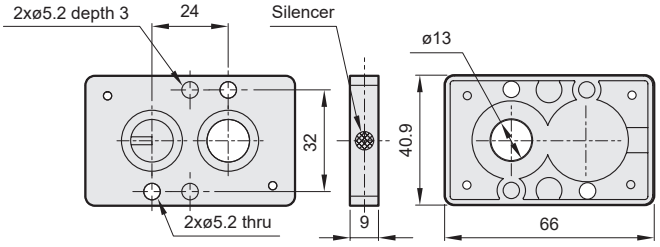

Connection plate for mounting the valve on cylinder inlet PMVSN 300 -C:

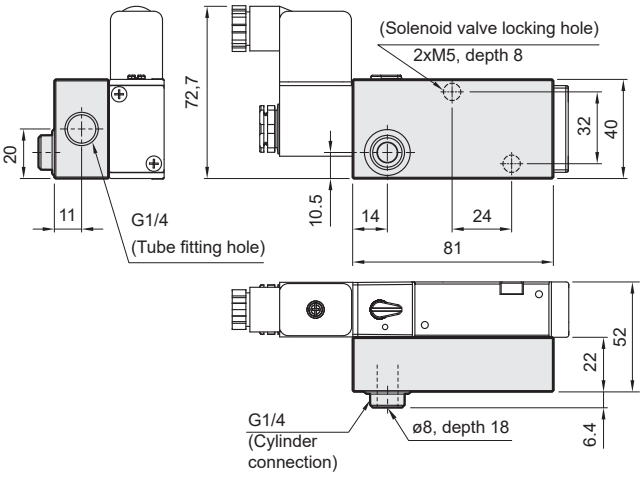

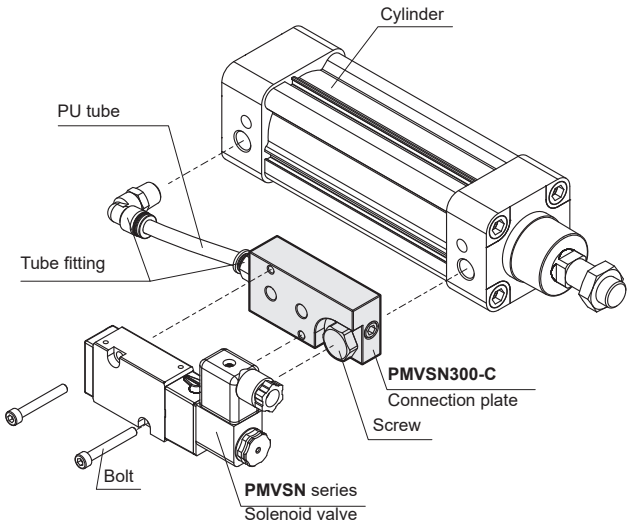

SOLENIOD ACTUATED VALVES
SERIES KI ISO 5599/1 COMPACT

STRÁNSKÝ A PETRŽÍK

Our new soleniod actuated valve series KI is based on the classic ISO series, but has higher flow rate and is also highly economical, compared to the ISO 5599/1 Compact series. Air pilot is used for valve actuating, so it is an indirectly actuated valve. The valves are mounted on base plates standardized according to ISO. The coils and pilot valves are common with the K series. Coil can be rotated to best suit the application. Valves can be used on the base plate individually or mounted as a group assembly.

Valves of the KI ISO 5599/1 Compact series contain a spool ans slide assembly, which guarantees a long service life of the valve.

Series	KI ISO 1 Compact	KI ISO 2 Compact
Flow capacity [Nl/min]	1200	2800
Working pressure [MPa]	0.15 to 1.0 (vacuum up to 2.1 MPa when external air pilot supply is used)	
Pilot pressure range [MPa]	0.15 to 1.0	
Power input [W, VA] (standard coils)	3W for DC voltage, 7.5VA inrush and 5VA hold for AC voltage	
Response time energize / de-energize [ms]	20 / 35	
Temperature range [°C]	medium temperature max. 50, ambient temperature -20 to +50	
Enclosure (standard coils)	IP65 with sealed and fastened connector	

5

Order codes

25 528090 52 60 6 000

Function	
52 80 90	
52 80 80	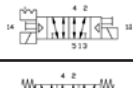
53 80 80	

Size	
51	series ISO 1 Compact (only for series K5)
52	series ISO 2 Compact (only for series K6)

Voltage	
30	24 V DC ± 10%
40	24 V AC ± 10% 50-60 Hz
50	110 V AC ± 10% 50-60 Hz
60	230 V AC ± 10% 50-60 Hz
31	24 V DC ± 10% ATEX II 2G(D)

Series	
5	K5 (only for size ISO 1)
6	K6 (only for size ISO 2)

Construction / materials

- body: aluminium alloy
- spool and sleeve assembly: hardened stainless steel
- main valve sealing: NBR
- pilot valve sealing: Viton®

Supply contains connector(s).

Individual bases, manifold blocks and end plates - see page 5-35.

Dimensions

Type 5/2 and 5/3 with double soleniod:

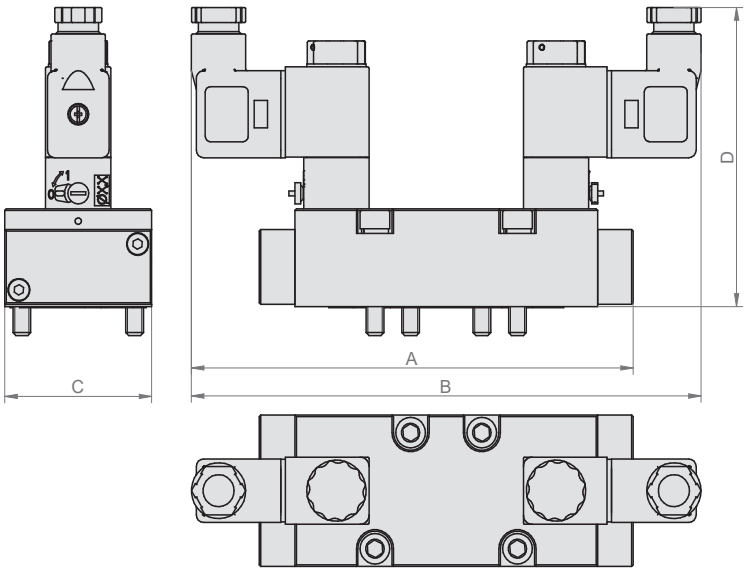

Type 5/2 with a single soleniod:

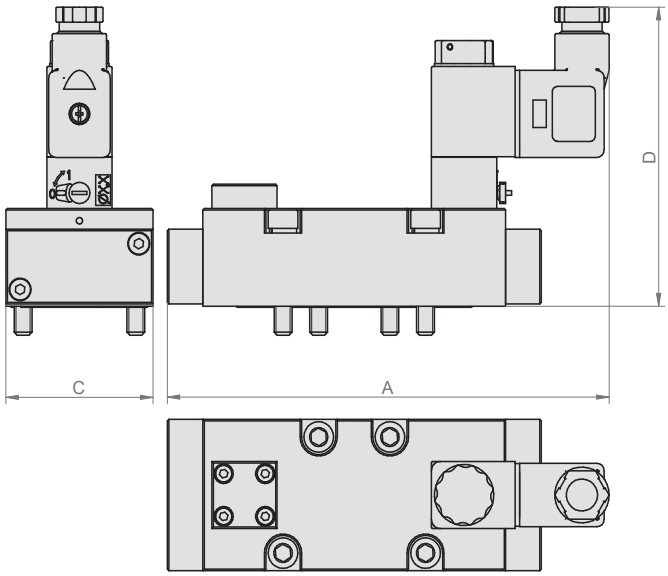

Series	Function	A	B	C	D	Weight [kg]
KI ISO 1 Compact	528090	136	—	42	95	0,42
	528080 538080	136	164	42	95	0,50
KI ISO 2 Compact	528090	149	—	49,5	98	0,60
	528080 538080	149	172	49,5	98	0,68

5

Spare pilot valve for valve series K

Order code	Part	Working pressure [MPa]	Weight [kg]
2532 8090 0000 0004	Pilot	0 to 1	0.027
N230-363	Connector type 22	—	0.024
N540270	Nut	—	0.002

Spare coils for valve series K

Standard coils type 22

Order code	Voltage	Coil type	Weight [kg]
2500 8181 0030 0013	24V DC	DIN 43650B	0.06
2500 8181 0040 0010	24V 50-60 Hz	DIN 43650B	0.06
2500 8181 0060 0009	230V 50-60 Hz	DIN 43650B	0.06
PMVSC220-COA110	110V 50-60 Hz	DIN 43650B	0.06

Notice: The connector is fastened with a M3 screw with a maximum torque of 0.4 to 0.6 Nm

Coil type 22 with ATEX Ex certification

Order code	Voltage	Cable length [m]	Weight [kg]
2500 8181 0030 0014	24V DC	5	0.46

Ex II 2G Ex mb IIC T5 Gb
Ex II 2D Ex tb IIIC T95°C Db IP66

U=24V DC ±10%
I=125 mA
P=3W
Ta=-20°C to +50°C

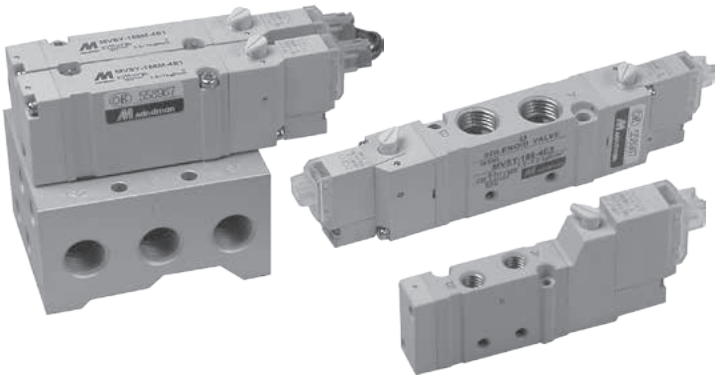

The new valve series with small space requirements and with improved technical parameters (for example lower power consumption). Versions for direct usage (in-line) as well as manifold valves are available. Valves are solenoid pilot actuated. The product range covers functions 5/2 single or double solenoid and 5/3 with centre closed and exhaust position and position with pressure centre. Connector with 0.5m cable and coil are included in delivery.

This valve series contains rubber gaskets.

Series	MVSY 100	MVSY 156	MVSY 188
Ports	M5	G1/8“	G1/4“(G1/8“ for exhaust port 3 and 5)
Flow capacity [Nl/min]	200	630	760
Working pressure [MPa]	0.2 to 0.7	0.15 to 0.7, or 0.2 to 0.7 for function 5/3	
Power input [W, VA]	1.2W for DC voltage, 2.5/1.6VA for AC voltage (inrush/hold), LED indicator		
Response time [ms]	12, or 15 for function 5/3	19, or 32 for function 5/3	23, or 50 for function 5/3
Coil voltage tolerance	±10%		
Temperature range [°C]	ambient temperature -5 to +50		
Enclosure	IP40		

5

Order codes

PMVSY 156 42 D24

Size	
100	series MVSY 100, thread M5**
100M	series MVSY 100, without threads, for manifold *
156	series MVSY 156, thread G1/8“
156M	series MVSY 156, without threads, for manifold *
188	series MVSY 188, thread G1/4“
188M	series MVSY 188, without threads, for manifold *

*) These valves are without threaded ports. Threaded ports are on the side of manifold - for details see below.
) It is **not possible to use the straight push-in fittings for a tube ∅6 with this valve.

Function		
41	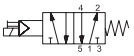	5/2 monostable (with 1 coil)
42	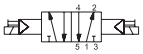	5/2 bistable (with 2 coils)
42C	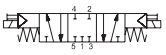	5/3 with closed centre position
42P	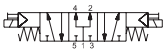	5/3 with pressure centre position
42R	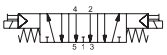	5/3 with exhaust centre position

Voltage	
D6	6 V DC ± 10%
D12	12 V DC ± 10%
D24	24 V DC ± 10%
A220	230 V AC ± 10%, 50-60 Hz

Connector with 0.5m cable is included in delivery. Available are also connectors with cable:
length 5m ... order code PMVSY-C5
length 10m ... order code PMVSY-C10.
See page 5-34.

Order codes of manifolds

PMVSY 100 M-5M 4

Size	
100	series MVSY 100
156	series MVSY 156
188	series MVSY 188

Type	
-5B	valve with threaded ports
M-5M	valve without threaded ports, manifolds with ports+

Number of positions	
2 to 10	for 2 to 10 valves

+) For series MVSY 100, it is only possible to use the straight cylindrical push-in fittings for tube ∅4 (N102-004-000-01) and ∅6 (N102-006-000-01). See page 10-2.

It is possible to mount series MVSY valves on manifold with predefined number of position. It isn't possible to add another position to created assembly - it could be necessary to replace manifold or create another manifold. If there is possibility that more valves will be needed in future, we recommend to use manifold with more positions and use blocking plates for unused positions. Valves are mounted to manifold directly - no adaptor is necessary. Valves mounted on manifold could be unmounted separately by unscrew of 2 bolts, which are accessible from top side (side with ports 2 and 4 of valves). Each separate coil must be wired with separate electrical cable. There are also manifolds with a common connector available - for more information, contact our technical department.

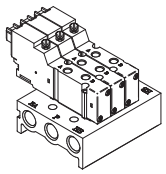

Manifolds for valves with threaded ports - PMVSYxxx4... - these valves are with threads on all five ports (ports 1,2,3,4 and 5). In this case, the manifold PMVSYxxx-5Bx, which has only ports 1,3 and 5 is used.

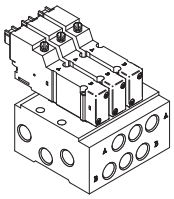

Also available are **manifolds for valves without threads** - PMVSYxxxM4... - these valves are without threads and ports - they are entirely intended for use on manifold. In this case, manifold PMVSYxxxM-5Mx, which has common ports 1,3 and 5 and outlet ports 2 and 4 for each valve position, is used. This lay-out simplifies assembly and maintenance - valve can be easily unmounted without unplugging of connections on ports 2 and 4.

Order codes of blocking plate for manifolds

PMVSY 100 - 5P

Size	
100	series MVSY 100
156	series MVSY 156
188	series MVSY 188

Blocking plate	
-5P	blocking plate

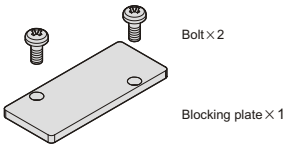

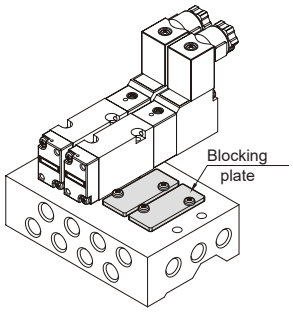

Blocking plates are used for blocking outlets from manifold in case, that not all positions are used presently and expansion of the assembly is planned in the future. In that case, the blocking plate will be changed with valve and manifold is without change.

Order codes of brackets of individual valves with threaded ports

PMVSY 100 - 1A

Size	
100	series MVSY 100
156	series MVSY 156
188	series MVSY 188

Bracket type	
-1A	horizontal
-2A	vertical

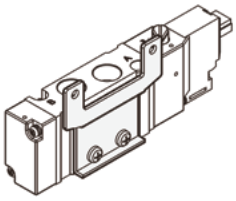

Horizontal bracket

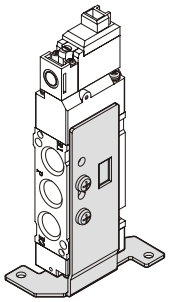

Vertical bracket

Brackets can be used for individually mounted valves with threaded ports - valves are without through hole for fixing, that is why it is better to use bracket for easy assembly in some cases. **Vertical brackets are only for monostable valves (4/2, one coil, function 41).**

Dimensions of valve series MVSY 100

Type 5/2 with single solenoid:

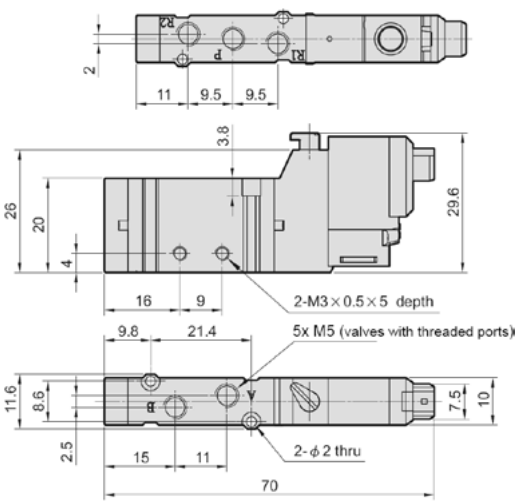

Type 5/2 with double solenoid:

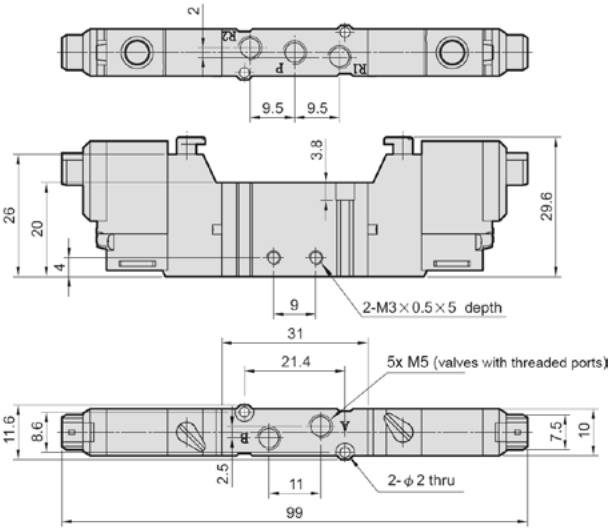

Type 5/3:

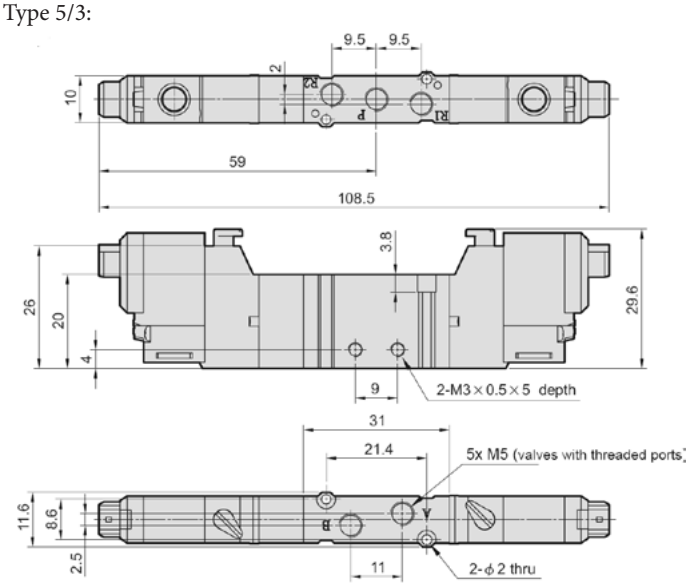

Horizontal bracket:

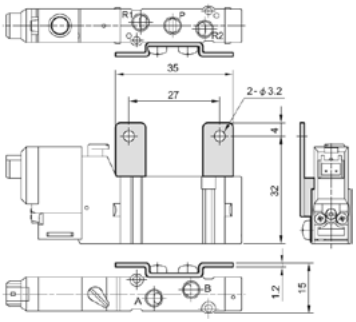

Vertical bracket:

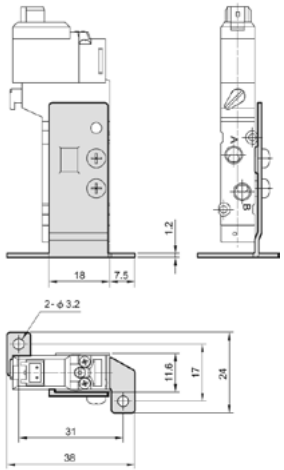

Function	Weight [kg]
41	0,030
42	0,043
42C/P/R	0,055

Dimensions of valve series MVSY 156

Type 5/2 with single solenoid:

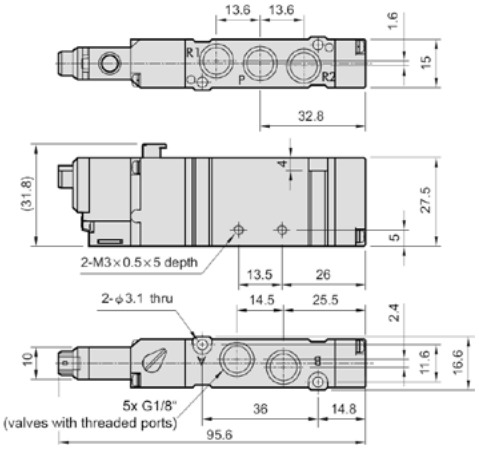

Type 5/2 with double solenoid:

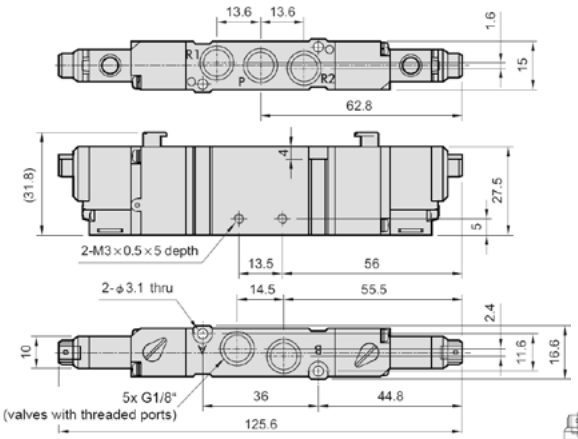

Function	Weight [kg]
41	0.068
42	0.087
42C/P/R	0.096

Type 5/3:

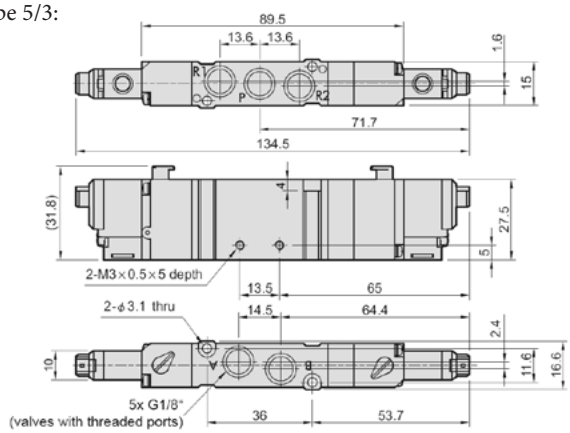

Horizontal bracket:

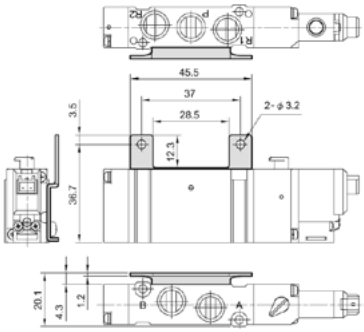

Vertical bracket:

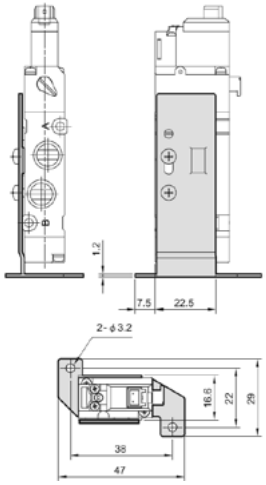

Dimensions of valve series MVSY 188

Type 5/2 with single solenoid:

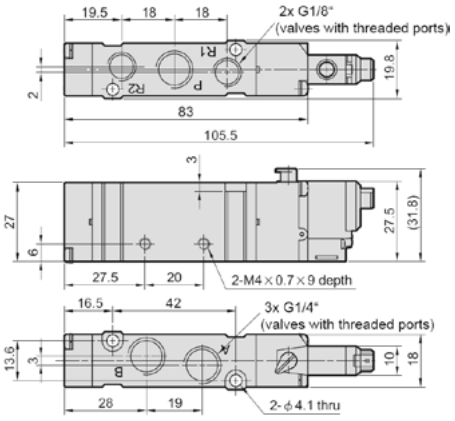

Type 5/2 with double solenoid:

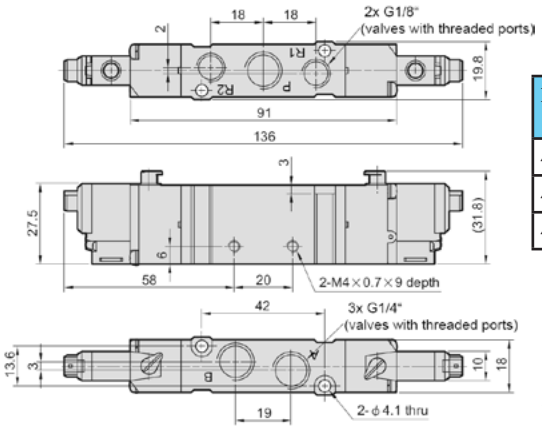

Function	Weight [kg]
41	0.084
42	0.106
42C/P/R	0.116

Type 5/3:

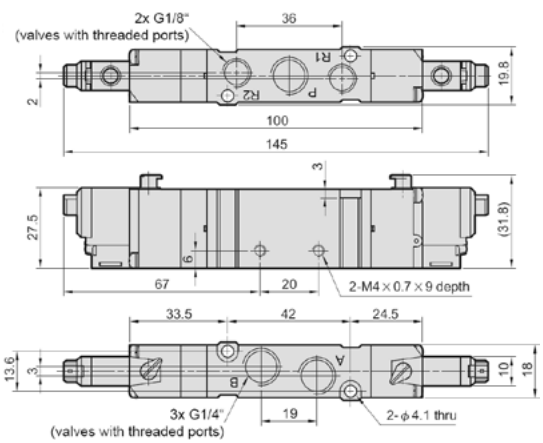

Horizontal bracket:

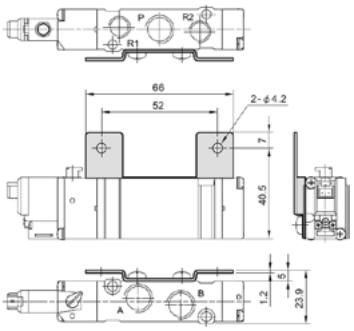

Vertical bracket:

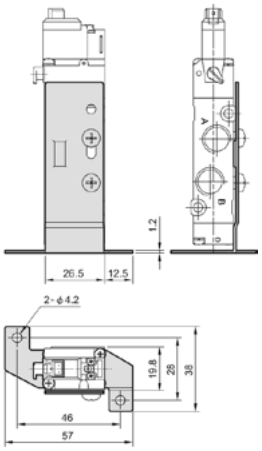

Dimensions of manifold assemblies of valves series MVSY

Type -5B for valves with threaded ports

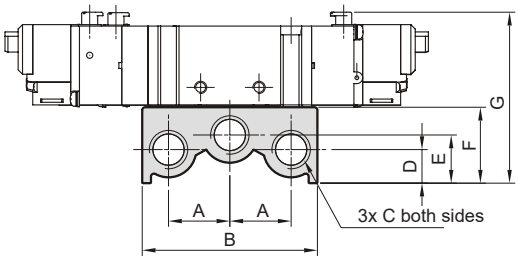

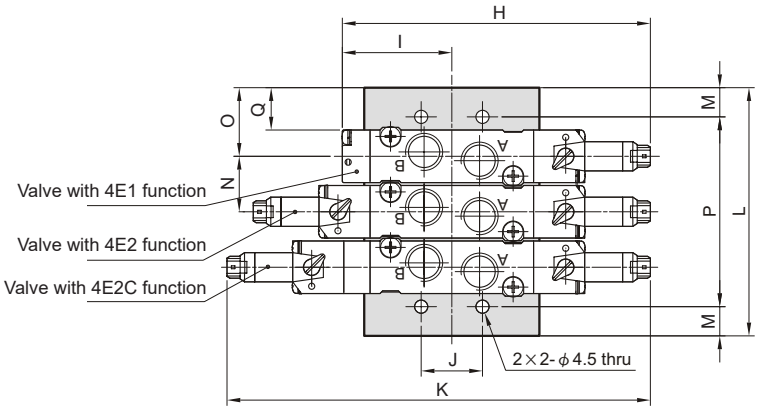

Series	Value	Number of positions								
		2	3	4	5	6	7	8	9	10
100	L	48.5	59	69.5	80	90.5	101	111.5	122	132.5
	P	30.5	41	51.5	62	72.5	83	93.5	104	114.5
	Weight [kg]	0.07	0.08	0.10	0.12	0.13	0.15	0.16	0.18	0.19
156	L	60	76	92	108	124	140	156	172	188
	P	40	56	72	88	104	120	136	152	168
	Weight [kg]	0.14	0.17	0.21	0.24	0.28	0.31	0.35	0.39	0.42
188	L	66	85	104	123	142	161	180	199	218
	P	46	65	84	103	122	141	160	179	198
	Weight [kg]	0.18	0.23	0.27	0.32	0.37	0.42	0.47	0.52	0.57

Series	A	B	C	D	E	F	G	H	I	J	K
100	16.5	49	G1/8“	12.5	12.5	20	50.1	75	24.5	16	108.5
156	21	60	G1/4“	11.5	16.5	26	58.6	96.5	22.8	20	134.5
188	21	60	G1/4“	11.5	16.5	26	58.6	105.5	37.5	21	145

Series	M	N	O	Q
100	9	10.5	19	14
156	10	16	22	14.5
188	10	19	23.5	14.5

5

Type M-5M for valves for manifold (without threaded ports)

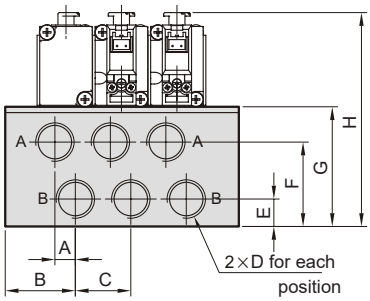

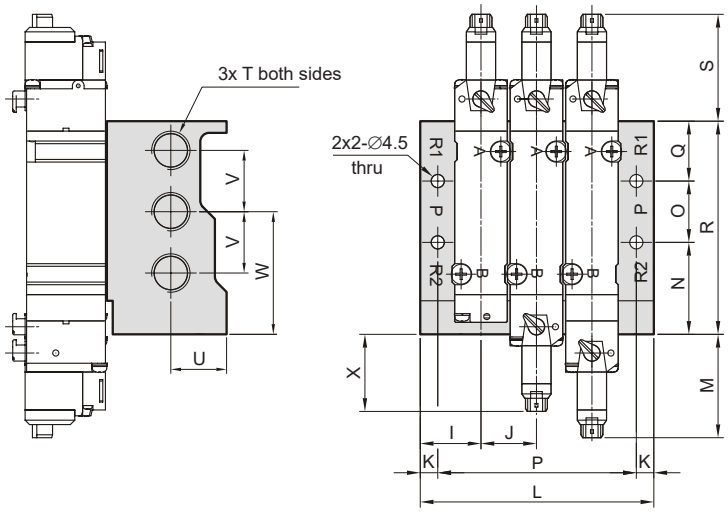

Series	Value	Number of positions								
		2	3	4	5	6	7	8	9	10
100	L	47.5	60	72.5	85	97.5	110	122.5	135	147.5
	P	39.5	52	64.5	77	98.5	102	114.5	127	139.5
	Weight [kg]	0.18	0.2	0.28	0.32	0.37	0.41	0.46	0.50	0.55
156	L	59.5	77	94.5	112	129.5	147	164.5	182	199.5
	P	49.5	67	84.5	102	119.5	137	154.5	172	189.5
	Weight [kg]	0.25	0.3	0.40	0.47	0.55	0.62	0.69	0.77	0.84
188	L	61	80	99	118	137	156	175	194	213
	P	49	68	87	106	125	144	163	182	201
	Weight [kg]	0.39	0.5	0.62	0.74	0.85	0.97	1.09	1.20	1.32

Series	A	B	C	D	E	F	G	H	I	J	K	M	N	O	Q	R	S	T	U	V	W	X
100	7	15	12.5	G1/8“	7.4	22.2	32	61.6	18.5	12.5	4	29.9	24.6	16	15.2	55.8	22.8	G1/8“	8 (15)	16	32.6	20.4
156	8.5	19	17.5	G1/4“	10	27.5	38	70.3	21	17.5	5	33.7	29	20	19	68	32.8	G1/4“	17.6	20	39	24.8
188	7	24	19	G1/4“	9.4	28.9	41	73.3	20.8	19	6	35.4	31.5	21	20.5	73	36.6	G1/4“	19.1	21	42	26.4

STRÁNSKÝ A PETRŽÍK

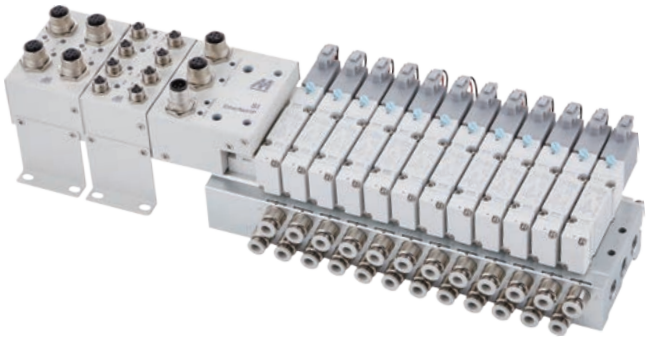

The fieldbus system of the MVE series system allows the connection and control of valves and other inputs and outputs using the EtherNet / IP protocol. Up to 23 channels are available in one set for the control of associated valves (MVSY 100 and MVSY 156 series) as well as up to 8 input and output units, with 8 inputs or 8 outputs in each unit. It is therefore easy to connect and control the island with valves and send back to the control system, for example, the states of the end position sensors. The configuration can be modified using a web browser or using a configuration program on a computer. Both the main and I/O units have LEDs that inform the user of the status.

Order codes of fieldbus system with valve and serial interface

P MVE - 156C6-5B 4 □ - SSDC - G - EA P 2

Model - series MVSY 100	
100-5B	threads M5 on valve
100M-5M	threads G1/8“ on manifold
Model - series MVSY 156	
156C4-5B	tube ø4 fitting on valve
156C6-5B	tube ø6 fitting on valve
156C8-5B	tube ø8 fitting on valve
156M4-5M	tube ø4 fitting on manifold
156M6-5M	tube ø6 fitting on manifold
156M8-5M	tube ø8 fitting on manifold

Number of valves	
2 to 12	number

Valve COM spec.	
	-COM
N	+COM

SI unit	
	without
EA	EtherNet/IP

SI unit output	
P	-COM
N	+COM

Number of I/O units	
	none
1 to 8	number

Valve type		
S	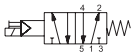	5/2 monostable (with 1 coil)
D	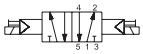	5/2 bistable (with 2 coils)
C	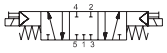	5/3 with closed centre position
P	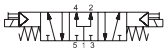	5/3 with pressure centre position
R	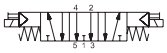	5/3 with exhaust centre position
B	blocking plate (w/o valve)	

Notes:
- SI unit output and valve COM spec. must be the same.
- The valve arrangement is numbered as the 1st station from the SI unit side, use as many letters as there are valves in the code
- I/O unit cannot be installed without SI unit.
- I/O units must be ordered and specified separately, they will be delivered separately.

5

Order codes of I/O units

Order code	Description
PMVE-100-DIPA	DI unit - 8 inputs PNP
PMVE-100-DINA	DI unit - 8 inputs NPN
PMVE-100-DOPB	DO unit - 8 outputs PNP
PMVE-100-DONB	DO unit - 8 outputs NPN

Example of order codes of fieldbus system
assembly with valves and I/O units

PMVE-156M4-5M6-DSSSSS-G-EAP3

Set of 6 valves MVSY 156 (1x 5/2 bistable, 5x 5/2 monostable) with tube ø4 fittings on the manifold, -COM, incl. SI unit for 3 I/O units.

2 pcs ... PMVE-100-DIPA 2 digital input units PNP (total 16 inputs)

1 pc ... PMVE-100-DOPB Digital output unit PNP (total 8 outputs)

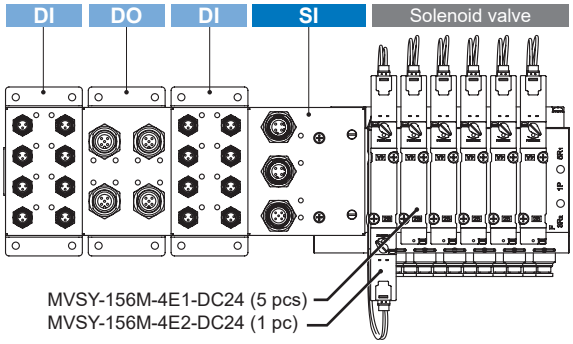

Technical data of SI unit (serial interface)

Description	Value
Interface protocol	EtherNet/IP
Communication speed	10/100 Mbps
Configuration file	EDS
Power connector	M12 (5 pins)
Control & input power supply	24V DC class 2, 2A
Output power supply	24V DC class 2, 2A
Consumption	12W
Polarity of output for valves	PNP (-COM), NPN (+COM)
Power supply of valves	24V DC class 2, 2A
Number of valve outputs	23
Suitable valves	MVSY 100, MVSY 156, 24V DC
Fail safe of valves	hold, off, setting value
Protective function for valve	short circuit protrction
Working environment	temperature -20°C to +50°C, humidity 10% to 90% RH

For more information please visit our web page on www.sappv.cz/r/e13e

Technical data of DI unit (digital input)

Description	Value
Inpout type	PNP or NPN
Input connector	8x M8 (3 pins)
Number of inputs	8 (1 input / connector)
Sensor supplied voltage	24V DC
Max. sensor supplied current	0.25A / connector, 2A / unit
Rated input current	9 mA
ON voltage (NPN input)	≥17V
OFF voltage (PNP input)	≤5V
Features	Short / open - circuit detection
Power supply voltage	24V DC class 2, 2A
Working environment	temperature -10°C to +50°C, humidity 35% to 85% RH
Isolation	500V AC, 10MΩ

Technical data of DO unit (digital output)

Description	Value
Output type	PNP or NPN
Output connector	4x M12 (5 pins)
Number of outputs	8 (2 outputs / connector)
Rated load voltage	24V DC
Max. load current	0.5A / connector, 2A / unit
Features	Short / open - circuit detection
Power supply voltage	24V DC class 2, 2A
Working environment	temperature -10°C to +50°C, humidity 35% to 85% RH
Isolation	500V AC, 10MΩ

System and accessories diagram

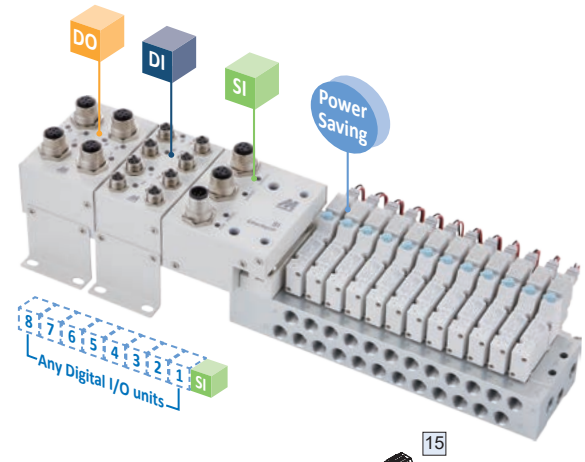

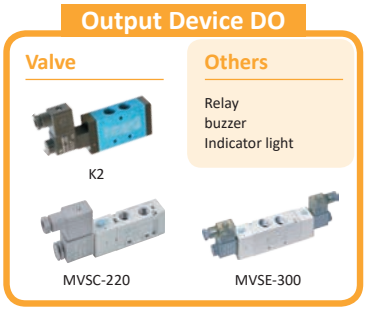

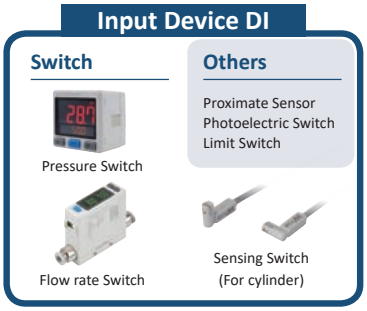

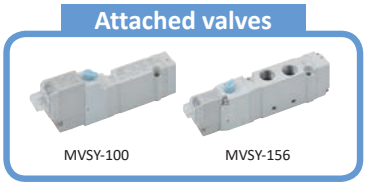

SI	Serial interface
DI	Digital input
DO	Digital output

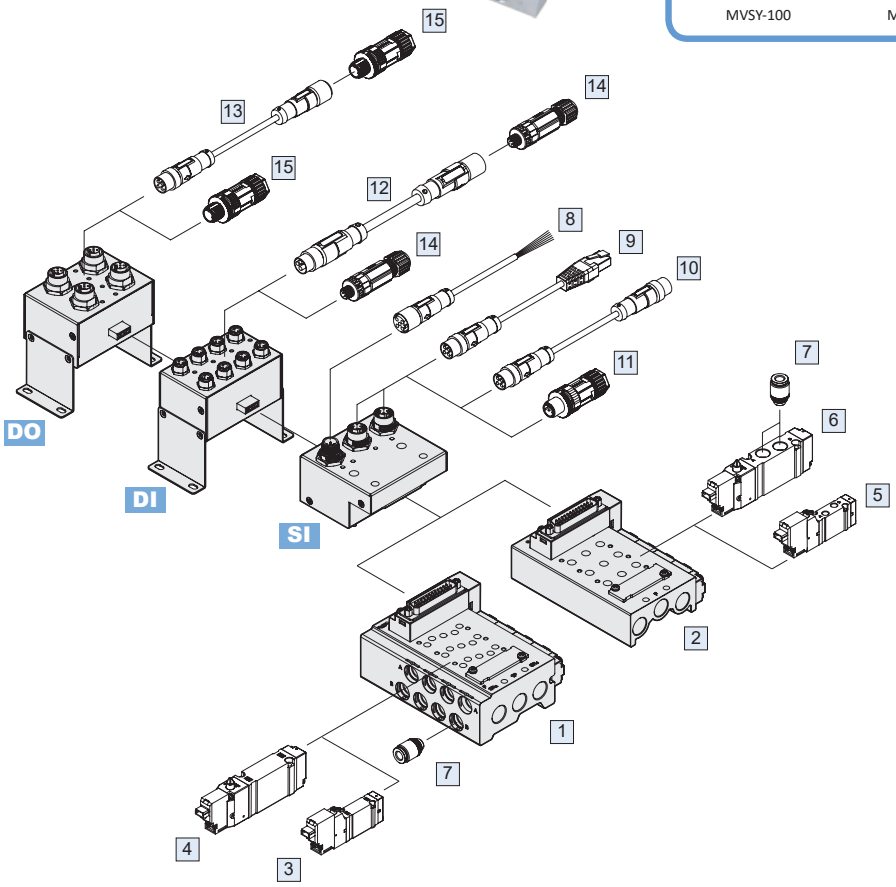

Pos.	Description	Page
1	Manifold (ports on manifold)	5-18
2	Manifold (body ported valves)	5-18
3	Valve MVSY-100 (manifold type)	5-18
4	Valve MVSY-156 (manifold type)	5-18
5	Valve MVSY-100 (body ported)	5-18
6	Valve MVSY-156 (body ported)	5-18
7	Fittings	10-2
8	Supply cable PM125R-WB (M12, 5 pin)	5-34
9	Cable w/conn. PM124R-RJD (M12, 4 pin)	5-34
10	Cable w/conn. PM124R-MD (M12, 4 pin)	5-34
11	Connector PM124C-MD (M12, 4 pin)	5-34
12	Cable w/connectors PM83R-F (M8, 3 pin)	5-34
13	Cable w/conn. PM124R-FA (M12, 4 pin)	5-34
14	Connector PM83C-M (M8, 3 pin)	5-34
15	Connector PM124C-MA (M12, 4 pin)	5-34

SOLENOID ACTUATED HIGH FLOW VALVES

STRÁNSKÝ A PETRŽÍK

High flow valve series with flow capacity up to 28 000 Nl/min is suitable for fast air supply of big appliances, or higher quantity of appliances which are supplied from common distribution. Valves are pilot operated, using smaller, standard electromagnetic actuated valves ISO 5599/1. These pilot valves are designed for external supply of compressed air, however the common supply is possible, but in this case, please contact our technical dept.

This valve series contains rubber gaskets.

Series	G1“	G1 ½“
Ports	G1“	G1 ½“
Connection of external pressure supply port	G1/4“	
Connection of pilot (12,14) for pneumatic actuating	G1/8“	
Flow capacity [Nl/min]	16 000	28 000
Working pressure [MPa]	0 to 1.0 MPa when external pilot supply is used	
Pilot pressure range [MPa]	0.2 to 0.7	
Power input [W, VA]	2.5W for DC voltage, 6/4.9VA for AC voltage (inrush/hold)	
Response time for DC voltage [ms]	60	70
Response time for AC voltage [ms]	60	70
Temperature range [°C]	medium temperature max. 50, ambient temperature -20 to +50	

5

Order codes

25 52 80 90 20 30 000 1

Function		
52 80 90	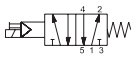	5/2 monostable (with 1 coil)
52 80 80	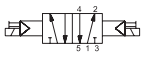	5/2 bistable (with 2 coils)

Size	
14	G1“
20	G1 ½“

Voltage	
30	24 V DC ± 10%
40	24 V AC ± 10%, 50-60 Hz
60	230 V AC ± 10%, 50-60 Hz

Pilot supply	
2	external (from port X), standard
1*	internal (from port 1)

*) Please consult with our technical dept.

Supply contains connector(s).

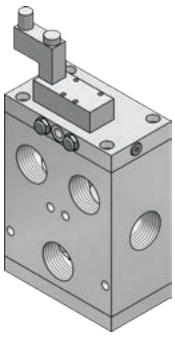

Function 52 80 90

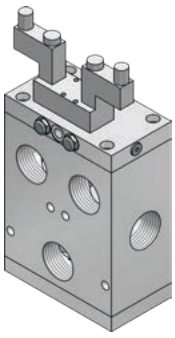

Function 52 80 80

Dimensions

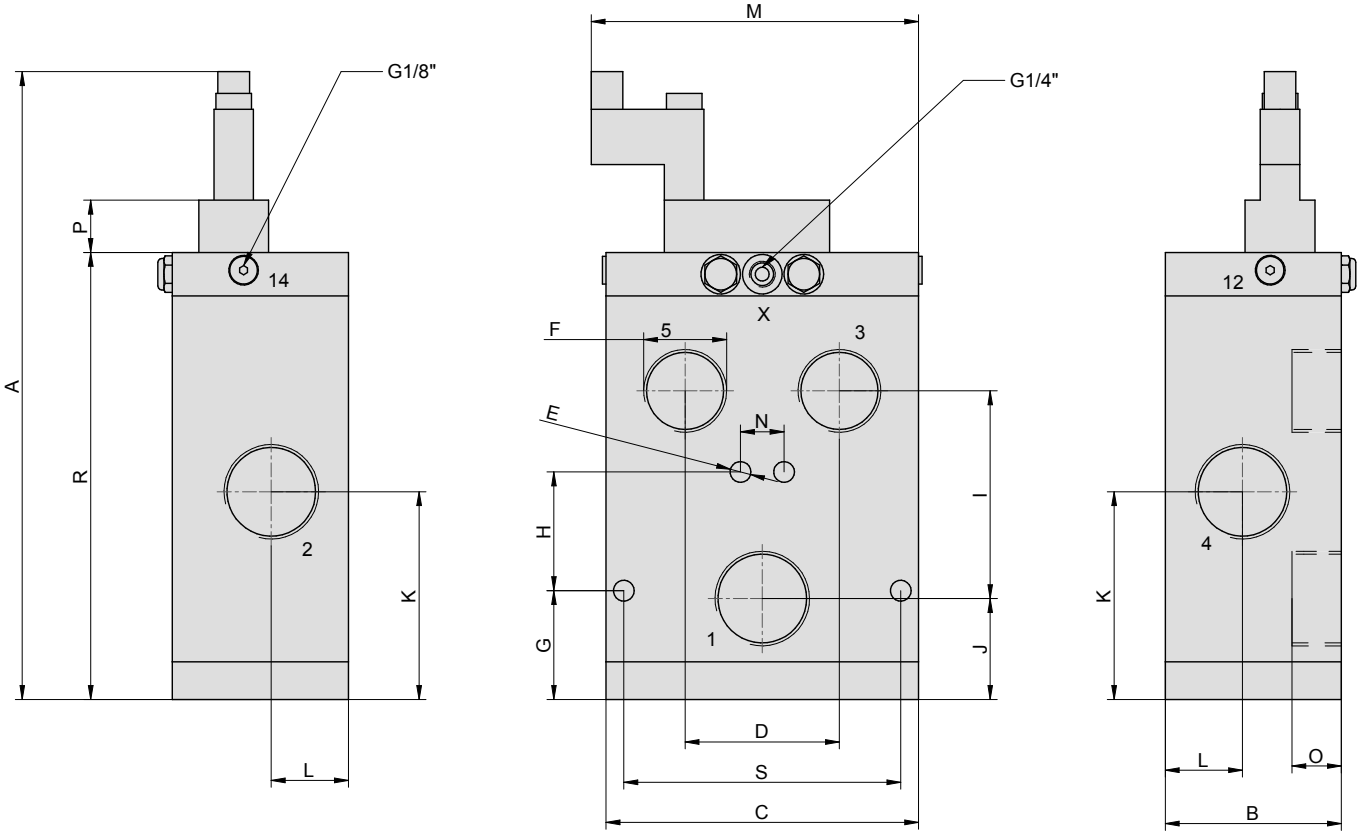

Series	A	B	C	D	E	F	G	H	I	J	K	L	M	N	O	P	R	S	Weight [kg]
52 80 x0 14	317	89	158	78	10.5	G1"	55	60	105	51	105	39	165.5	22	25	26.4	226	140	7.5
52 80 x0 20	317	89	158	78	10.5	G1 1/2"	55	60	105	51	105	39	165.5	22	25	26.4	226	140	7.5

Notes for connecting of valve

Valves are designed for independent, external air pilot supply (port X). It is not recommended, to merge air supply for main valve and for pilot valve, because a big flow through main valve may cause serious dropping of pressure for pilot valve and malfunction may occur.

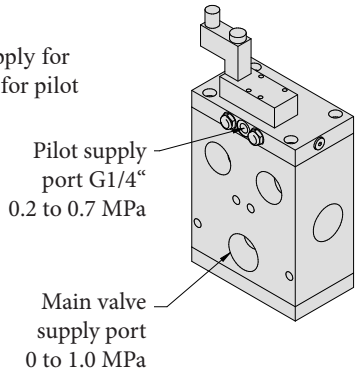

SOLENOID ACTUATED VALVES SERIES MVSC

STRÁNSKÝ A PETRŽÍK

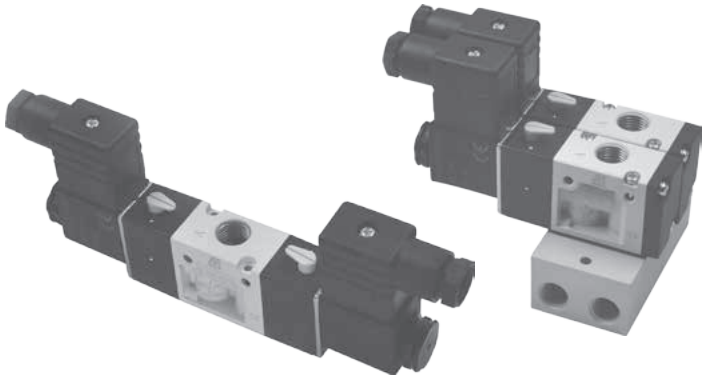

The valve series, which replaces valves series K. The basic usable features are kept and brings some improvements such as lower wattage, comparable or bigger flow capacity and better accessibility. Valves are solenoid pilot actuated. The product range covers functions 3/2 normally closed, opened and double solenoid. Connector and coil are included in delivery.

This valve series contains rubber gaskets.

Series	MVSC 220	MVSC 300	MVSC 460
Ports	G1/4“	G3/8“	G1/2“
Flow capacity [Nl/min]	980	1905	2730
Working pressure [MPa]	0.2 to 0.8		
Power input [W, VA]	2.5W for DC voltage, 6/4.9VA for AC voltage (inrush/hold)		
Response time [ms]	30	50	50
Coil voltage tolerance	±10%		
Temperature range [°C]	ambient temperature -5 to +50		
Enclosure	IP65 with sealed and fastened connector		

5

Order codes

PMVSC 220 3E1C A220

Size	
220	series MVSC 220, thread G1/4“
300	series MVSC 300, thread G3/8“
460	series MVSC 460, thread G1/2“

Function		
3E1C	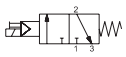	3/2 normally closed
3E1O	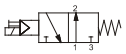	3/2 normally opened
3E2	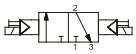	3/2 bistable (with 2 coils)

Voltage	
D12	12 V DC ± 10%
D24	24 V DC ± 10%
A220	230 V AC ± 10%, 50-60 Hz
A24	24 V AC ± 10%, 50-60 Hz

Supply contains connector(s).

Order codes of manifolds

PMVS C220 - 3B 4

Size	
C220	series MVSC and MVAA 220, thread G1/4“
C300	series MVSC 300, thread G3/8“
C460	series MVSC and MVAA 460, thread G1/2“

Number of positions	
2 to 10	for 2 to 10 valves

It is possible to mount series MVSC and MVAA valves on manifold with predefined number of position. It isn't possible to add another position to created assembly - it could be necessary to replace manifold or create another manifold. If there is possibility that more valves will be needed in future, we recommend to use manifold with more positions and use blocking plates for unused positions. Valves are mounted to manifold directly - no adaptor is necessary. Valves mounted on manifold could be unmounted separately by unscrew of 2 bolts, which are accessible from top side (side with ports 2 and 4 of valves). Each separate coil must be wired with separate electrical cable.

Manifolds with internal wiring and common 25-pin SUB-D connector are also available. These manifolds are for valves series 220 and 300. Number of stations is 3 to 12 as standard, maximum is 20. Voltage of coils is 24V DC. For more information about these manifolds, please contact our technical department.

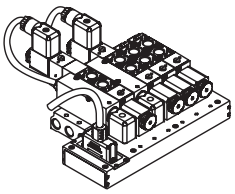

Order codes for blank station plates:

Series	Order codes
220	PMVSC 220 -3P
300	PMVSC 300 -3P
460	PVMSC 460 -3P

Dimensions of valve series MVSC

Type 3/2 NC and NO:

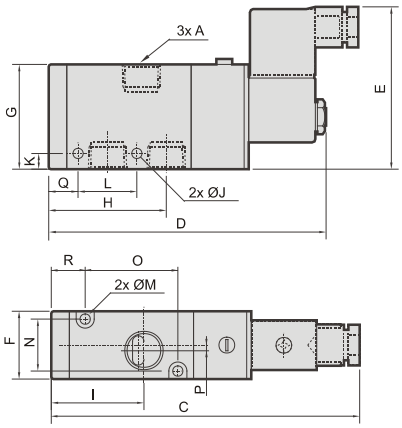

Type 3/2 with 2 coils:

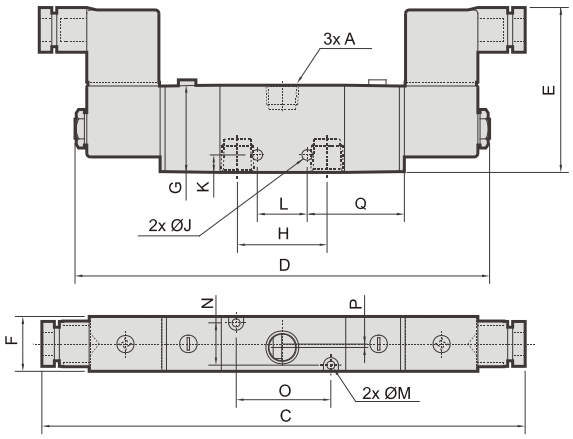

Series	Function	A	C	D	E	F	G	H	I	J	K	L	M	N	O	P	Q	R	Weight [kg]
220	3E1	G1/4“	120	105.5	67	22.3	35	35	26	4.2	26.5	25	3.2	17	25	2	13.5	13.5	0.20
	3E2	G1/4“	188	159	68	22.3	35	18	—	4.2	26.5	25	3.2	17	25	2	30.5	—	0.30
300	3E1	G3/8“	139.5	126.5	73	30	46.4	52	41	4.5	9	26	4.5	23	41	0	13	15	0.35
	3E2	G3/8“	208	182	73	30	46.4	26	—	4.5	9	26	4.5	23	41	0	50	—	0.44
460	3E1	G1/2“	146	133	73	30	46.4	56	40.5	4.5	9	29	4.2	23	48	2.3	12.5	15	0.35
	3E2	G1/2“	214	188	73	30	46.4	29	—	4.5	9	29	4.2	23	48	2.3	54.5	—	0.44

5

Dimensions of manifold assemblies of valves series MVSC and MVAA

Series	Value	Number of positions								
		2	3	4	5	6	7	8	9	10
220	L	77	100	123	146	169	192	215	238	261
	M	65	88	111	134	157	180	203	226	249
	Weight [kg]	0.20	0.26	0.32	0.38	0.44	0.50	0.56	0.63	0.69
300	L	81	112	143	174	205	236	267	298	329
	M	71	102	133	164	195	226	257	288	319
	Weight [kg]	0.31	0.43	0.55	0.66	0.78	0.90	1.02	1.14	1.26
460	L	81	112	143	174	205	236	267	298	329
	M	71	102	133	164	195	226	257	288	319
	Weight [kg]	0.36	0.50	0.65	0.79	0.93	1.07	1.20	1.36	1.50

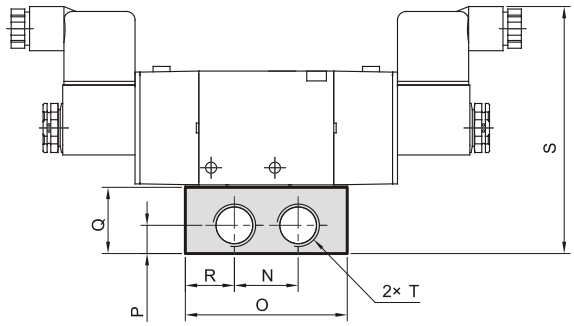

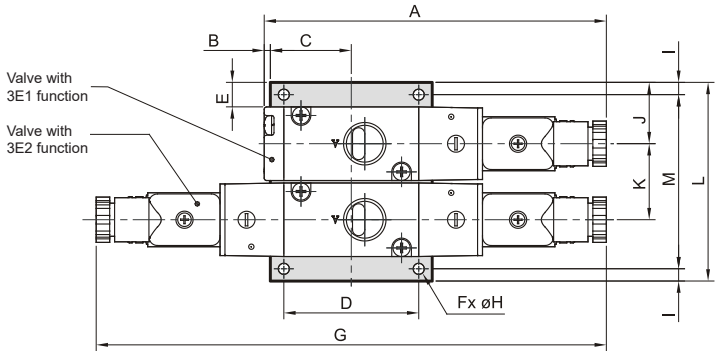

Spare coils for series 220/300/460

Order codes	Voltage	Power input
PMVSC220-COD12	12V DC	3.1 W
PMVSC220-COD24	24V DC	2.5 W
PMVSC220-COA24	24V 50-60 Hz	5.8 VA
PMVSC220-COA110	110V 50-60 Hz	4.9 VA
PMVSC220-COA220	230V 50-60 Hz	5.0 VA

Series	A	B	C	D	E	F	G	H	I	J	K	N	O	P	Q	R	S	T
220	120	5	21	0	15.5	2	188	4.5	6	27	23	22	42	10	28	10	96	G1/4“
300	139.5	2.5	33	55	10	4	208	4.5	5	25	31	26	66	11.5	27	20	101	G3/8“
460	146	3	36	60	10	4	214	4.5	5	25	31	30	72	15	32	21	106	G1/2“

SOLENOID ACTUATED VALVES SERIES NAF

STRÁNSKÝ A PETRŽÍK

Series of poppet seat valves 2/2 and 3/2 with indirect actuating offers all functions which you need. Normally open as well as normally closed versions are available. Due to construction, these valves are reliable and offers maximal flow capacity.

This valve series contains rubber gaskets.

Ports	G1/8“	G1/4“	G3/8“	G1/2“	G3/4“	G1“	G1 1/2“
Flow capacity [Nl/min]	580	1100	1500	5400	6500	13500	35000
Working pressure [MPa]*	0.15 to 1.0	0.16 to 1.0	0.16 to 1.0	0.2 to 1.0	0.2 to 1.0	0.22 to 1.0	0.25 to 1.0
Power input for DC coils [W]	3.5			11			
Power input for AC coils [VA]	7.8 inrush, 5 hold			16 inrush, 10 hold			
Response time energize / de-energize [ms] NC	15 / 20	20 / 23	20 / 23	17 / 27	17 / 27	20 / 32	47 / 22
Response time energize / de-energize [ms] NO	15 / 20	15 / 20	15 / 20	30 / 22	30 / 22	28 / 23	55 / 20
Temperature range [°C]	medium temperature max. 60, ambient temperature -5 to +50						
Coil type	type 22	type 22	type 22	type A	type A	type A	type A

*) For vacuum, the NAG series is available - please contact our technical or sales dept. for more information.

Order codes

NAF25 100G 61

Size	
NAF25	series NAF

Function, port size		
000G	G1/8“	NC
010G	G1/8“	NO
100G	G1/4“	NC
110G	G1/4“	NO
200G	G3/8“	NC
210G	G3/8“	NO
300G	G1/2“	NC
310G	G1/2“	NO
320G	G1/2“	NC
400G	G3/4“	NC
410G	G3/4“	NO
420G	G3/4“	NC

Function, port size		
450G	G1“	NC
460G	G1“	NO
470G	G1“	NC
610G	G1 1/2“	NO
650G	G1 1/2“	NC
670G	G1 1/2“	NC

Voltage	
60	12 V DC ± 10%
61	24 V DC ± 10%
40	230 V AC ± 10% 50-60 Hz
30	110 V AC ± 10% 50-60 Hz
20	24 V AC ± 10% 50-60 Hz

For connectors for valves see page 5-34.

Dimensions of valve series NAF

Port size G1/8“

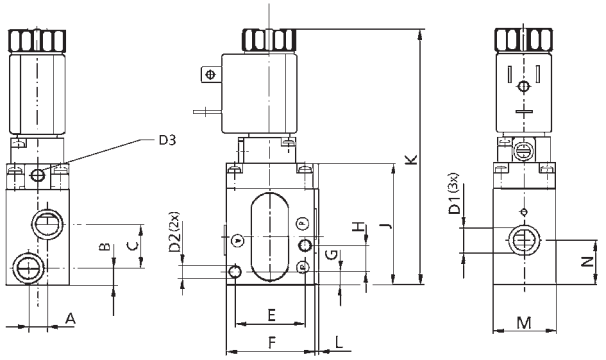

Port size G1/4“ and G3/8“

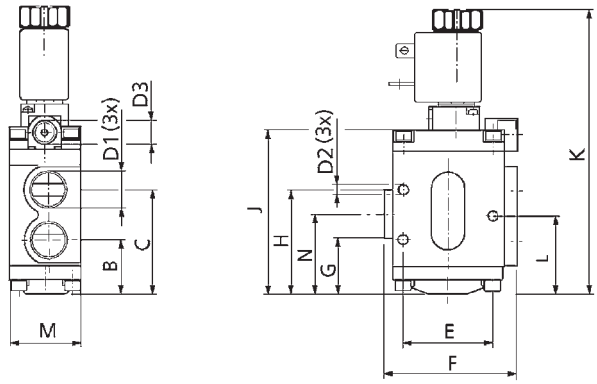

Port size	A	B	C	D1	D2	D3	E	F	G	H	J	K	L	M	N	Weight [kg]
G1/8“	7.5	7	17.5	G1/8“	4.5	G1/8“	28	36	5.3	10.5	48.5	102	1.9	25	17.8	0.25
G1/4“	—	24	47	G1/4“	4.5	G1/8“	40	60	25	47	74	129	35.5	32	36	0.58
G3/8“	—	24	47	G3/8“	4.5	G1/8“	40	60	25	47	74	129	35.5	32	36	0.56

Port size G1/2“ to G1“

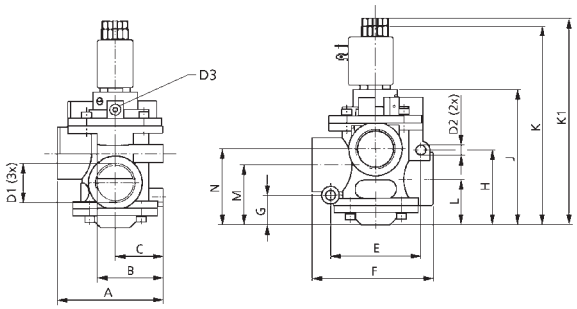

Port size G1 1/2“

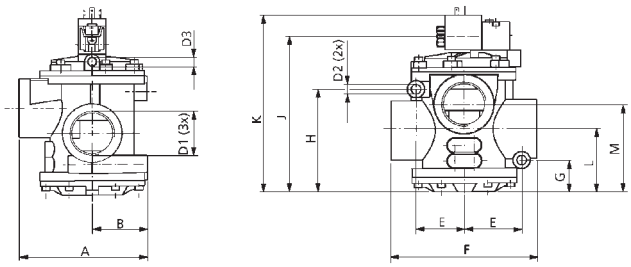

Port size	A	B	C	D1	D2	D3	E	F	G	H	J	K	K1	L	M	N	Weight [kg]
G1/2“	75	47	35	G1/2“	6.4	G1/8“	63	78.5	21	54.5	100	150	154	30	41	50.5	1.19
G3/4“	75	47	35	G3/4“	6.4	G1/8“	63	78.5	21	54.5	100	150	154	30	41	50.5	1.13
G1“	89	55	40	G1“	8.4	G1/8“	76	101	25.5	62.5	115	167	174	38	51	64	1.62
G1 1/2	138	59	—	G1 1/2“	10.8	G1/8“	51	158	34	113	170	192.5	—	68	96	—	2.27

Spare coils for valve series NAF

Order codes	Port size	Voltage	Connector type	Weight [kg]
NDA0050	G1/8“ to G3/8“	12V DC	type 22	0.06
NDA0051	G1/8“ to G3/8“	24V DC	type 22	0.06
NDA0106	G1/8“ to G3/8“	24V 50-60 Hz	type 22	0.06
NDA0108	G1/8“ to G3/8“	110V 50-60 Hz	type 22	0.06
NDA0124	G1/8“ to G3/8“	230V 50-60 Hz	type 22	0.06
NDB0501	G1/2“ to G1 1/2“	12V DC	type A	0.10
NDB0502	G1/2“ to G1 1/2“	24V DC	type A	0.10
NDB0507	G1/2“ to G1 1/2“	24V 50-60 Hz	type A	0.10
NDB0509	G1/2“ to G1 1/2“	110V 50-60 Hz	type A	0.10
NDB0510	G1/2“ to G1 1/2“	230V 50-60 Hz	type A	0.10

SOLENOID ACTUATED VALVES SERIES MVDC

STRÁNSKÝ A PETRŽÍK

Small, direct actuated valve 3/2 or 2/2 normally closed with manual override. Valve can be used as a standalone or can be mounted together with other valves as manifold mounting. This manifold can be expanded at any time, valve and set of screws are required.

This valve series contains rubber gaskets.

Series	MVDC
Ports	G1/8“ *
Flow capacity [Nl/min]	60
Working pressure [MPa]	0.1 to 0.7
Power input [W, VA]	2.5W for DC voltage, 6VA for AC voltage (inrush/hold)
Time response [ms]	20
Coil voltage tolerance	±10%
Temperature range [°C]	ambient temperature -5 to +50
Enclosure	IP65 with sealed and fastened connector

*)Port 3 is covered by plastic nut which is used as exhaust

5

Order codes

PMVDC 220 3E1 A220

Size	
220	series MVDC 220, thread G1/8“

Function		
2E1	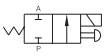	2/2 normally closed
3E1		3/2 normally closed

Voltage	
D12	12 V DC ± 10%
D24	24 V DC ± 10%
A220	230 V AC ± 10%, 50-60 Hz
A24	24 V AC ± 10%, 50-60 Hz

Supply contains connector(s).

Order codes of manifold screw sets

PMVDC 220 - M 1

Screw set	
1	for first valve
X	for next valve in manifold

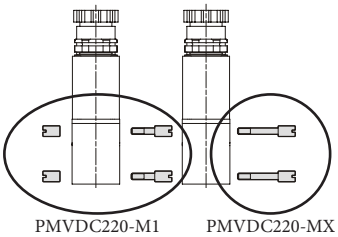

PMVDC220-M1 PMVDC220-MX

The screw sets are necessary for assembly the manifold of the valves. There are two sets available - set for first valve, which contains 2 nuts and 2 short screws and set for next valve, which contains 2 long screws - the required number of sets for next valves is about one set less than the total number of valves in the assembly (for example for 4 valves in manifold, 1 set of PMVDC220-M1 and 3 sets of PMVDC220-MX are required).

Order code of bracket

PMVDC 220 - B

Bracket type	
B	bottom bracket

Bracket is attached to the bottom of the valve and holes for fixing of the assembly of bracket and valve are accessible from the upper side (they are next to the valve). Bracket can be used for standalone valves as well as for manifolds (for first and the last valve in manifold).

Dimensions of valve series MVDC

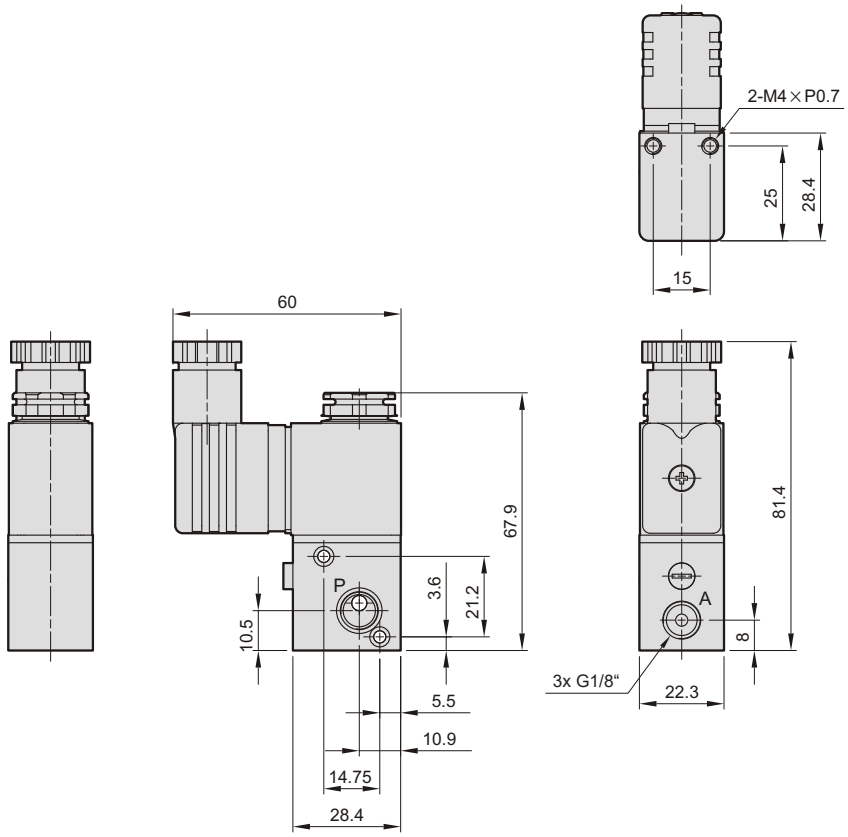

Weight [kg]
0.155

Dimensions of valve series MVDC with bracket

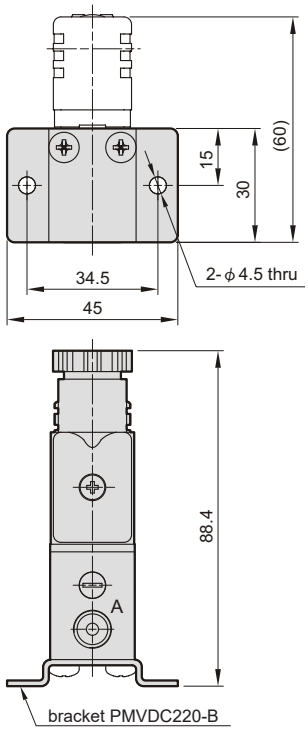

SOLENOID ACTUATED VALVES
SERIES MBS

STRÁNSKÝ A PETRŽÍK

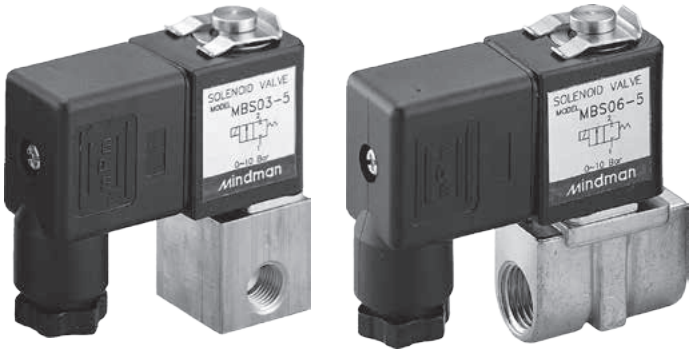

Direct solenoid actuated valve 2/2 normally closed with orifice 1 to 2.4 mm. The following sealing are available: NBR, EPDM and viton (teflon on request). Available fluid: air, inert gas, water, vacuum, oil, etc. Coil with Ex approval EExm II T4, or EEx ia II C T6 PTB are available on request.

Series	MBS				
Ports	G1/8“, G1/4“				
Size	1	2	3	4	5
Flow capacity [Nl/min]	30	50	90	140	180
Working pressure [MPa] for AC voltage	0 to 4.0	0 to 3.5	0 to 3.0	0 to 2.5	0 to 2.0
Working pressure [MPa] for DC voltage	0 to 3.0	0 to 2.4	0 to 1.2	0 to 1.0	0 to 0.7
Power input [W, VA]	6.8W for DC voltage, 8VA for AC voltage - inrush, 6VA hold				
Coil voltage tolerance	±8%				
Temperature range [°C]	ambient temperature -15 to +50, medium temperature -5 to +80 for NBR sealing, , -10 to +120 for EPDM and viton sealing				
Enclosure	IP65 with sealed and fastened connector				
Installing position	free, coil upright is recommended				
Housing material	brass				

5

Order codes

P MBS 03 2 N 3 D D24

Series	
MBS	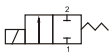 2/2 normally closed

Thread	
03	G1/8“
06	G1/4“

Size	
1	flow cap. 30 Nl/min
2	flow cap. 50 Nl/min
3	flow cap. 90 Nl/min
4	flow cap. 140 Nl/min
5	flow cap. 180 Nl/min

Sealing	
N	NBR
J	EPDM
V	Viton

Connector	
	standard
D	s LED

Voltage	
D12	12 V DC
D24	24 V DC
A220	230 V AC 50-60 Hz
A24	24 V AC 50-60 Hz

Supply contains connector.

Dimensions

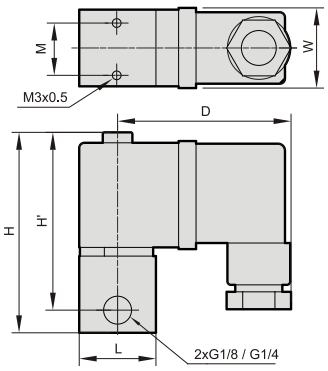

Ports thread	D	H	H‘	L	M	W	Weight [kg]
G1/8“	50	57	51	□22	15	23	0.15
G1/4“	50	61	51	33	11.2	23	0.15

Direct solenoid actuated valve 2/2 normally closed with orifice up to 4 mm, as extension of series MBS. The following sealing are available: NBR, EPDM and viton (teflon and other on request). Available fluid: air, inert gas, water, vacuum, oil, etc. Coil with Ex approval EExm II T4, or EEx ia II C T6 PTB are available on request.

Series	MCS				
Ports	G1/4“, G3/8“, G1/2“				
Size	1	2	3	4	5
Flow capacity [Nl/min]	120	180	240	370	530
Working pressure [MPa] for AC voltage	0 to 4.0	0 to 3.0	0 to 2.0	0 to 1.5	0 to 1.0
Working pressure [MPa] for DC voltage	0 to 3.0	0 to 2.0	0 to 1.5	0 to 1.0	0 to 0.7
Power input [W, VA]	18.5W for DC voltage, 46VA for AC voltage - inrush, 23VA hold				
Coil voltage tolerance	±8%				
Temperature range [°C]	ambient temperature -15 to +50, medium temperature -5 to +80 for NBR sealing, -10 to +145 for EPDM sealing and -10 to +160 for viton sealing				
Enclosure	IP65 with sealed and fastened connector				
Installing position	free, coil upright is recommended				
Housing material	brass				

5

Order codes

P MCS 06 2 N 5 D D24

Series	
MCS	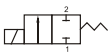 2/2 normally closed

Thread	
06	G1/4“
10	G3/8“
15	G1/2“

Size	
1	flow cap. 120 Nl/min
2	flow cap. 180 Nl/min
3	flow cap. 240 Nl/min
4	flow cap. 370 Nl/min
5	flow cap. 530 Nl/min

Sealing	
N	NBR
J	EPDM
V	Viton

Connector	
	standard
D	s LED

Voltage	
D12	12 V DC
D24	24 V DC
A220	230 V AC 50-60 Hz
A24	24 V AC 50-60 Hz

Supply contains connector.

Dimensions

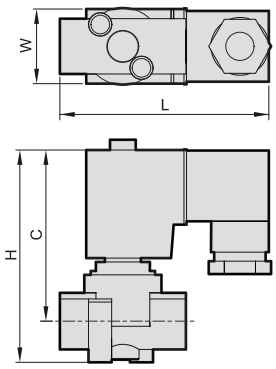

Ports thread	L	H	C	W	Weight [kg]
G1/4“	49	86	71	36	0.4
G3/8“	49	86	71	36	0.4
G1/2“	56	86	73	36	0.4

STRÁNSKÝ A PETRŽÍK

Standard conncector type 22 with cable grommet PG9

Order codes	Type	Voltage [V]	Wiring	Colour	Weight [kg]
N230-363	standard	up to 250	—	black	0.02
N230-391	with red LED	10 to 50	a	transparent	0.02
N230-392	with red LED and varistor	10 to 30	b	transparent	0.02
N230-393	with red LED	70 to 250	a	transparent	0.02
N230-394	with red LED and varistor	70 to 250	b	transparent	0.02

Wiring

Wiring a

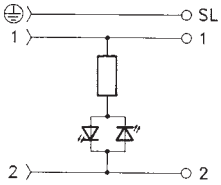

Wiring b

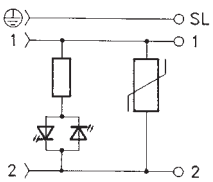

Connector DIN 43650, form A, type 30 with cable grommet PG9

Order codes	Type	Voltage [V]	Wiring	Colour	Weight [kg]
N230-592	standard	up to 250	—	grey	0.02
N230-582	with red LED	10 to 50	a	transparent	0.02
N230-567	with red LED and varistor	10 to 30	b	transparent	0.02
N230-584	with red LED	70 to 250	a	transparent	0.02
N230-585	with red LED and varistor	70 to 250	b	transparent	0.02

Plug connector with cable for valve series MVSY

Order codes	Type
PMVSY-C5	straight, cable 5 m
PMVSY-C10	straight, cable 10 m

Cables and connectors for Fieldbus system series MVE

Order codes	Type	1st side	2nd side
PM125R-WB-PVC-2M	Cable with connector M12. 5 pins, B coded, length 2m, (supply of SI unit)		
PM124R-RJD-PVC-3M	Cable with connector M12, 4 pins, D coded, with RJ45 connector, length 3m, (communication of SI unit)		RJ45
PM124R-MD-PVC-3M	Cable with connectors M12, 4 pins, D coded, length 3m, (communication of SI unit)		
PM83R-F-PVC-3M	Cable with connectors M8, 3 pins, length 3m, (digital inputs of DI unit)		
PM124R-FA-PVC-3M	Cable with connectors M12, 4 pins, A coded, length 3m, (digital outputs of DO unit)		
PM124C-MD	Connector M12, 4 pins, D coded, (communication of SI unit)		
PM83C-M	Connector M8, 3 pins, (digital inputs of DI unit)		
PM124C-MA	Connector M12, 4 pins, A coded, (digital outputs of DO unit)		

Individual base VDMA 24345, form A, with side ports

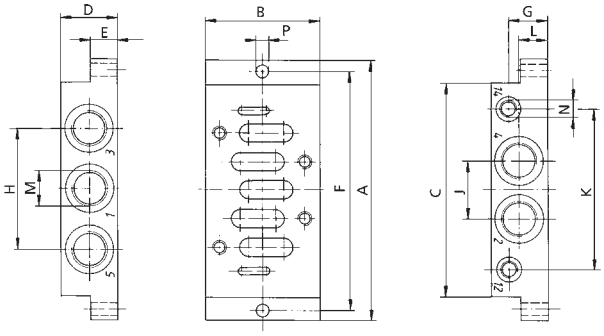

Order codes	Size	A	B	C	D	E	F	G	H	J	K	L	M	N	P	Weight [kg]
N103-544	ISO 1	105	40	78	25	10	90-98	12,5	40	19	55	10	G1/4“	G1/8“	6	0,23
N103-549	ISO 2	126	50	86	30	15	112	20	52	23	68	14	G3/8“	G1/8“	6,5	0,36
N103-545	ISO 3	150	70	110	30	15	136	20	64	32	90	15	G1/2“	G1/8“	6,5	0,59

Manifold block with side and bottom ports

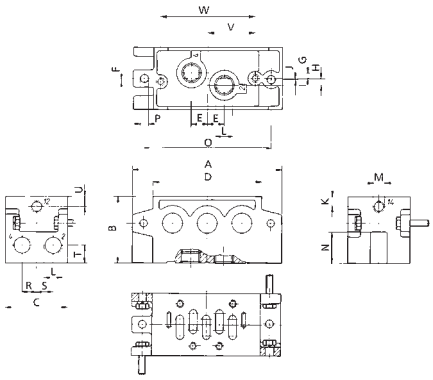

Order codes	Size	A	B	C	D	E	F	G	H	J	K	L	M	N	O	P	R	S	T	U	V	W	Weight [kg]
N239-241	ISO 1	110	50	43	84	13	3	1.5	7.5	1.2	10	G1/4“	G1/8“	23	95	5.4	9.5	12	13	10	35.5	71	0.40
N239-245	ISO 2	135	60	56	98.5	15	3	5	6	1	9	G3/8“	G1/8“	28	115	6.6	13	15	16	9	43	86	0.60
N239-249	ISO 3	190	66	71	140	19	3	6	8	1.3	9.5	G1/2“	G1/8“	32	168	8.6	16.5	19	18	9.5	65	130	1.20

End plate kit VDMA 24345, form D for manifold blocks

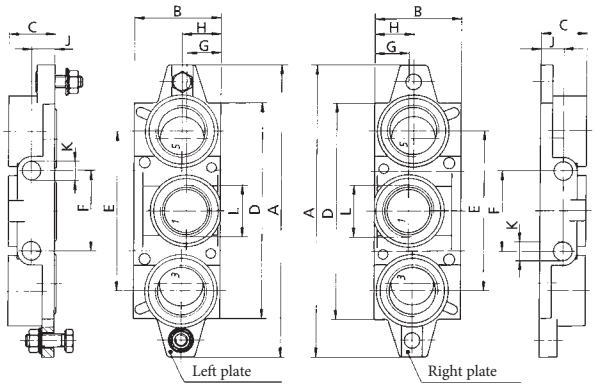

Order codes	Size	A	B	C	D	E	F	G	H	J	K	L	Weight [kg]
N239-257	ISO 1	109	46	22	85	56	28	22	25	10.5	7	G3/8“	0.30
N239-255	ISO 2	135	47	26	98.5	68	35	24	25	12.5	9	G1/2“	0.40
N239-259	ISO 3	190	56	32	140	104	52	22	25	12.5	12	G1“	0.70

MECHANICALLY AND PNEUMATICALLY ACTUATED VALVES - CONTENTS

Manually actuated 3/2, 4/2, 5/2, 4/3 and 5/3 function valves

Series MVMB and MVMC for panel mounting 6-2
G1/8", G1/4"

Series MVHB with vertical lever 6-4
G1/4", G3/8", G1/2"

Series Z22 with vertical lever 6-5
G1/4"

Series MVHC with twist lever 6-6
G1/4", G3/8", G1/2"

Lever valve series, draw bar valve series 6-7
G1/4"

Twist lever valve series 6-8
G1/4"

Two hand safety valve 6-9
G1/8"

Two-handed safety valves 6-10
G1/4"

Foot actuated 3/2, 4/2 and 5/2 function valves

Series MVFA 6-11
G1/4"

Other foot series 6-12
G1/4", 4/2, 6/4

Mechanically actuated 3/2 and 5/2 function valves

Stem valves 6-13
G1/8"

Stem valves series LV7 6-14
G1/4"

Roller lever valves 6-15
G1/8"

Roller lever valves with idle return 6-16
G1/8"

Roller lever valves series LV7 6-17
G1/4"

Pneumatically actuated 3/2, 5/2 and 5/3 function valves

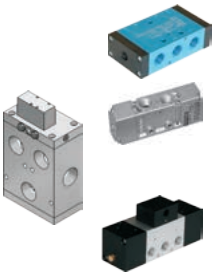

Series K 6-18
G1/8", G1/4", G3/8"

Series MVAA 6-20
G1/4", G1/2"

High flow valve series 6-22
G1", G1 1/2"

Flip-flop valve 6-24
G1/4"

MANUALLY ACTUATED VALVES SERIES MVMB AND MVMC FOR PANEL MOUNTING

STRÁNSKÝ A PETRŽÍK

The new valve series, which replaces the old valve series for panel mounting with replaceable actuators. basic usable features are kept and brings some improvements such as bigger flow capacity, better accessibility and not least also better comfort during mounting and changing of actuators. Bigger actuators also brings the better user comfort during the actuating. The valves can be mounted into the panel with hole dia. 25 mm, or by using holes on the valve body. The big variability allows also changing of actuator anytime during operation - just turn off/on 2 screws on the side of valve and actuator is unlocked/locked.

This valve series contains rubber gaskets.

Series	MVMC 210	MVMB 220 3	MVMB 220 4
Ports	G1/8“	G1/4“	G1/4“ (G1/8“ for exhaust ports 3 and 5)
The way of actuation	direct	indirect (with pilot valve)	indirect (with pilot valve)
Actuating force at 0.6 MPa [N]	30	20	20
Flow capacity [Nl/min]	1050	1000	1000
Working pressure [MPa]	0 to 0.99	0.15 to 0.8	0.15 to 0.8
Weight [kg]	0.155	0.21	0.18
Temperature range [°C]	ambient temperature -5 to +60		

Order codes of valves

6

PMVM B2203

	Function	
C2103		Series MVMC, thread G1/8“, 3/2 normally closed and opened
B2203	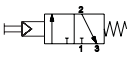	Series MVMB, thread G1/4“ 3/2 normally closed
B2204	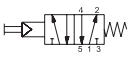	Series MVMB, thread G1/4“ 5/2

Valve PMVMC2103 can be connected as normally open or normally closed. The air supply should be connected to the port marked NC or NO.

Order codes of actuators

PMVM BPPR

BPPx

BPBx

BEB

	Function
BPPB	push button black
BPPR	push button red
BPPG	push button green
BPBB	mushroom push button black
BPBR	mushroom push button red
BPBG	mushroom push button green
BEB	twist to release mushroom push button red
BTB	selector switch black
BLB	extended selector switch black
CR1	roller lever (only for PMVMC2103 valve)

BTB

BLB

CR1

Dimensions

Type MVMB2203

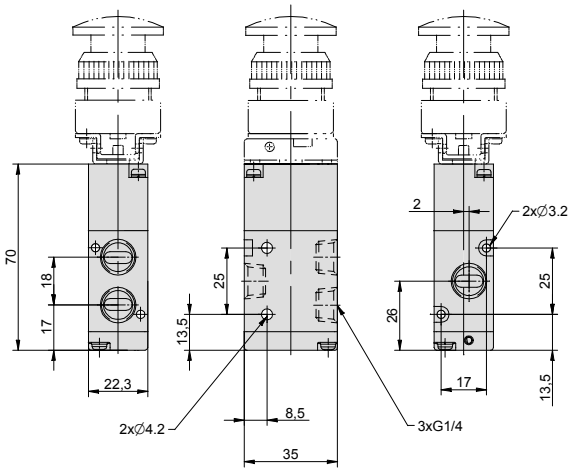

Type MVMC2103

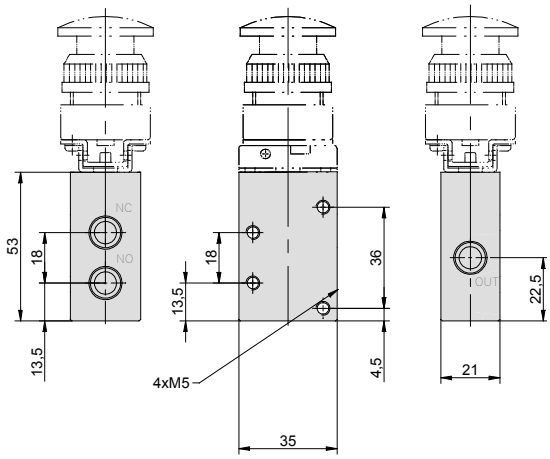

Type MVMB2204

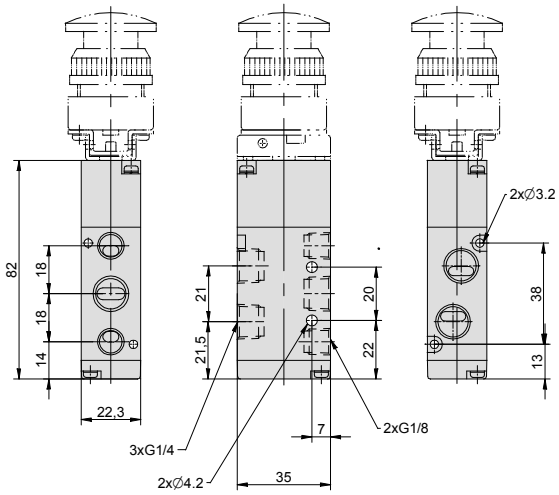

Type MVMC2103 with PMVMCR1 roller lever actuator

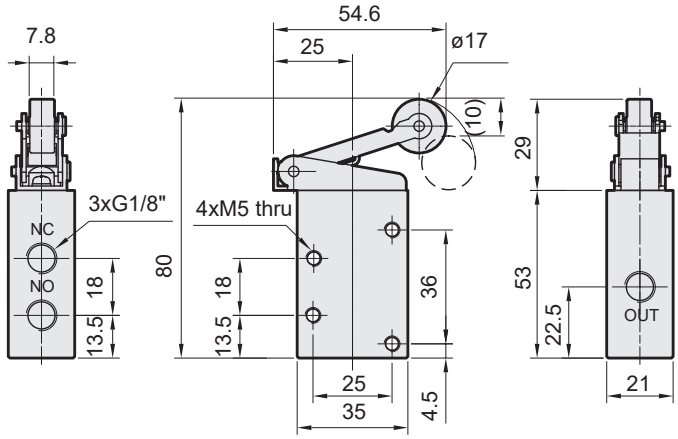

Actuators

MVMBPPx

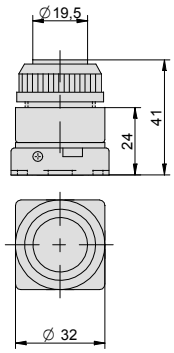

MVMBPBx

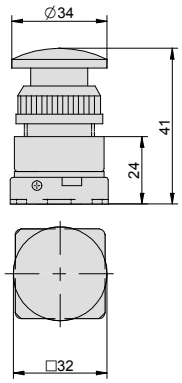

MVMBEB

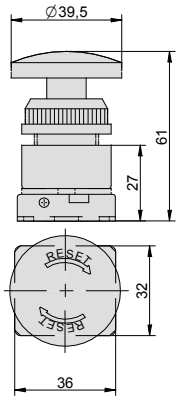

MVMBTB

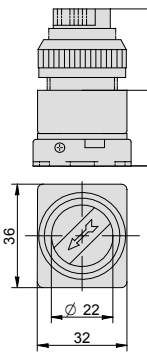

MVMBLB

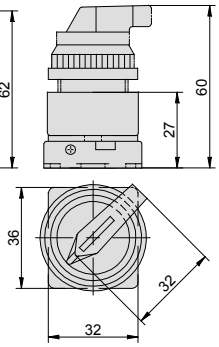

Panel mounting hole

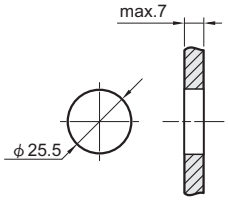

Valves are available with or without detent as well as functions 5/2 and 5/3 with closed, pressured or exhausted centre. Valves can be mounted by using the holes on the valve body, type MVHB 220 can be also mounted into the panel with hole dia. 18.5 mm.

This valve series contains rubber gaskets.

Series	MVHB 220	MVHB 300	MVHB 500
Ports	G1/4“ (G1/8“ for exhaust ports 3 and 5)	G3/8”	G1/2“
Flow capacity [Nl/min]	1000, or 890 for 5/3 function	1880 for 5/2 and 5/3 function	2270 for 5/2 and 5/3 function
Working pressure [MPa]	0 to 0.80	0 to 1.20	0 to 1.20
Weight [kg]	0.193, or 0.234 for 5/3 function	0.438, or 0.487 for 5/3 function	0.519, or 0.560 for 5/3 function
Temperature range [°C]	ambient temperature -5 to +60		

Order codes

PMVHB 220 4TV SPM

Size	
220	series MVHB 220, thread G1/4“
300	series MVHB 300, thread G3/8“
500	series MVHB 500, thread G1/2“

Function		
M	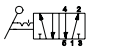	5/2 with detent
SPM		5/2 without detent
CM	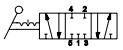	5/3 with detent, closed centre
CSPM	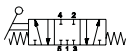	5/3 without detent, closed centre

Function		
PM	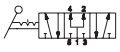	5/3 with detent, pressured centre
PSPM	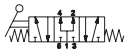	5/3 without detent, pressured centre
RM	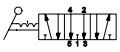	5/3 with detent, exhausted centre
RSPM	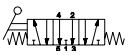	5/3 without detent, exhausted centre

Dimensions

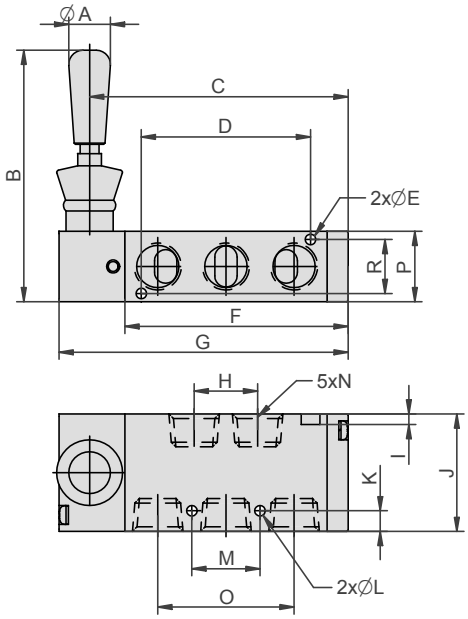

Series	Function	A	B	C	D	E	F	G	H	I	J	K	L	M	N	O	P	R
220	M, SPM	18	95	67	—	—	57	77	21	—	35	7	4.2	20	G1/4“	36	22.3	—
	CM, PM, RM	18	95	74.5	—	—	59	85	21	—	35	7	4.2	20	G1/4“	36	22.3	—
	CSPM, PSPM, RSPM	18	95	86.5	—	—	71	97	21	—	35	7	4.2	20	G1/4“	36	22.3	—
300	M, SPM	18	107	—	60	3.2	—	114	30	—	47	4.7	4.5	26	G3/8“	52	30	25
	CM, PM, RM	18	107	110	60	3.2	—	123	30	—	47	4.7	4.5	26	G3/8“	52	30	25
	CSPM, PSPM, RSPM	18	107	129	60	3.2	—	142	30	—	47	4.7	4.5	26	G3/8“	52	30	25
500	M, SPM, CM, PM, RM	18	107	111	72	4.5	95	124	27	4.5	50	8.8	4.5	29	G1/2“	58	30	23
	CSPM, PSPM, RSPM	18	107	129	72	4.5	114	142	27	4.5	50	8.8	4.5	29	G1/2“	58	30	23

Valves series MVHB 220 can be mounted into the panel or by holes in the valve body. Valves series MVHB 500 can be mounted only by holes in the valve body.

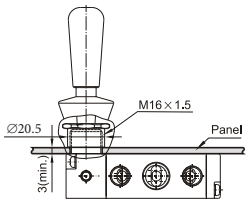

MANUALLY ACTUATED VALVES SERIES Z22 WITH VERTICAL LEVER

Valves are available with or without detent as well as functions 5/2 and 5/3 with closed or exhausted centre.

This valve series contains rubber gaskets.

Series	Z22 5/2	Z22 5/3
Ports	G1/4“	
Flow capacity [Nl/min]	1000	
Working pressure [MPa]	0 to 1.0	
Temperature range [°C]	-10 to +60	
Medium	modified compressed air	
Weight [kg]	0.31	0.38

Order codes

Type	5/2
Without detent	NZ22 VA45 2OG0 0000
With detent	NZ22 VD45 2OG0 0000

Type	5/3
Without detent, exhausted centre	NZ22 VA55 2OG0 0000
With detent, exhausted centre	NZ22 VD55 2OG0 0000
Without detent, closed centre	NZ22 VA65 2OG0 0000
With detent, closed centre	NZ22 VD65 2OG0 0000

6

Dimensions

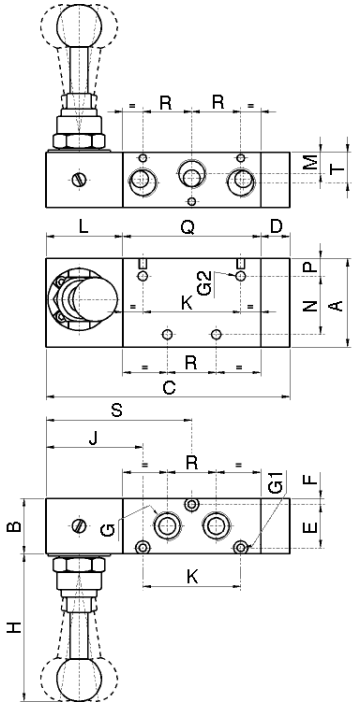

Type	A	B	C	D	E	F	G	G1	G2	H	J	K	L
NZ22 Vx45 ...	40	25	109.5	13	19.6	2.7	G1/4“	3.3	4.2	67	43.5	44	34.5
NZ22 VAx5 ...	40	25	132.5	36	19.6	2.7	G1/4“	3.3	4.2	67	43.5	44	34.5
NZ22 VDx5 ...	40	25	109.5	13	19.6	2.7	G1/4“	3.3	4.2	67	43.5	44	34.5

Type	M	N	P	Q	R	S	T
NZ22 Vx45 ...	9.8	26.3	8	62	22	65.5	13.8
NZ22 VAx5 ...	9.8	26.3	8	62	22	65.5	13.8
NZ22 VDx5 ...	9.8	26.3	8	62	22	65.5	13.8

MANUALLY ACTUATED VALVES
SERIES MVHC WITH TWIST LEVER

STRÁNSKÝ A PETRŽÍK

Valves are available with functions 4/2 and 4/3 with centre closed and exhausted position, with detent positions.

This valve series contains rubber gaskets.

Series	MVHC 200	MVHC 300	MVHC 400
Ports	G1/4“	G3/8“	G1/2“
Flow capacity [Nl/min]	410	1100	3000
Working pressure [MPa]	0 to 0.99	0 to 0.99	0 to 0.99
Weight [kg]	0.280	0.420	1.100
Temperature range [°C]	ambient temperature -5 to +60		

Order codes - valves

PMVHC 3 0 2 4H

	Size
2	series MVHC 200, thread G1/4“
3	series MVHC 300, thread G3/8“
4	series MVHC 400, thread G1/2“

	Function
0	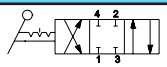 4/3 with closed centre
1	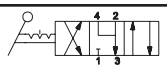 4/3 with exhausted centre
2	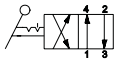 4/2

- mounting nut

Series	Order codes
200	PMVHC2M
300	PMVHC3M
400	PMVHC4M

Dimensions

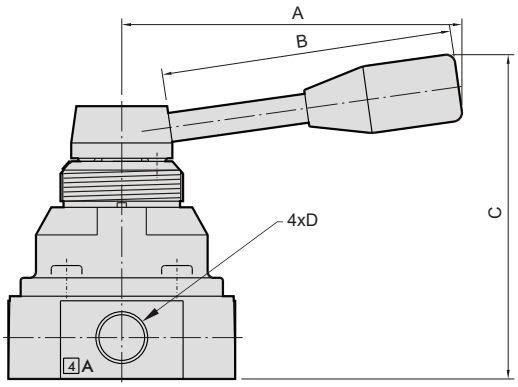

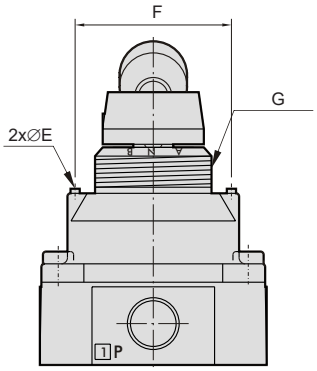

Mounting nut
(to be ordered separately)

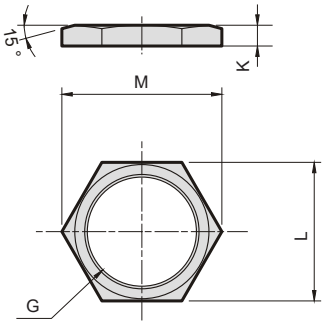

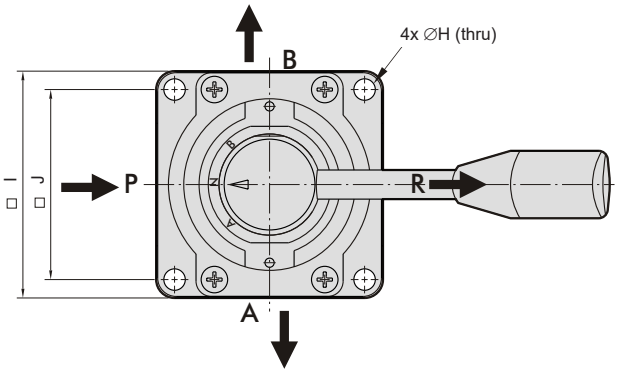

Series	A	B	C	D	E	F	G	H	I	J	K	L	M
200	103		88	G1/4“	3	40	M33x1.5	5.5	62	49	6	41	46
300	111	95	106	G3/8“	3	51	M40x1.5	7	74	62	6	50	57
400	111	95	124	G1/2“	3	64	M50x1.5	6.5	102	88	8	55	63

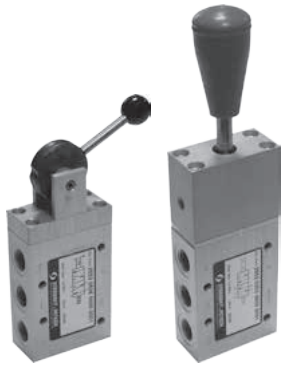

Lever valves are actuated by 120° lever turning. Both positions are detent. Draw bar valves are actuated by pressing the draw bar. Return to starting position is by pulling of draw bar. If the draw bar is during pulling out rotated to right, the force which is need for overcome the detent will be lower. Draw bar valves can be produced from stainless steel on request.

This valve series contains rubber gaskets.

Ports	G1/4“
Flow capacity [Nl/min]	800
Working pressure [MPa]	0.2 to 1.0
The way of actuation	direct
Temperature range [°C]	-20 to +80
Working medium	modified compressed air
Weight [kg]	0.26 for 3/2 function, 0.32 for 5/2 function

Order codes

Ports	G1/4“
Lever valve 3/2	2532 0505 0600 0001
Lever valve 5/2	2552 0505 0600 0001

Ports	G1/4“	G1/4“ stainless steel
Draw bar valve 3/2	2532 0303 0600 0001	2532 0303 0600 0002
Draw bar valve 5/2	2552 0303 0600 0001	2552 0303 0600 0002

6

Dimensions

Lever valve series

Type 3/2

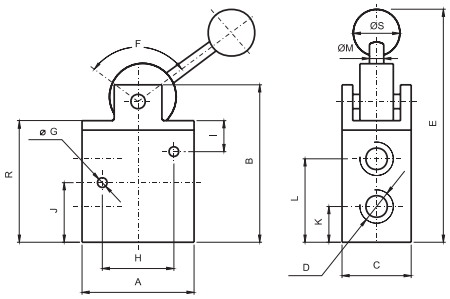

Type 5/2

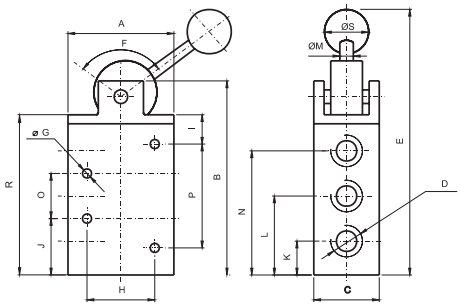

Type	A	B	C	D	E	F	G	H	I	J	K	L	M	N	O	P	R	S
3/2	50	85	25	G1/4“	127	120	4.5	36	23	25	14	36	5	–	–	–	60	16
5/2	50	107	25	G1/4“	149	120	4.5	36	23	25	14	36	5	58	22	46	82	16

Draw bar valve series

Type 3/2

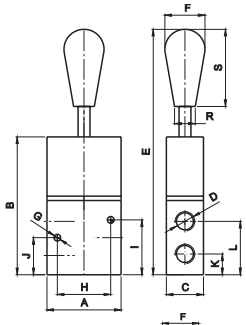

Type 5/2

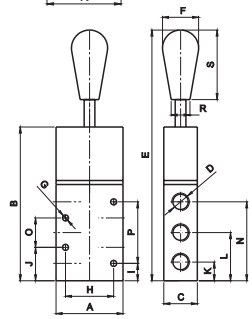

Type	A	B	C	D	E	F	G	H	I	J	K	L	N	O	P	R	S
3/2	50	93	25	G1/4“	166	27	4.5	36	37	25	14	36	–	–	–	14	52
5/2	50	115	25	G1/4“	188	27	4.5	36	13	25	14	36	59	22	46	14	52

The valve with a lever is operated by turning the lever by 110°. Both positions are detent. We also produce a version with the hole for securing the valve (eg with a padlock) in the initial position.

This valve series contains rubber gaskets.

Ports	G1/4“
Flow capacity [Nl/min]	800
Working pressure [MPa]	0.2 to 1.0
The way of actuation	direct
Temperature range [°C]	-20 to +80
Working medium	modified compressed air
Weight [kg]	0.43 for 3/2 function, 0.51 for 5/2 function

Order codes

Ports	G1/4“
Twist lever valve 3/2	2532 0505 0600 0005
Twist lever valve 5/2	2552 0505 0600 0006

Ports	G1/4“
Twist lever valve 3/2 with hole for securing	2532 0505 0600 0004
Twist lever valve 5/2 with hole for securing	2552 0505 0600 0007

6

Dimensions

Type 3/2

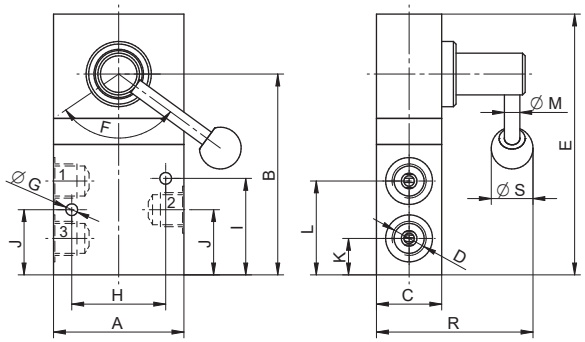

Type 5/2

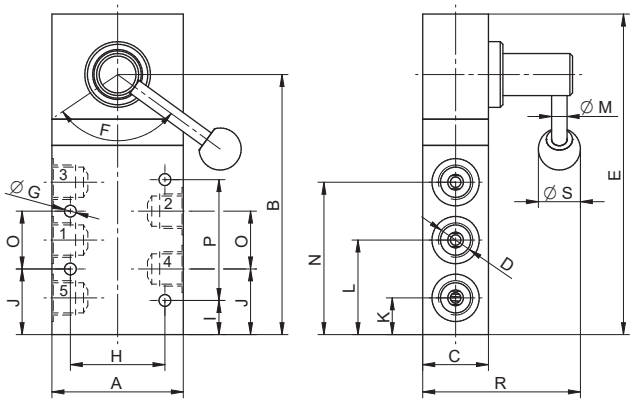

Type	A	B	C	D	E	F	G	H	I	J	K	L	M	N	O	P	R	S	X	Z
3/2	50	77	25	G1/4“	100	110	4.5	36	37	25	14	36	5	–	–	–	60	16	35	5
5/2	50	99	25	G1/4“	122	110	4.5	36	13	25	14	36	5	58	22	46	60	16	35	5

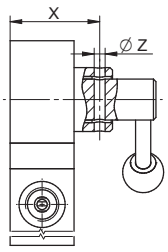

Version with hole for securing the basic position

TWO HAND SAFETY VALVE

This valve is used to pilot high-flow directional control valves connected to machines which have a high risk of injuries to the hands.
The machine operator must simultaneously operate, in a safe area, two three-way manual valves for correct operation. The safety valve will ignore a single depression of one of the manual valves. To repeat the cycle both pilot signals must be exhausted and the manual valves simultaneously actuated again.

The two-hand safety valve is sold with CE -certification (compliant to Machinery Directives EEC 89/392, 91/368, 93/44, 96/68 and to Norm EN 574, level 1).

This valve series contains rubber gaskets.

Ports	G1/8“
Flow capacity [Nl/min]	100
Working pressure [MPa]	0.3 to 0.8
Temperature range [°C]	-10 to +60
Max. delay between two actuating signals [s]	0.5
Working medium	modified compressed air
Weight [kg]	0.40

Order codes

Ports	G1/8“
Two hand safety valve 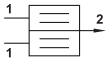	2899 0029 9040 0004

Max. delay between two actuating signals related to the pressure

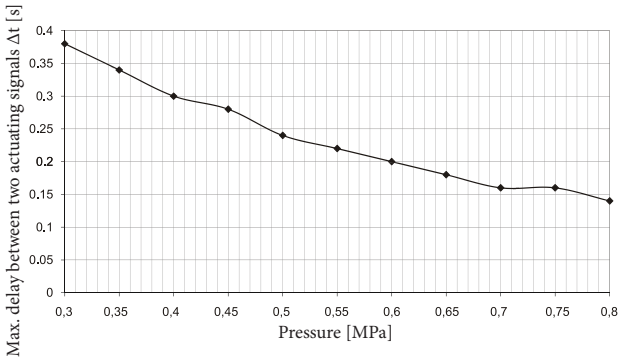

Dimensions

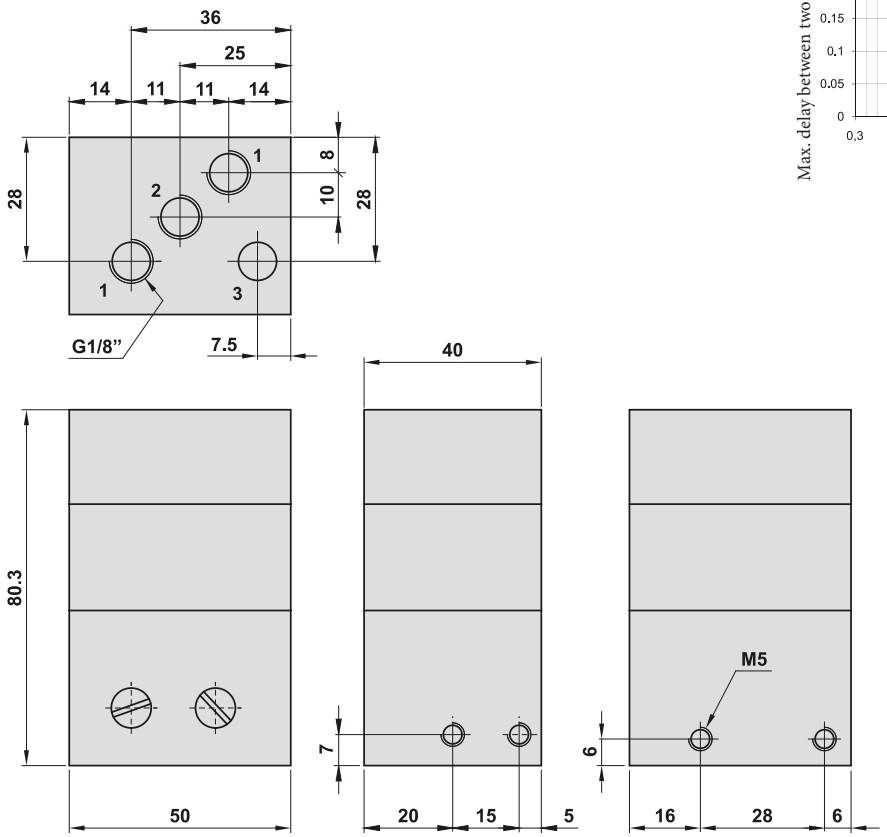

Connection

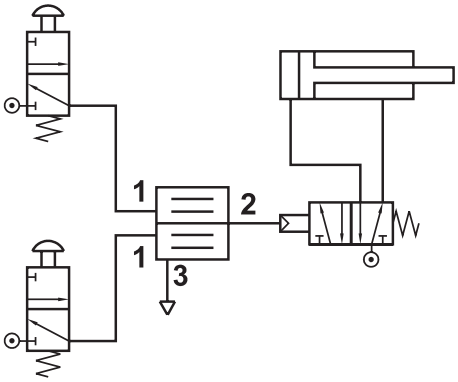

Note: M5 threaded holes are for fixing the valve

MANUALLY ACTUATED TWO HAND SAFETY VALVES

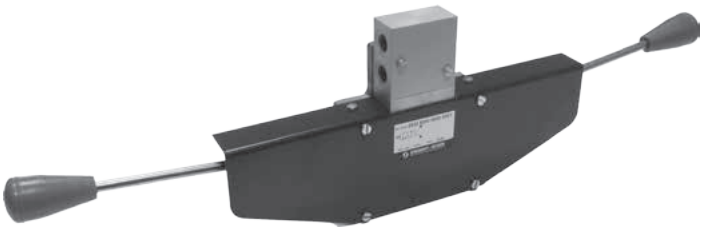

This safety valve is used in applications, where controlling by two hands at a time is necessary due to safety reasons (presses and etc.). Valve is actuated only when both levers are pressed together. If one lever will be pressed permanently, valve will not be actuated when the second lever will be pressed.

This valve series contains rubber gaskets.

Ports	G1/4“
Flow capacity [Nl/min]	800
Working pressure [MPa]	0.2 to 1.0
The way of actuation	direct
Temperature range [°C]	-20 to +80
Working medium	modified compressed air
Weight [kg]	1.28 for 3/2 function, 1.34 for 5/2 function

Order codes

Ports	G1/4“
Type 3/2	2532 5090 0600 0001
Type 5/2	2552 5090 0600 0001

6

Dimensions

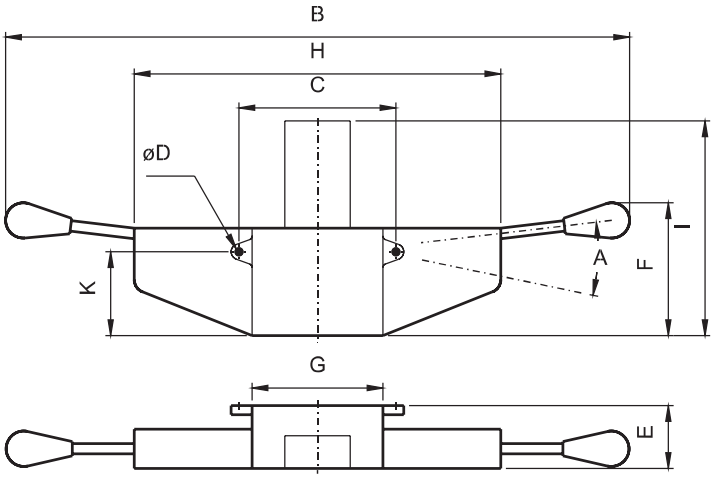

Type	A	B	C	D	E	F	G	H	I	K
3/2	22°	530	118	5.4	48	106	100	280	138	35
5/2	22°	530	118	5.4	48	106	100	280	160	35

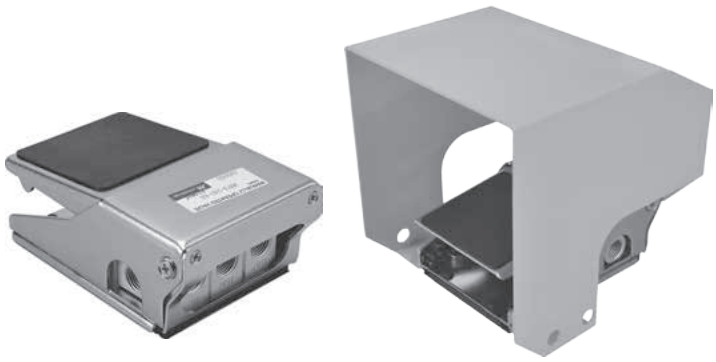

Valves without or with protecting cover are available with 3/2 and 4/2 function with or without detent.

This valve series contains rubber gaskets.

Series	MVFA 240
Ports	G1/4“
Flow capacity [Nl/min]	440
Working pressure [MPa]	0.2 to 0.7
Weight without / with protection cover [kg]	function 230: 0.684/1.426; function 231: 0.739/1.481; function 240: 0.774/1.516
Temperature range [°C]	ambient temperature -5 to +60

Order codes

PMVFA 240 P L

Function		
230		3/2 normally closed
231		3/2 normally opened
240		4/2

Protective cover	
	without protective cover
P	with protective cover

Detent		
		without detent
L	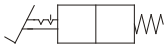	with detent

6

Dimensions

Type without protecting cover

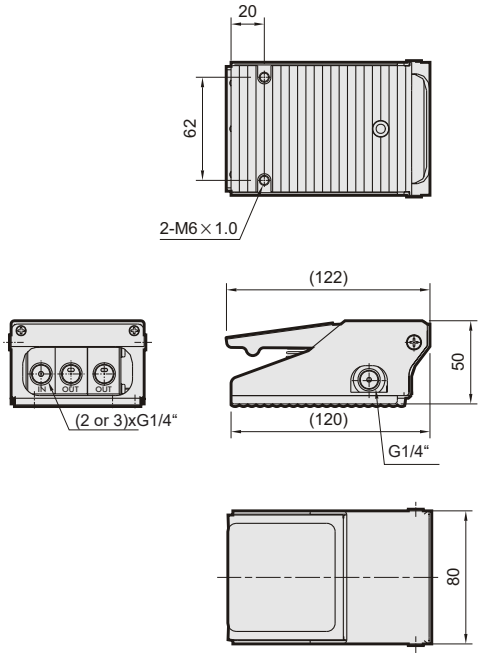

Type with protecting cover

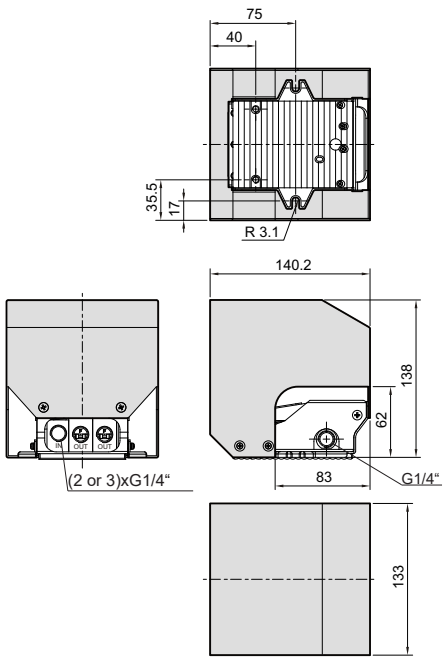

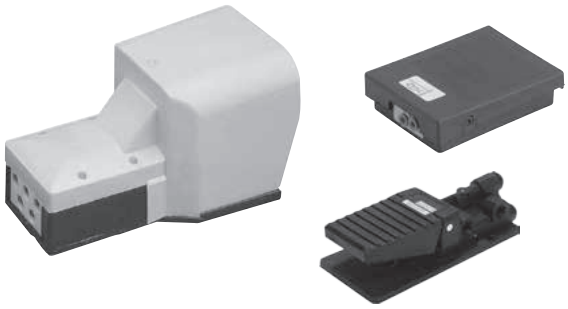

Valves are available with or without protecting cap. Protecting cap protect foot pedal to unwanted activating. Valves with protecting cap are available with or without detent in activated position. Valves without protecting cap are available only without detent.

This valve series contains rubber gaskets.

Type	3/2 without protecting cover	5/2 without protecting cover	5/2 with protecting cover
Ports	tube 4/2	tube 6/4; G1/8“ for exhausts (3.5)	G1/4“
Flow capacity [Nl/min]	100	540	600
Working pressure [MPa]	0.2 to 1.0		
Temperature range [°C]	-20 to +60		
Working medium	modified compressed air		
Weight [kg]	0.18	0.18	1.10

Order codes

Type		Order codes
Type 3/2 without protection cover, for tube 4/2		NZFD FA30 0OL0 0000
Type 5/2 without protection cover, for tube 6/4, exhaust ports G1/8“		2552 4090 3200 0001

Type		Order codes
Type 5/2 with protection cover, thread G1/4“		NZF2 FA40 0OG0 0000
Type 5/2 with protection cover with detent, thread G1/4“		NZF2 FD40 0OG0 0000

Dimensions

Type 3/2 without protecting cover

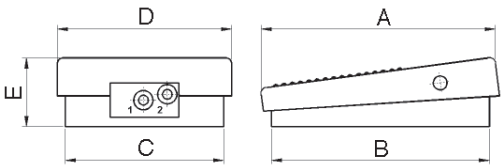

A	B	C	D	E
104	95	76	69	31

Type 5/2 without protecting cover

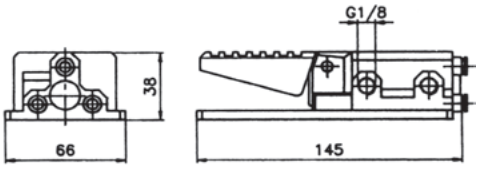

Type 5/2 with protecting cover

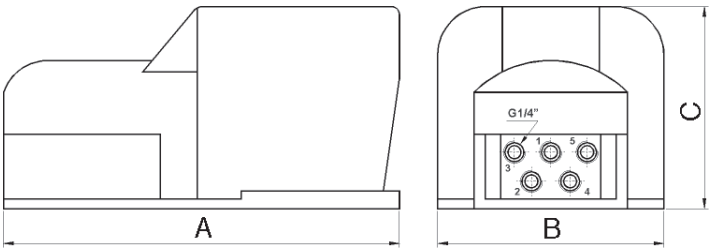

A	B	C
245	140	145

This valve is actuated by pressing down the stem at the axis direction. This valve is not replacement for roller lever valves, which are actuated by rolling the can from the side.

This valve series contains rubber gaskets.

Ports	G1/8“
Flow capacity [Nl/min]	550
Working pressure [MPa]	vacuum to 1.0
Actuating force [N]	33
Temperature range [°C]	-20 to +60
Working medium	modified compressed air
Weight [kg]	0.1 (3/2), 0.13 (5/2)

Order codes

Ports	G1/8“
Valve 3/2	2532 3090 0400 0007
Valve 5/2	2552 3090 0400 0004

6

Dimensions

Valve 3/2

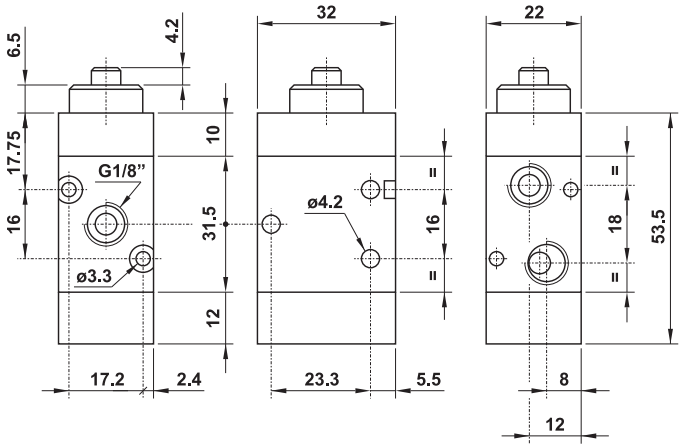

Valve 5/2

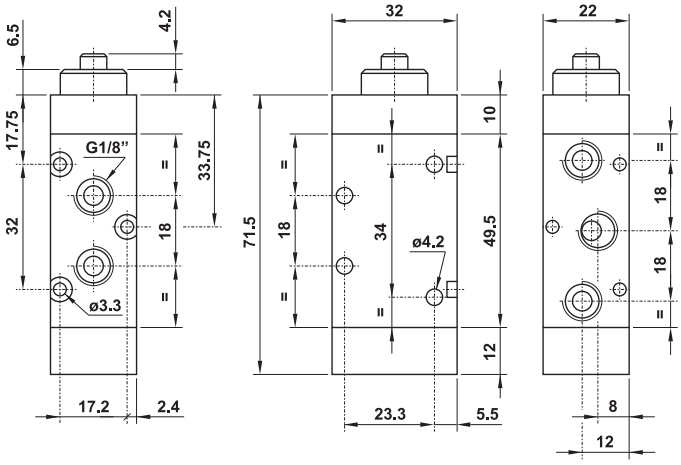

Technical data

Construction / materials

- body - aluminium alloy
- caps - aluminium alloy, technopolymer
- spring - stainless steel
- seals - NBR
- spool - nickel plated aluminium alloy
- internal parts - brass

Flow rate

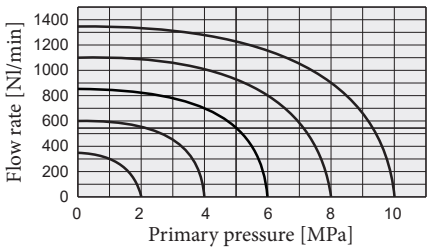

MECHANICALLY ACTUATED STEM VALVES SERIES LV7
- ROBUST DESIGN FOR HARSH CONDITIONS

STRÁNSKÝ A PETRŽÍK

The valve is controlled by pushing the stem in the direction of its axis. It is not possible to activate it by pushing the stem from the side of the valve. The valve is also suitable for smooth and slow changes, when the flow rate is smoothly regulated by pushing on the stem. In the middle of the stroke of the stem, the air flow from the inlet is closed (it does not pass to outlet 2 or outlet 4). In addition to the standard version, a stem valve with an extended spring stroke is also available, where after activating the valve, the stem can be pressed in by another 5 mm without damaging the valve. This variant can be used advantageously for cams that do not move accurately.

Valves series LV7 contains spool and sleeve assembly, which guarantee long lifetime of valve.

Series	LV7
Ports	G1/4“
Flow capacity [Nl/min]	1700
Working pressure [MPa]	vacuum to 2,1
Actuating force [N]	min. 30, max. 300
Temperature range [°C]	medium temperature max. 50, ambient temperature -20 to +50
Weight [kg]	0,42

Order codes

Type	Order code
Valve 5/2	2000 2521 0000 0000
Valve 5/2 with extended stroke 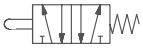	2000 2544 1000 0000

To fully activate the valve, the stem must be pushed in by 5 mm. In the extended stroke version, the stem can be pushed in by another 5 mm without affecting the function.

6

Dimensions

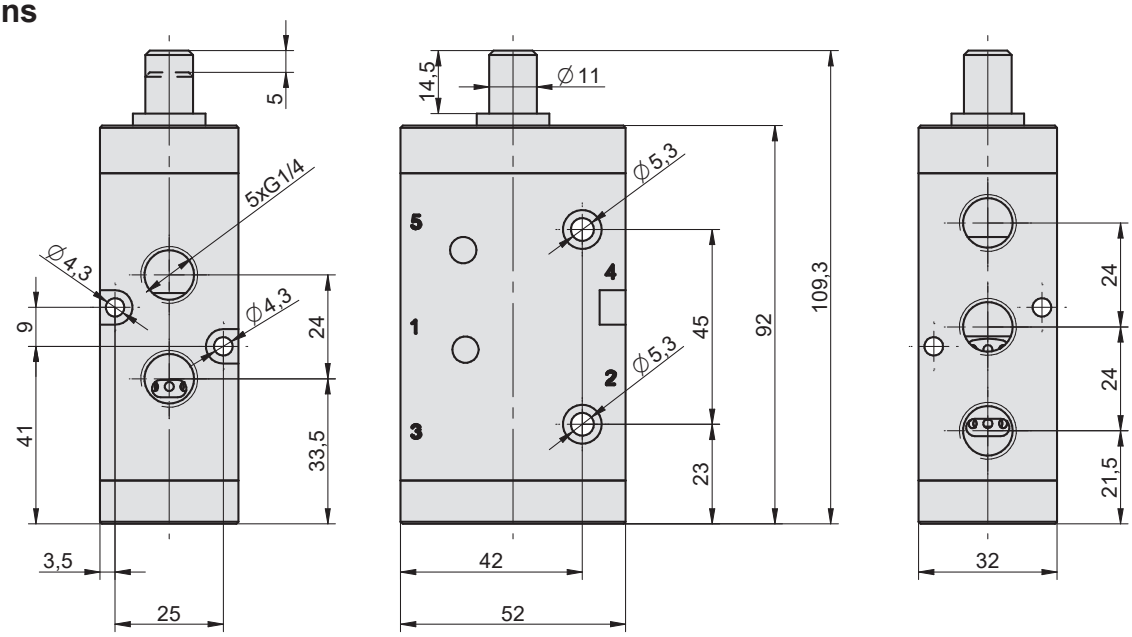

Construction / materials

- body - aluminium alloy
- caps - aluminium alloy, technopolymer
- springs - stainless steel
- seals - Viton®
- spool and internal parts - stainless steel

For more information about spool and sleeve assembly see page 5-2.

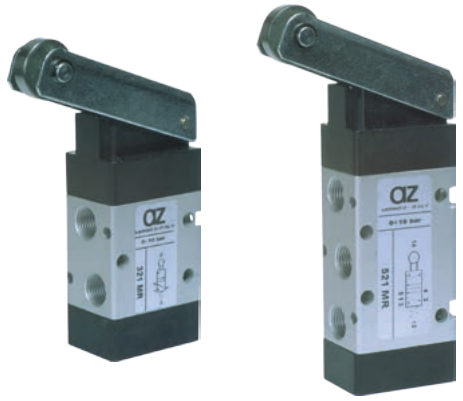

Valves are actuated by rolling the cam from the one or another side of the valve body. There are 3/2 normally closed and 5/2 valves available.

This valve series contains rubber gaskets.

Ports	G1/8“
Flow capacity [Nl/min]	550
Working pressure [MPa]	vacuum to 1.0
Actuating force [N]	10
Temperature range [°C]	-20 to +60
Working medium	modified compressed air
Weight [kg]	0.15 (3/2), 0.18 (5/2)

Order codes

Ports	G1/8“
Valve 3/2	2532 2090 0400 0008
Valve 5/2	2552 2090 0400 0005

We also offer a 3/2 roller lever valve with G1/8“ threads in the MVMC series and you can find it on page 6-2.

6

Dimensions

Valve 3/2

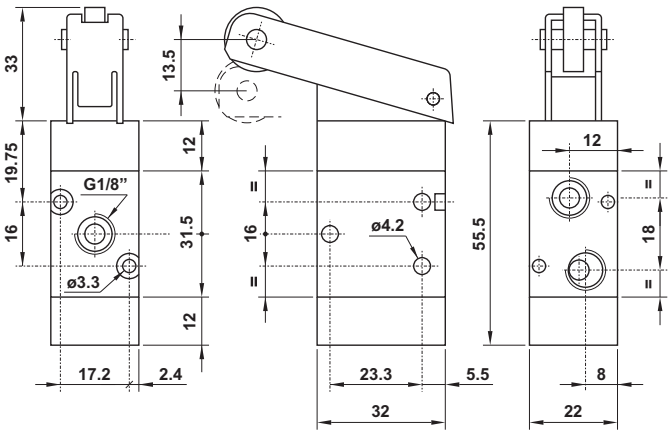

Valve 5/2

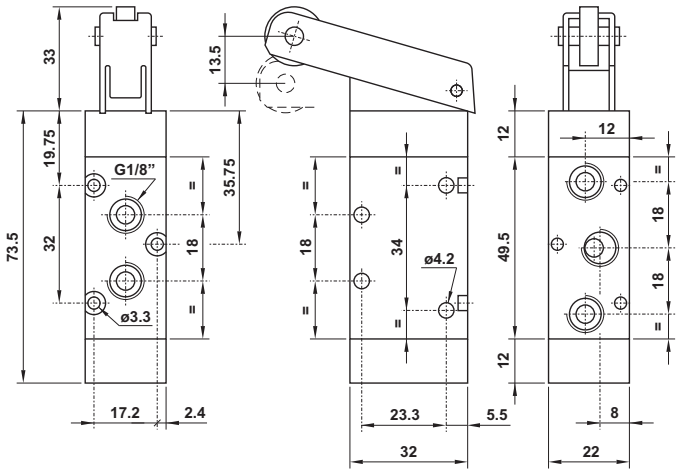

Technical data

Construction / materials

- body - aluminium alloy
- caps - aluminium alloy, technopolymer
- spring - stainless steel
- seals - NBR
- spool - nickel plated aluminium alloy
- internal parts - brass
- lever - zinc plated steel
- roller - bearing

Flow rate

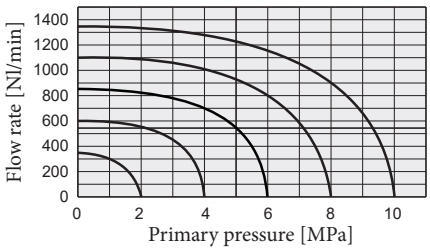

MECHANICALLY ACTUATED ROLLER LEVER VALVES WITH IDLE RETURN

STRÁNSKÝ A PETRŽÍK

Valves are actuated by rolling the cam from the one or another side of the valve body. The cam must go over the roller and release it. During the cam return, the roller will not activate the valve. Those valves are used in pneumatic controlled circuits and everywhere where only one signal about movement is necessary. There are 3/2 normally closed and 5/2 valves available.

This valve series contains rubber gaskets.

Ports	G1/8“
Flow capacity [Nl/min]	550
Working pressure [MPa]	vacuum to 1.0
Actuating force [N]	10
Temperature range [°C]	-20 to +60
Working medium	modified compressed air
Weight [kg]	0.15 (3/2), 0.18 (5/2)

Order codes

Ports	G1/8“
Valve 3/2 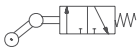	2532 2190 0400 0002
Valve 5/2 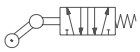	2552 2190 0400 0002

6

Dimensions

Valve 3/2

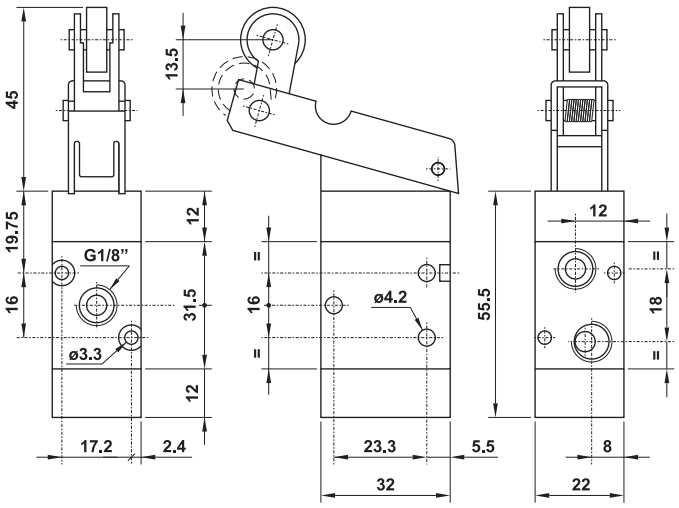

Valve 5/2

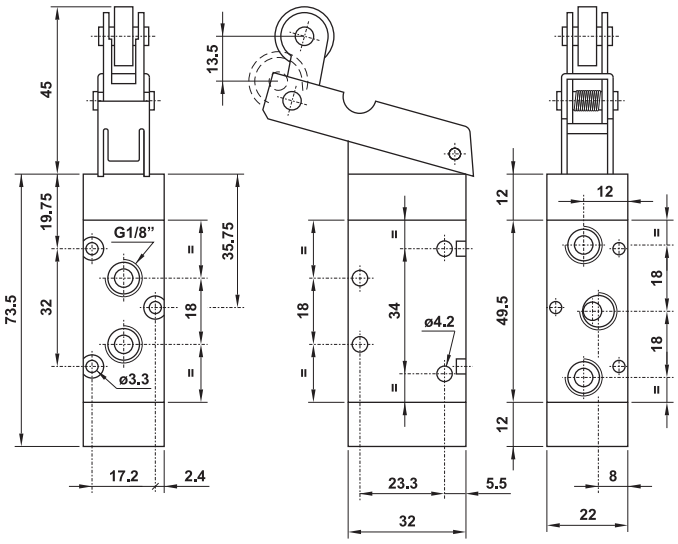

Technical data

Construction / materials

- body - aluminium alloy
- caps - aluminium alloy, technopolymer
- spring - stainless steel
- seals - NBR
- spool - nickel plated aluminium alloy
- internal parts - brass
- lever - zinc plated steel
- roller - bearing

Flow rate

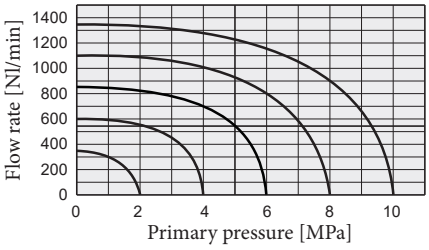

MECHANICALLY ACTUATED ROLLER LEVER VALVES SERIES LV7
- ROBUST DESIGN FOR HARSH CONDITIONS

The valves are activated after the cam is driven from one or the other side of the valve. The valve is also suitable for smooth and slow changes, when pressing on the roller results in smooth flow regulation. In the middle of the roller stroke, the air flow from the inlet is closed (it does not pass to outlet 2 or outlet 4). In addition to the standard version, a roller with an extended spring-loaded stroke is also available, where after activating the valve, the roller can be pressed in by another 11 mm without damaging the distributor. This variant can be used advantageously with cams that do not drive precisely.

Valves series LV7 contains spool and sleeve assembly, which guarantee long lifetime of valve.

Series	LV7
Ports	G1/4“
Flow capacity [Nl/min]	1700
Working pressure [MPa]	vacuum to 2,1
Actuating force [N]	min. 20, max. 200
Temperature range [°C]	medium temperature max. 50, ambient temperature -20 to +50
Weight [kg]	0,66

Order codes

Type	Order code
Valve 5/2	2000 2531 8000 0000
Valve 5/2 with extended stroke	2000 2566 8000 0000

To fully activate the valve, the roller must be pressed in by 11 mm. In the extended stroke version, the roller can be pressed in by another 11 mm without affecting the function.

Dimensions

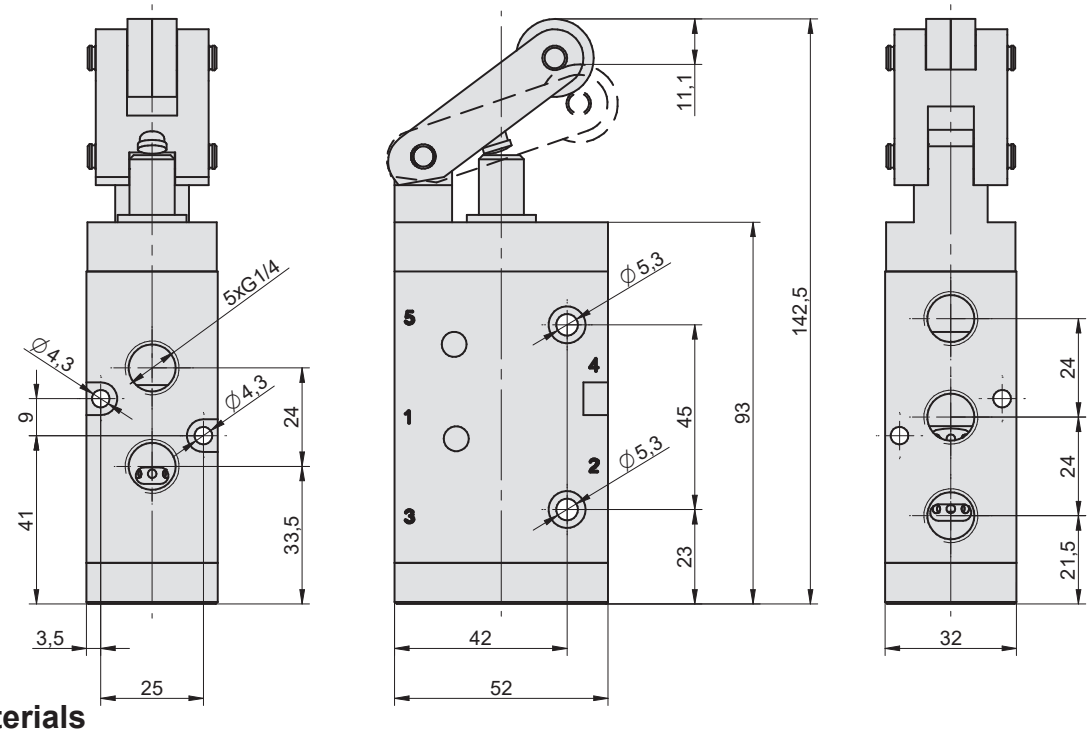

Construction / materials

- body - aluminium alloy
- caps - aluminium alloy, technopolymer, nickel plated steel
- springs - stainless steel
- seals - Viton®
- spool and internal parts - stainless steel
- lever - nickel plated steel
- roller - bearing

For more information about spool and sleeve assembly see page 5-2.

PNEUMATICALLY ACTUATED VALVES SERIES K

STRÁNSKÝ A PETRŽÍK

A new type of pneumatically actuated valve, which offers not only a large flow rate, but also high durability. Valves can be used as standalone or they can be mounted on manifolds.

Valves series K contains spool and sleeve assembly, which guarantee long lifetime of valve.

Series	K1	K2		K3
Port	G1/8“	G1/4“	G3/8“	G1/2“
Port for pilot	G1/8“	G1/8“	G1/8“	G1/8“
Flow capacity [Nl/min]	1000	1700	1700	3500
Working pressure [MPa]	vacuum to 2.1 MPa			
Pilot pressure range [MPa]	0.15 to 1.0			
Temperature range [°C]	medium temperature max. 50, ambient temperature -20 to +50			

6 Order codes

25 527090 06 00 3 000

Function		
52 70 90	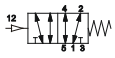	5/2 monostable
52 70 70	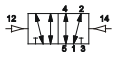	5/2 bistable
53 70 70	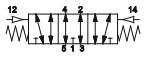	5/3 centre opened position

Series and port		
04 00 2	series K1	thread G1/8“
06 00 3	series K2	thread G1/4“
08 00 3	series K2	thread G3/8“
10 00 4	series K3	thread G1/2“

We make the spool and sleeve assembly from hardened stainless steel. The technical interest is that thanks to the precise grinding and honing of both parts, such accuracy is achieved that the piston in the sleeve moves on the air cushion. This essentially eliminates possible wear and at the same time the piston can be moved very easily and very quickly. The clearance is so small that there are no leaks even without a seal. For more information on spool and sleeve assembly, see page 5-2.

Dimensions of valve series K

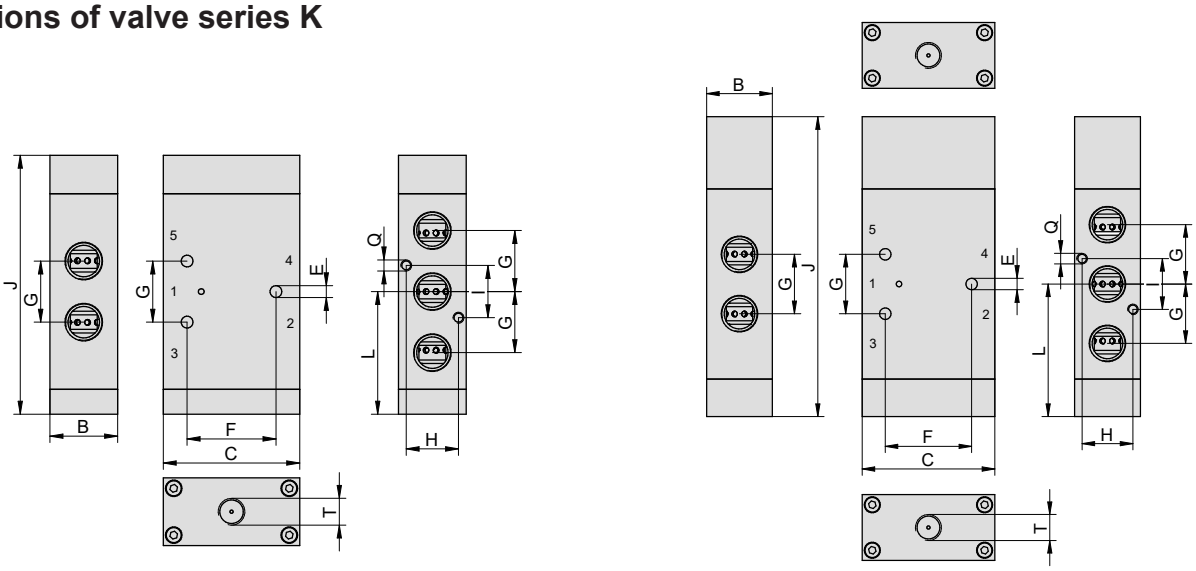

Series	Function	B	C	E	F	G	H	I	J	L	Q	T	Weight [kg]
K1	52 70 90	22	42	3.3	24.4	18	15.8	18	83	39	M3, deep 7	G1/8“	0.21
K1	52 70 70	22	42	3.3	24.4	18	15.8	18	101	44	M3, deep 7	G1/8“	0.25
K1	53 70 70	22	42	3.3	24.4	18	15.8	18	114	57	M3, deep 7	G1/8“	0.28
K2	52 70 90	24.6	49.6	4.3	32.3	22.2	19	19	94.1	44.6	M4, deep 7	G1/8“	0.31
K2	52 70 70	24.6	49.6	4.3	32.3	22.2	19	19	112.1	49.6	M4, deep 7	G1/8“	0.36
K2	53 70 70	24.6	49.6	4.3	32.3	22.2	19	19	125.1	62.6	M4, deep 7	G1/8“	0.42
K3	52 70 90	44	66	5,3	44	32	35	16	169	80	ø5,3	G1/8“	1,28
K3	52 70 70	44	66	5,3	44	32	35	16	156	67	ø5,3	G1/8“	1,18
K3	53 70 70	44	66	5,3	44	32	35	16	178	89	ø5,3	G1/8“	1,36

Notice: use fittings only to max. 19 mm wrench size with series K2.

Series K valves manifold assembly

Series	Order code	Weight [kg]	Application
K1	2500 8181 0600 0003	0.26	End plates (1 pair) for 2 valves
K1	2500 8181 0600 0002	0.08	Middle plate (extension for 1 valve)
K1	2500 8181 0600 0001	0.02	Adaptor plate (1 plate per station)
K1	2500 8181 0600 0004	0.04	Blank station plate
K2	2500 8181 0800 0001	0.29	End plates (1 pair) for 2 valves
K2	2500 8181 0800 0002	0.11	Middle plate (extension for 1 valve)
K2	2500 8181 0800 0003	0.04	Adaptor plate (1 plate per station)
K2	2500 8181 0800 0005	0.07	Blank station plate

Manifolds for K series valves are supplied separately and it is necessary to use one pair of end plates, which are also used as manifolds for 2 valves, and requested number of middle plates (1 plate for 1 valve) to create the complete manifold assembly. It is possible to add other positions to the assembly at any time, just remove the end plate and add additional middle plates. If it is necessary to create a reserve during assembly, it is recommended to use a blank station plate, which can be easily replaced by valve. Max. number of valves in one maifold is 10. Any valve series K may be used for manifold assembly (it doesn't matter if valve is single or double solenoid actuated or air actuated). But it is necessary to use adaptor, which must be mounted between valve and manifold. Valves mounted on manifold could be unmounted separately by unscrew of 2 bolts, which are accessible from top side (side with ports 2 and 4 of valves).

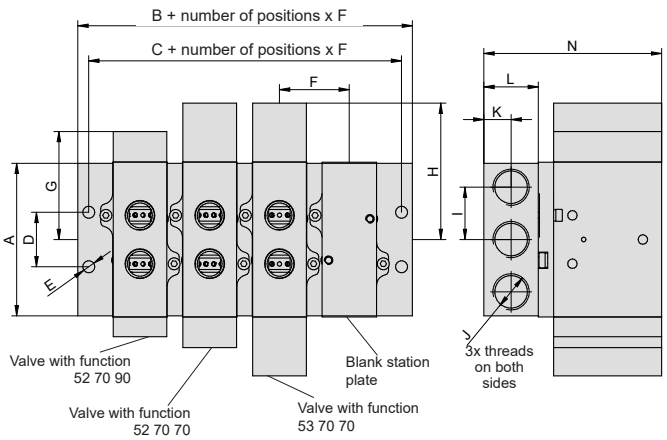

Series	A	B	C	D	E	F	G	H	I	J	K	L	N
K1	59	26.5	16.5	21	5.5	30.5	44	57	21	G1/	12.5	25	72.5
K2	69	25.5	15.5	25	5.5	32	49.5	62.5	24	G3/8“	12.5	25	82

For information about manifold assembly see page 5-5.

All functions like 3/2 normally close and open, 5/2 monostable and bistable and 5/3 with centre closed position are available.

This valve series contains rubber gaskets.

Series	MVAA 220	MVAA 460
Ports	G1/4“ (G1/8“ for exhaust ports 3, 5 and for pilot)	G1/2“ (G1/8“ for pilot)
Flow capacity [Nl/min]	1000	2780
Working pressure [MPa]	0 to 0,8	
Pilot pressure [MPa]	0,2 to 0,8 (min. 0,34 x work pressure + 0,1)	
Weight [kg]	function 3A1: 0,122; 3A2: 0,134; function 4A1: 0,106; 4A2: 0,134; 4A2C:0,179	function 3A1: 0,300; 3A2: 0,326 function 4A1: 0,275; 4A2: 0.338; 4A2C: 0,500
Temperature range [°C]	ambient temperature -5 to +60	

Order codes

PMVAA 220 4A1

Size	
220	series MVAA 220, thread G1/4“
460	series MVAA 460, thread G1/2“

Function		
3A1C	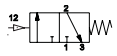	3/2 normally closed
3A1O	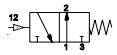	3/2 normally open
3A2	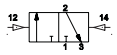	3/2 bistable
4A1	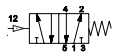	5/2 monostable
4A2	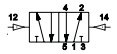	5/2 bistable
4A2C	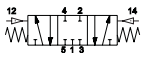	5/3 centre closed position

The valves of MVAA series can be mounted on manifold. Then it is possible to use one air supply (which can be through) and common exhausts. Manifold assembly can save space and reduce installation and maintenance costs. The manifolds are the same as for valves of MVSC series. Order codes and dimensions can be found on pages 5-8 and 5-26.

Flow

Series MVAA 220

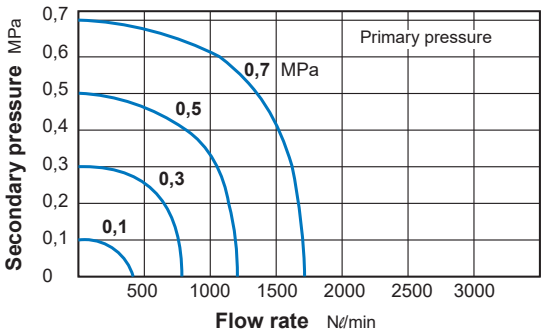

Series MVAA 460

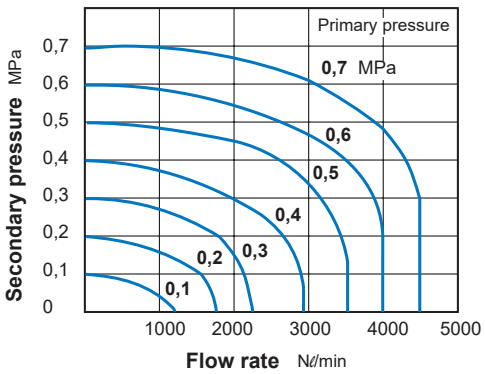

Dimensions

Function 3A1C, 3A1O:

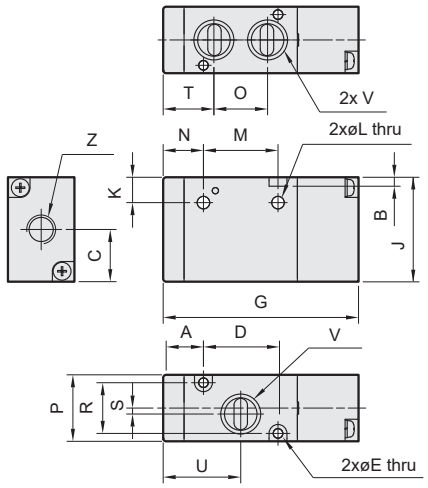

Function 3A2:

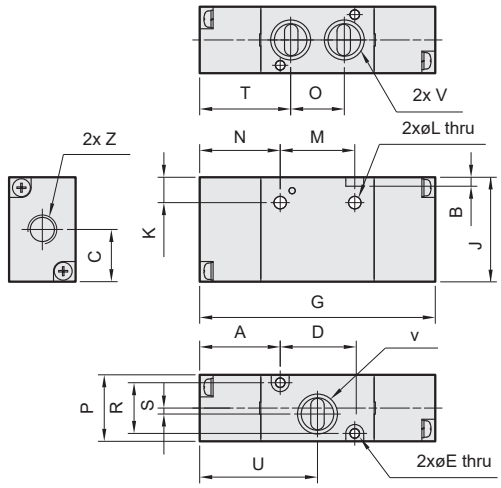

Size	Function	A	B	C	D	E	G	J	K	L	M	N	O	P	R	S	T	U	V	Z
220	3A1	12,5	3	17,5	25,5	3,2	65,5	35	8,5	4,2	25	13,5	18	22,3	17	2	17	26	G1/4“	G1/8“
	3A2	27	3	17,5	25,5	3,2	79	35	8,5	4,2	25	27	18	22,3	17	2	30,5	39,5	G1/4“	G1/8“
460	3A1	15	4	17	48	4,2	94	46,4	37,4	4,5	29	12,5	29	30	23	2,3	27	40,5	G1/2“	G1/8“
	3A2	31	4	17	48	4,2	110	46,4	37,4	4,5	29	28,5	29	30	23	2,3	43	56,5	G1/2“	G1/8“

Function 4A1:

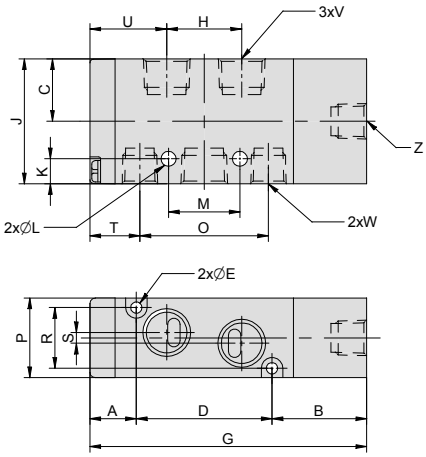

Function 4A2C:

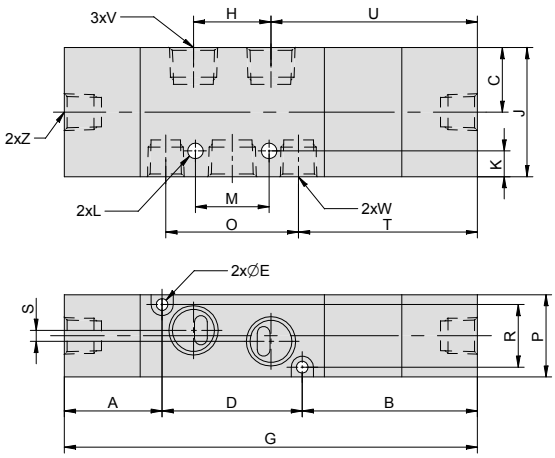

Function 4A2:

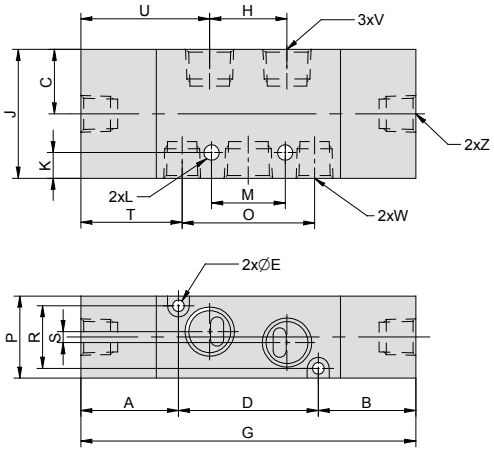

Size	Function	A	B	C	D	E	G	H	J	K	L	M
220	4A1	13	26,5	17,5	38	3,2	77,5	21	35	7	4,2	20
	4A2	26,5	26,5	17,5	38	3,2	91	21	35	7	4,2	20
	4A2C	26,5	47,5	17,5	38	3,2	112	21	35	7	4,2	20
460	4A1	15	31	29,4	72	4,2	118	28	46,4	9	4,5	29
	4A2	31	31	29,4	72	4,2	134	28	46,4	9	4,5	29
	4A2C	50,7	31	29,4	72	4,2	153,5	28	46,4	9	4,5	29

Size	Function	O	P	R	S	T	U	V	W	Z
220	4A1	36	22,3	17	3	14	21,5	G1/4“	G1/8“	G1/8“
	4A2	36	22,3	17	3	27,5	35	G1/4“	G1/8“	G1/8“
	4A2C	36	22,3	17	3	28,5	56	G1/4“	G1/8“	G1/8“
460	4A1	58	30	23	4,5	22	37	G1/2“	G1/2“	G1/8“
	4A2	58	30	23	4,5	38	53	G1/2“	G1/2“	G1/8“
	4A2C	58	30	23	4,5	57,5	72,5	G1/2“	G1/2“	G1/8“

HIGH FLOW
PNEUMATICALLY ACTUATED VALVES

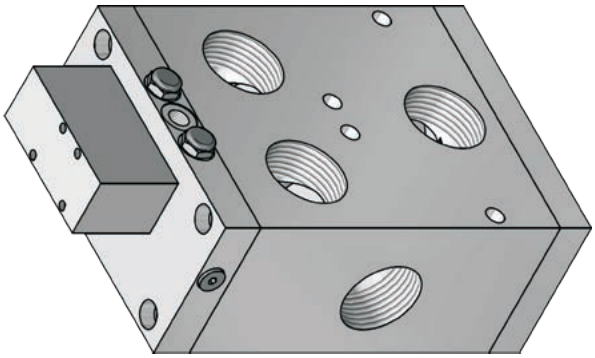

High flow valve series with flow capacity up to 28 000 Nl/min is suitable for fast air supply of big appliances, or higher quantity of appliances which are supplied from common distribution. Valves are pilot operated, using smaller, standard pneumatic actuated valves ISO 5599/1. These pilot valves are designed for external supply of compressed air, however the common supply is possible, but in this case, please contact our technical dept.

This valve series contains rubber gaskets.

Series	G1“	G1 ½“
Ports	G1“	G1 ½“
Connection of external pressure supply port	G1/4“	
Connection of pilot (12,14) for pneumatic actuating	G1/8“	
Flow capacity [Nl/min]	16 000	28 000
Working pressure [MPa]	0 to 1.0 MPa when external pilot supply is used	
Pilot pressure range [MPa]	0.2 to 0.7	
Temperature range [°C]	medium temperature max. 50, ambient temperature -20 to +50	

6

Order codes

25 52 70 90 20 00 000 1

Function		
52 70 90	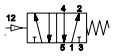	5/2 monostable
52 70 70	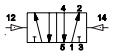	5/2 bistable

Size	
14	G1“
20	G1 ½“

Voltage	
00	w/o coils (pneumatic actuating)

Pilot supply	
2	external (from port X), standard
1*	internal (from port 1)

*) Please consult with our technical dept.

Dimensions

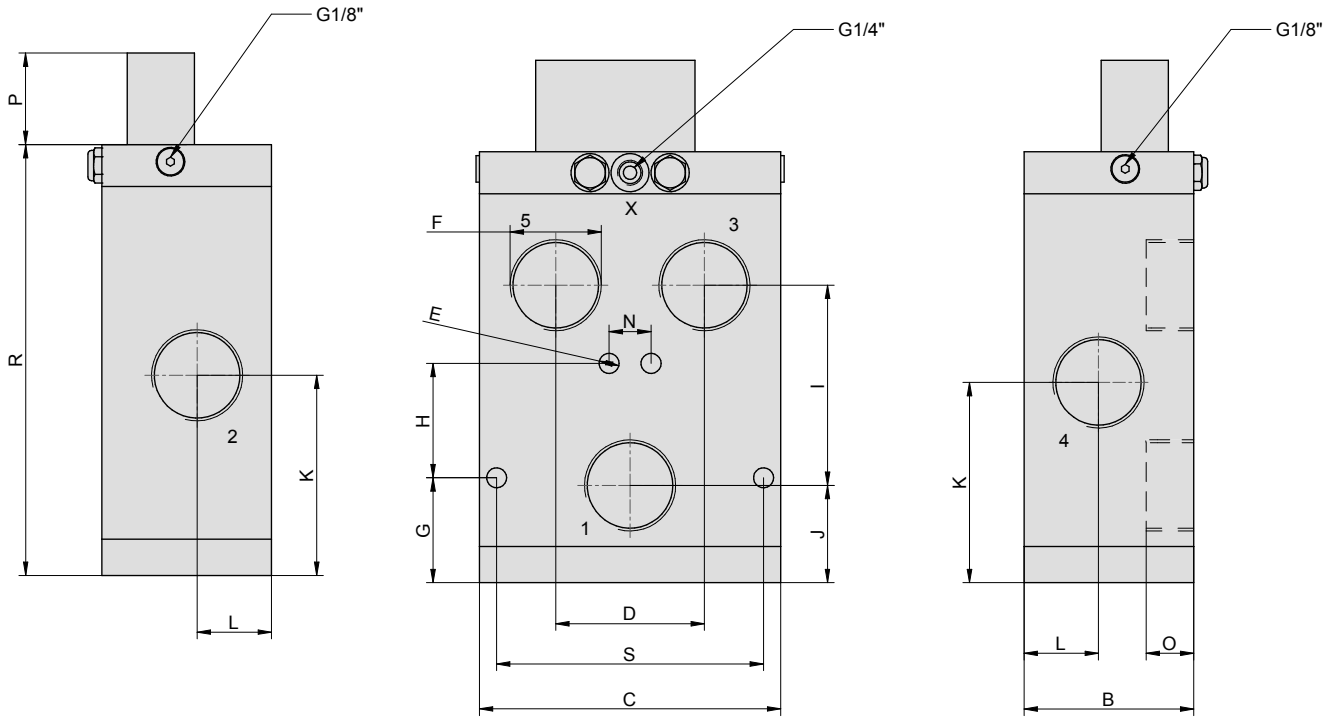

Series	B	C	D	E	F	G	H	I	J	K	L	N	O	P	R	S	Weight [kg]
52 70 x0 14	89	158	78	10.5	G1"	55	60	105	51	105	39	22	25	48	226	140	7.5
52 70 x0 20	89	158	78	10.5	G1 1/2"	55	60	105	51	105	39	22	25	48	226	140	7.5

Notes for connecting of valve

Valves are designed for independent, external air pilot supply (port X). It is not recommended, to merge air supply for main valve and for pilot valve, because a big flow through main valve may cause serious dropping of pressure for pilot valve and malfunction may occur.

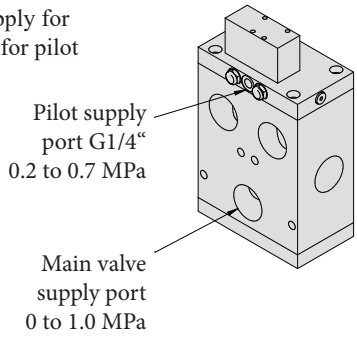

PNEUMATICALLY ACTUATED FLIP-FLOP VALVE

STRÁNSKÝ A PETRŽÍK

The pneumatically actuated valve automatically switches positions after applying a short signal to the control port marked X. After applying pressure to the control port, the position of the valve switches and if there is a pneumatic cylinder connected to the output, for example, it will extend. The signal can be short, or it can last for a long time. The moment of signal introduction is important. As soon as the pressure of the control signal is exhausted - the signal is interrupted, the valve is ready for switching. After pressure is applied again to the control port, the valve will switch and the cylinder will begin to retract. In this way, the valve can be reversed using a single control signal. The valve can also be switched manually in the event of a control signal failure. The control signal is independent of the working supply and can have a different pressure.

This valve series contains rubber gaskets.

Ports	G1/4“
Flow capacity [Nl/min]	1100
Working pressure [MPa]	0,3 to 1,0
Pilot pressure range [MPa]	0,2 to 1,0
Temperature range [°C]	-20 to +60
Working medium	modified compressed air
Weight [kg]	0,59

Order code

Port	G1/4“
Valve 5/2 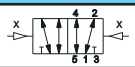	2552 7070 0600 0007

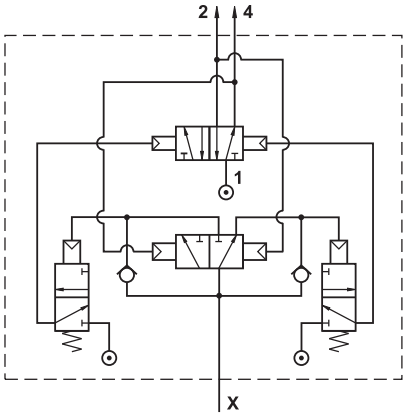

6

Dimensions

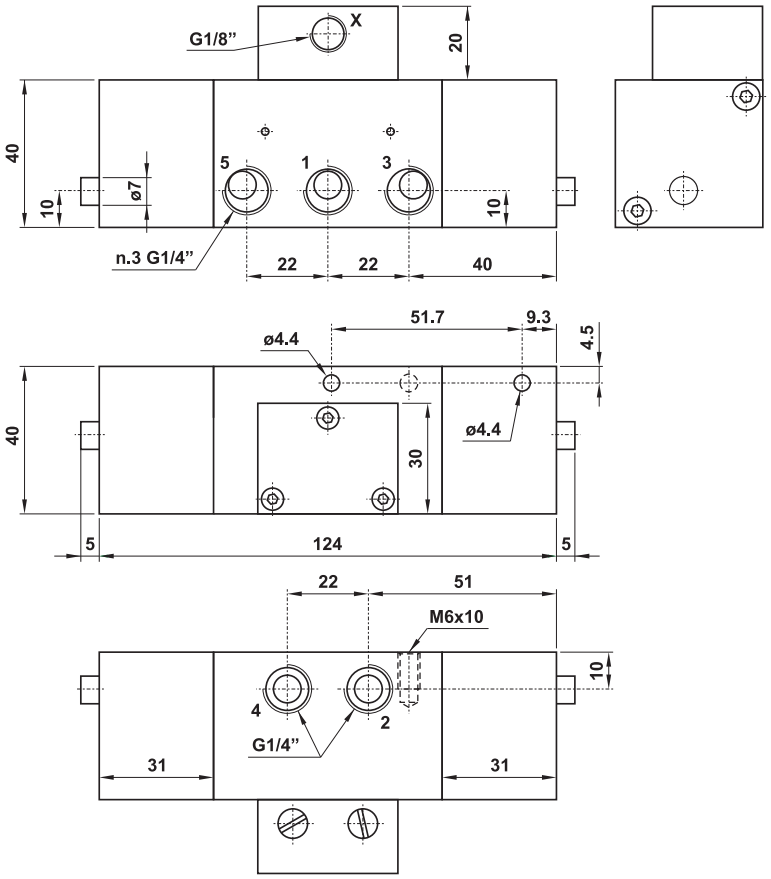

Technical data

Flow rate

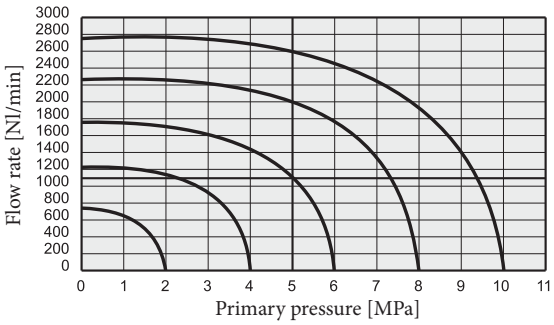

Materials

body - aluminium alloy
spring - stainless steel
seals - NBR
spool - nickel plated aluminium alloy
internal parts - brass

FLOW CONTROL VALVES - CONTENTS

Flow control valves 7-2
M5, G1/8“, G1/4“, G3/8“, G1/2“, G3/4“, G1“, for tube diameter 4, 6, 8, 10 and 12

Non-return valves 7-5
M5, G1/8“, G1/4“, G3/8“, G1/2“, G3/4“, G1“

Unidirectional pressure regulators with push-in fitting 7-6
G1/8“, G1/4“

Quick exhaust valves 7-6
M5, G1/8“, G1/4“, G3/8“, G1/2“, G3/4“, G1“

Logical gates AND and OR 7-7
G1/8“

Manually operated slide valves 7-7
G1/8“, G1/4“, G3/8“, G1/2“

Ball valves 7-8
G1/4“, G3/8“, G1/2“, G3/4“, G1“, G1 1/4“, G1 1/2“, G2“, for tube diameter 4, 6, 8, 10 and 12

Sensor fitting 7-9
G1/8“, G1/4“, G3/8“, for tube diameter 4

Pressure indicator 7-9
G1/4“

Valve for signal start delay 7-10
G1/8“, G1/4“, G3/8“, G1/2“

Valve for limiting the signal length 7-10
G1/8“, G1/4“, G3/8“, G1/2“

Unidirectional flow control valve - push-in, for cylinder use, for screw driver setting

Order codes	T - For tube	F - Thread	D	H	L1 max.	L2	L3	SW
N135C-004-005	4 / 2	M5	10	12.5	24.5	19	5.5	8
N135C-004-000	4 / 2	G1/8“	10	12.5	30	20.2	7	14
N135C-006-005	6 / 4	M5	12	13	24.5	20.6	5.5	8
N135C-006-000	6 / 4	G1/8“	12	13.5	30	20.6	7	14
N135C-006-001	6 / 4	G1/4“	12	13.5	36.5	22.6	9	17
N135C-008-000	8 / 6	G1/8“	15	16	30	23.8	7	14
N135C-008-001	8 / 6	G1/4“	15	16	35.6	25.8	9	17
N135C-008-002	8 / 6	G3/8“	15	16	41	30	9	19
N135C-010-001	10 / 8	G1/4“	18	17	36.5	27.1	9	17
N135C-010-002	10 / 8	G3/8“	18	17	41	31	9	19
N135C-012-001	12 / 10	G1/4“	20	19	36.5	31.5	9	17

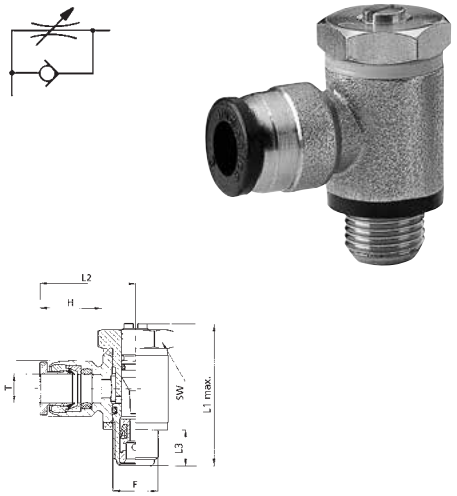

Unidirectional flow control valve - push-in, for cylinder use, with control knob setting

Order codes	T - For tube	F - Thread	D	H	L max.	L2	L3	SW	SW1
N136C-004-005	4 / 2	M5	10	12.5	35	19	5.5	8	6
N136C-004-000	4 / 2	G1/8“	10	12.5	45	20.2	7	14	9
N136C-006-005	6 / 4	M5	12	13	35	20.6	5.5	8	6
N136C-006-000	6 / 4	G1/8“	12	13.5	45	20.6	7	14	9
N136C-006-001	6 / 4	G1/4“	12	13.5	52	22.6	9	17	9
N136C-008-000	8 / 6	G1/8“	15	16	45	23.8	7	14	9
N136C-008-001	8 / 6	G1/4“	15	16	52	25.8	9	17	9
N136C-008-002	8 / 6	G3/8“	15	16	58	30	9	19	11
N136C-010-001	10 / 8	G1/4“	18	17	52	27.1	9	17	9
N136C-010-002	10 / 8	G3/8“	18	17	58	31	9	19	11
N136C-012-001	12 / 10	G1/4“	20	19	52	31.5	9	17	9

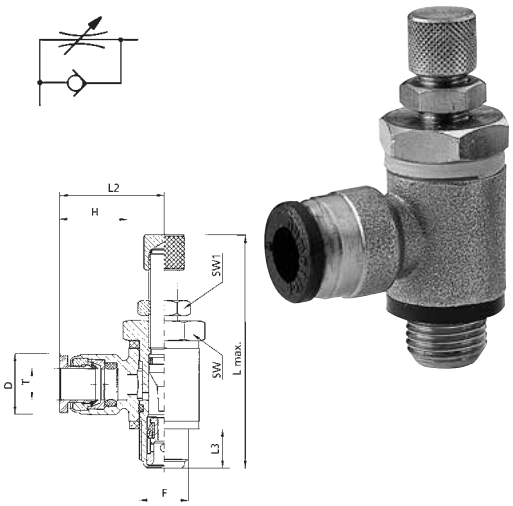

7

Working pressure	0.2 to 1.0 MPa
Temperature range	-20°C to +80°C
Working medium	modified compressed air

Flow capacity

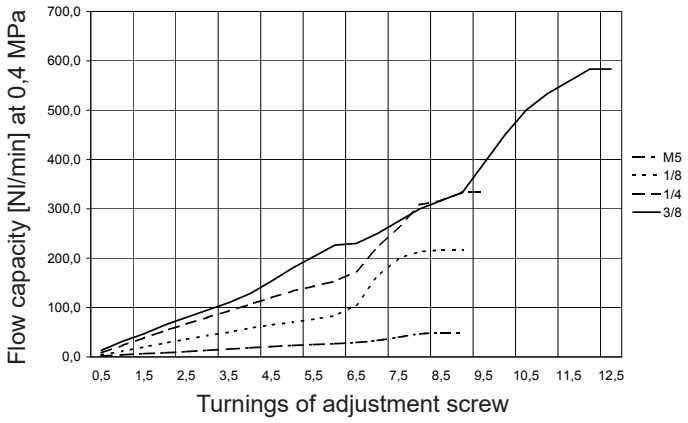

Unidirectional flow control valve - plastic, push-in, for cylinder use, with control knob setting

∅ mm	Thread	Order codes
4	M5	P136C-004-005
4	G1/8“	P136C-004-000
4	G1/4“	P136C-004-001
6	M5	P136C-006-005
6	G1/8“	P136C-006-000
6	G1/4“	P136C-006-001
6	G3/8“	P136C-006-002
8	G1/8“	P136C-008-000
8	G1/4“	P136C-008-001
8	G3/8“	P136C-008-002
8	G1/2“	P136C-008-003
10	G1/4“	P136C-010-001

∅ mm	Thread	Order codes
10	G3/8“	P136C-010-002
10	G1/2“	P136C-010-003
12	G1/4“	P136C-012-001
12	G3/8“	P136C-012-002
12	G1/2“	P136C-012-003

Unidirectional flow control valve - plastic, push-in, with control knob setting

For tube ∅ mm	Order codes
4	P139C-004-000
6	P139C-006-000
8	P139C-008-000
10	P139C-010-000
12	P139C-012-000

Unidirectional flow control valve - dural, with internal threads, with control knob setting

Thread	Order codes	Max. flow* 1→2	Max. flow* 2→1
M5	NDRV05B	60	130
G1/8“	NDRV10	60	450
G1/4“	NDRV25	300	600
G3/8“	NDRV37	600	1100
G1/2“	NDRV50	600	1400

*) Max. flow [Nl] at primary pressure 0.6 MPa and pressure difference 0.1 MPa

Bidirectional flow control valve - dural, with internal threads, with control knob setting

Thread	Order codes	Max. flow*
M5	NDV05	60
G1/8“	NDV10	60
G1/4“	NDV25	300
G3/8“	NDV37	600
G1/2“	NDV50	600

*) Max. flow [Nl] at primary pressure 0.6 MPa and pressure difference 0.1 MPa

Unidirectional flow control valve - internal/external threads, for cylinder use, for screw driver setting

Order codes	Thread	Flow
N0FCRG	M5	45
N1FCRG	G1/8“	310
N2FCRG	G1/4“	450
N3FCRG	G3/8“	1040
N4FCRG	G1/2“	2200

*) Max. flow [Nl] at prim. press. 0.6 MPa

Bidirectional flow control valve - internal/external threads, for screw driver setting

Order codes	Thread	Flow
N0FCG	M5	45
N1FCG	G1/8“	310
N2FCG	G1/4“	450
N3FCG	G3/8“	1040
N4FCG	G1/2“	2200

*) Max. flow [Nl] at prim. press. 0.6 MPa

Working pressure	0.2 to 1.0 MPa
Temperature range	-20°C to +60°C
Working medium	modified compressed air

NDRV05B, NDV05

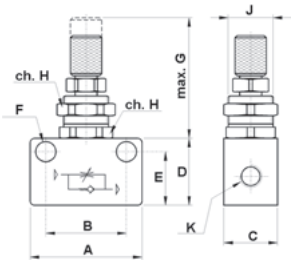

NDRV10, NDV10 and bigger

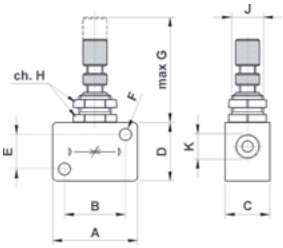

A	B	C	D	E	F	G	H	J	K
25	18	12	15	12	4.5	27	11	M10x0.75	M5
32	23	16.8	22	13	4.5	35	15	M12x0.75	G1/8“
40	30	22	32	22	4.5	35	15	M12x0.75	G1/4“
56	43	27	42	27	6.5	43	24	M18x1	G3/8“
56	43	27	42	27	6.5	43	24	M18x1	G1/2“

High-flow unidirectional flow control valve

Thread	Order codes	Max. flow* 1→2	Max. flow* 2→1	Weight [g]	Working pressure	Temperature range	Working medium
G1/2“	PMSC500-15A	6320	5780	406	0.0 to 1.0 MPa	-5°C to +60°C	modified compressed air
G3/4“	PMSC500-20A	8390	6700	400			
G3/4“	PMSC600-20A	8940	8230	767			
G1“	PMSC600-25A	12 540	14 060	721			

*) Max. flow [Nl] at supply pressure 0.5 MPa.

Push-in flow control valves - components

Screw for flow regulation,
unidirectional, for cylinder use, for screw driver setting

Thread	Order codes
M5	NCVC-005
G1/8“	NCVC-000
G1/4“	NCVC-001
G3/8“	NCVC-002

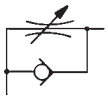

Screw for flow regulation,
unidirectional, for cylinder use, with control knob setting

Thread	Order codes
M5	NCMC-005
G1/8“	NCMC-000
G1/4“	NCMC-001
G3/8“	NCMC-002

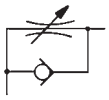

Screw for flow regulation,
unidirectional, for valve use, for screw driver setting

Thread	Order codes
M5	NCVV-005
G1/8“	NCVV-000
G1/4“	NCVV-001
G3/8“	NCVV-002

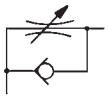

Screw for flow regulation,
unidirectional, for valve use, with control knob setting

Thread	Order codes
M5	NCMV-005
G1/8“	NCMV-000
G1/4“	NCMV-001
G3/8“	NCMV-002

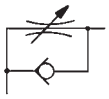

Screw for flow regulation,
bidirectional, for screw driver setting

Thread	Order codes
M5	NCVB-005
G1/8“	NCVB-000
G1/4“	NCVB-001
G3/8“	NCVB-002

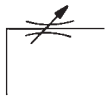

Screw for flow regulation,
bidirectional, with control knob setting

Thread	Order codes
M5	NCMB-005
G1/8“	NCMB-000
G1/4“	NCMB-001
G3/8“	NCMB-002

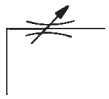

7

1 port banjo for screw for flow regulation

∅ mm	Thread	Order codes
4	M5	N122/1-004-005
4	G1/8“	N122-004-000
6	M5	N122/1-006-005
6	G1/8“	N122-006-000
6	G1/4“	N122-006-001
8	G1/8“	N122-008-000
8	G1/4“	N122-008-001
8	G3/8“	N122-008-002
10	G1/4“	N122-010-001
10	G3/8“	N122-010-002
12	G1/4“	N122-012-001

Working pressure	0.2 to 1.0 MPa
Temperature range	-20°C to +80°C
Working medium	modified compressed air

Assembly of flow control valve:

+

=

Non-return valve, controlled, elbow, push-in or internal threaded

Order codes	D - For tube	G1 - Thread	B	G2 - Pilot port thread	H	L1	L2	OK
NCPPG-004-000	4 / 2	G1/8“	14	M5	6	15.5	42	13
NCPPG-006-000	6 / 4	G1/8“	14	M5	6	15.5	42	13
NCPPG-006-001	6 / 4	G1/4“	18	M5	8	18.5	47	17
NCPPG-008-000	8 / 6	G1/8“	14	M5	6	15.5	42	13
NCPPG-008-001	8 / 6	G1/4“	18	M5	8	18.5	47	17
NCPPG-008-002	8 / 6	G3/8“	21	G1/8“	9	21	53.5	20
NCPPG-010-001	10 / 8	G1/4“	18	M5	8	18.5	47	17
NCPPG-010-002	10 / 8	G3/8“	21	G1/8“	9	21	53.5	20
NCPPG-012-001	12 / 10	G1/4“	18	M5	8	18.5	47	17
NCPPG-012-002	12 / 10	G3/8“	21	G1/8“	9	21	53.5	20

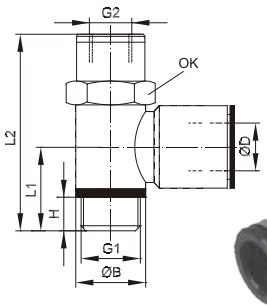

Order codes	G1 - Thread	B	G2 - Pilot port thread	H	L1	L2	OK
NCPGG-000-000	G1/8“	15	M5	6	15.5	42	13
NCPGG-001-001	G1/4“	18	M5	8	18.5	47	17
NCPGG-002-002	G3/8“	22	G1/8“	9	21	53.5	20
NCPGG-003-003	G1/2“	27	G1/8“	10	24.5	60	25

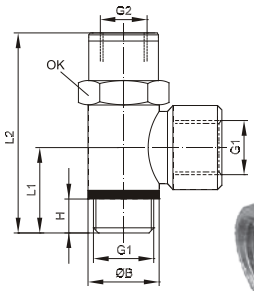

Working pressure	0.2 to 1.0 MPa
Temperature range	-5°C to +70°C
Working medium	modified compressed air

Flow capacity and min. opening pressure

Thread	Flow* [Nl]	Min. opening pressure at primary pressure [MPa]				
		0.2	0.4	0.6	0.8	1.0
G1/8“	400	0.15	0.2	0.3	0.35	0.4
G1/4“	850	0.15	0.2	0.3	0.35	0.4
G3/8“	1250	0.15	0.2	0.3	0.35	0.4
G1/2“	1800	0.15	0.2	0.3	0.35	0.4

*) Max. flow [Nl] at primary pressure 0.6 MPa

7

Non-return valve, uncontrolled

Order codes	D - For tube	B	L
2750 0003 3100 0000	4 / 2	9	44.5
2750 0003 3200 0000	6 / 4	11	50
2750 0003 3300 0000	8 / 6	13	53.5

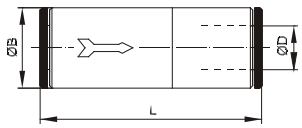

Order codes	Internal thread	L	B	C	Ch	Flow capacity [Nl/min]
NRV05	M5	25	—	—	8	100
NRV10	G1/8“	34	—	—	13	500
NRV25	G1/4“	39	—	—	16	900
NRV37	G3/8“	47	20	27	20	4290
NRV50	G1/2“	44.5	28	—	25	4290
NRV75	G3/4“	47.5	34.5	—	31	5720
NRV100	G1“	56	42	—	38	10340

NRV05 to NRV25

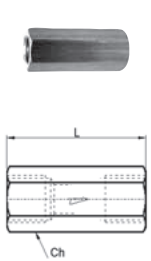

NRV37

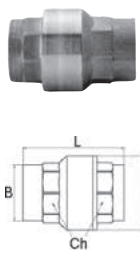

NRV50 to NRV100

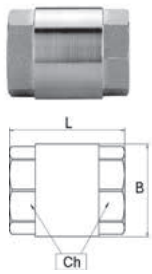

Working pressure	0.2 to 1.0 MPa (NRV05 to NRV25), 0 to 4.0 MPa (NRV37 to NRV75), 0 to 2.5 MPa (NRV100)
Temperature range	-10°C to +60°C (NRV05 to NRV25), -20°C to +100°C (NRV37 to NRV100)
Working medium	modified compressed air

Unidirectional pressure regulators with push-in fitting

Order codes	E - For tube	A - Thread	B (OK)	C max.
NPRPG-004-000	4 / 2	G1/8“	17	73
NPRPG-006-000	6 / 4	G1/8“	17	73
NPRPG-006-001	6 / 4	G1/4“	17	81
NPRPG-008-000	8 / 6	G1/8“	17	73
NPRPG-008-001	8 / 6	G1/4“	17	81
NPRPG-010-001	10 / 8	G1/4“	17	81

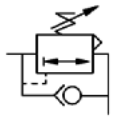

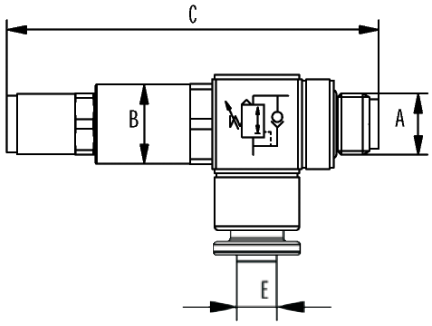

Primary pressure	0.1 to 1.6 MPa
Secondary pressure	0.1 to 0.8 MPa
Temperature range	-10°C to +70°C
Working medium	modified compressed air

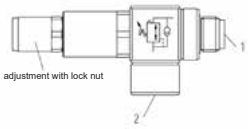

Flow capacity 1→2 at p_1=0.7 MPa

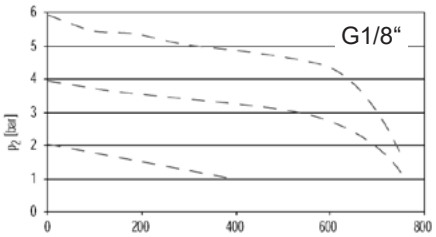

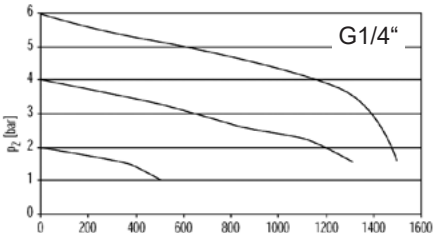

7

Quick exhaust valve

Order codes	D1 - Thread	L1	L2	L3	S1	Spare parts kit order code
NSEV05C	M5	5	16	25	10	NSEV05C-RK
NSEV10C	G1/8“	7.5	27	42	15	NSEV10C-RK
NSEV25C	G1/4“	11	35	54	19	NSEV25C-RK
NSEV37C	G3/8“	11	35	54	19	NSEV37C-RK
NSEV50C	G1/2“	14	45	72	26	NSEV50C-RK
NSEV75C	G3/4“	16.3	53	87	32	NSEV75C-RK
NSEV100C	G1“	18	70	108	46	NSEV100C-RK

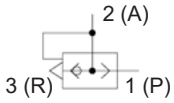

Spare parts kit:

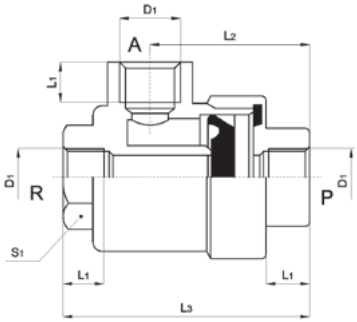

Working pressure	0.1 to 1.0 MPa
Temperature range	-20°C to +70°C
Working medium	modified compressed air

Flow capacity at 0,6 MPa

Thread	M5	G1/8"	G1/4"	G3/8"	G1/2"	G3/4"	G1"
Flow P→A [Nl/min]	290	900	1300	1600	4200	5800	7700
Flow A→R [Nl/min]	340	1200	2500	2600	7400	12600	19000

Logical gate AND (production)

Order codes	C-Thread	A	B	D	E	F	G	H	I	J	K	Weight [kg]
2760 0100 0400 0000	G1/8“	24	4.5	20	8	24	40	35	7	5	45	0.12

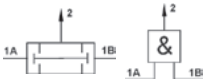

Working pressure	0.2 to 1.0 MPa
Temperature range	-20°C to +80°C
Working medium	modified compressed air

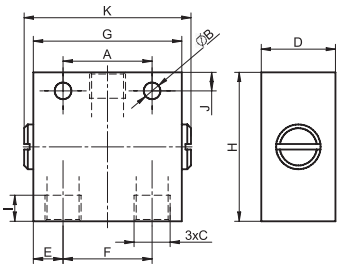

Logical gate OR (sum)

Order codes	C-Thread	A	B	D	F	G	H	I	J	K	Weight [kg]
2760 0200 0400 0000	G1/8“	24	4.5	20	20	40	40	7	5	45	0.12

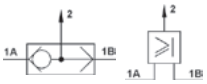

Working pressure	0.2 to 1.0 MPa
Temperature range	-20°C to +80°C
Working medium	modified compressed air

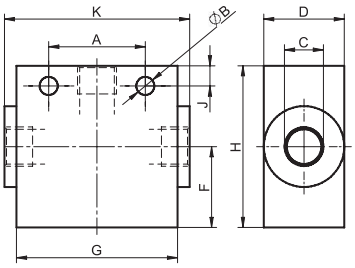

Manually operated slide valve 3/2 with external threads

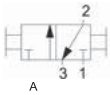

Order codes	G - Thread	A	B	C	D	Weight [kg]
2740 3200 1006 0600	G1/4“	71	10	24	10	0.09
2740 3200 1008 0800	G3/8“	87	12	34	10	0.20
2740 3200 1010 1000	G1/2“	89	14	45	14	0.26

Working pressure, temperature and medium see below

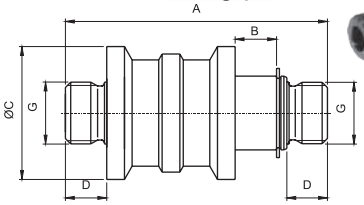

7

Manually operated slide valve 3/2 with external thread and tube socket

Order codes	A - Thread	B	C	D	F	G	H	I	J	OK	Weight [kg]
2740 3200 2006 3300	G1/4“	10	77	21	6	27	10	8	24	17	0.08

Working pressure, temperature and medium see below

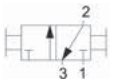

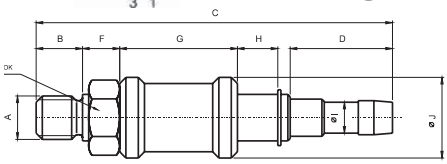

Manually operated slide valve 3/2 with internal threads

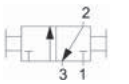

Order codes	G - Thread	Js	D2	M	L	OK	Flow capacity [Nl/min]
N530-000	G1/8“	4	25	12	48	14	700
N530-001	G1/4“	7	35	12	58	19	1100
N530-002	G3/8“	10	38	12	68	22	1500
N530-003	G1/2“	15	48	15	88	27	2200

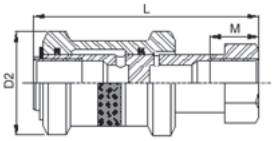

Working pressure	0 to 1.0 MPa (2740...), 0 to 1.6 MPa (N530)
Temperature range	-10°C to +80°C
Working medium	modified compressed air

Standard ball valve 2/2

Order codes	Thread	A	B	C	D	E	F	G	CH
NKHI25	G1/4“	51	25.5	40	80	10	25.5	25.5	18
NKHI37	G3/8“	60	25.5	40	80	10	30	30	21
NKHI50	G1/2“	75	32.5	50	89	15	37.5	37.5	25
NKHI75	G3/4“	80	42	59	113	20	40	40	31
NKHI100	G1“	90	49.5	63	113	25	45	45	40
NKHI125	G1 1/4“	110	59.5	77	138	32	55	55	49
NKHI150	G1 1/2“	120	72	91	158	40	60	60	54
NKHI200	G2“	140	86	97	158	50	70	70	68.5

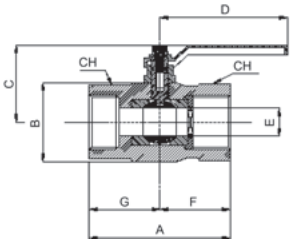

Medium ball valve 2/2

Order codes	Thread	A	F	H	L1	SW	T
NKMI10	G1/8“	6	9	38	39	21	22
NKMI25	G1/4“	8	9	38	39	21	22
NKMI37	G3/8“	8	9	38	42	21	22
NKMI50	G1/2“	10	10.5	42	47	25	22
NKMI75	G3/4“	12	10.5	46	54	30	22

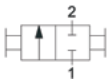

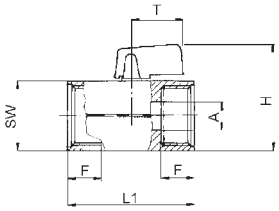

Small ball valve 2/2

Order codes	Thread A,B	ES	F	M	L	G	H
NKMI10-01	G1/8“	14-15	7.4	7.4	36	19	21
NKMI25-01	G1/4“	14-15	11	11	43	19	21
NKMI37-01	G3/8“	18-19	11.4	11.4	47	19	22
NKMI50-01	G1/2“	22-23	15	15	59	26	30.5
NKMI75-01	G3/4“	28-30	16.3	16.3	67	26	33

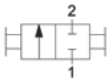

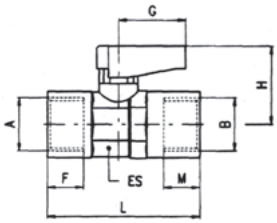

Small ball valve 2/2 with push-in fittings

Order codes	Outside ø of tube	Es	L	G	H
NKMI-004	4 / 2	15	44	19	21
NKMI-006	6 / 4	15	48	19	21
NKMI-008	8 / 6	15	48	19	21
NKMI-010	10	19	58,5	19	22
NKMI-012	12	23	66	26	30,5

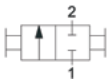

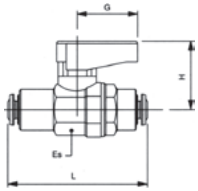

Working pressure	0 to 1.5 MPa (NKMI), 0 to 2.5 MPa (NKHI)
Temperature range	-10°C to +90°C (up to +60°C with push-in fittings)
Working medium	modified compressed air, oil, water

Sensor fitting

Order codes	D1 - Thread	D2	D3	L1	L2	L3	L4	CH1	CH2	Weight [kg]
2899 0029 9040 0005	G1/8“	4	G1/8“	5	11	29.5	38	13	16	0.069
2899 0029 9060 0001	G1/4“	4	G1/4“	6.5	13	33	40	16	16	0.079
2899 0029 9080 0001	G3/8“	4	G3/8“	7	13	33	42	20	20	0.098

Working pressure [MPa]	0.3	0.4	0.5	0.6	0.7	0.8	0.9	1.0
Switching pressure [MPa]	0.03	0.05	0.065	0.09	0.10	0.12	0.14	0.16

Threshold sensor can detect a pressure drop and signal it with a command signal (s). This component turns out to be especially useful when assembled directly on the cylinder. When the piston completes its stroke (no more counter pressure available in the cylinder), a command signal is given out to a direction valve to have the piston change the stroke. Sole condition required for perfect component performance is that the piston has to complete its stroke. No intermediate positions are allowed.
Major advantage of this component is to command the piston stroke changes without electrical connections.

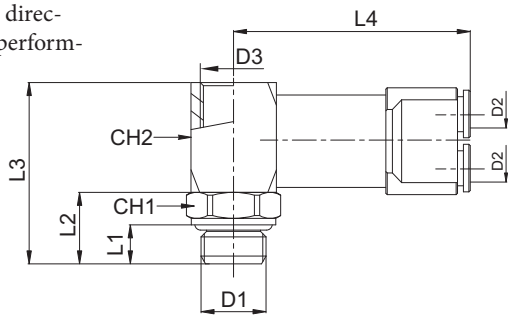

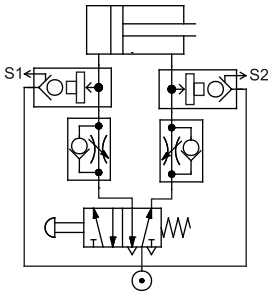

Cylinder is retracted, signal S1 is active, S2 is inactive.

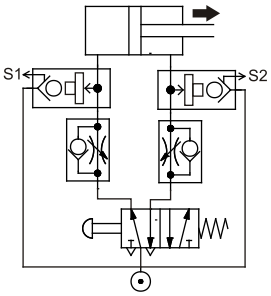

Cylinder is thrusting, both signals S1 and S2 are inactive.

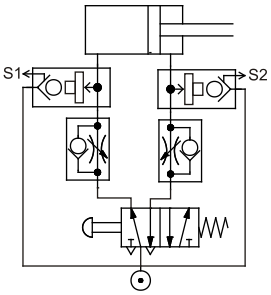

Cylinder is thrust, signal S1 is inactive, S2 is active.

Working pressure	0.3 to 1.0 MPa
Temperature range	0°C to +70°C
Working medium	modified compressed air

7

Pressure indicator

Order codes	Colour	Thread	Weight [kg]
2899 0020 3060 0003	red	G1/4“	0.053
2899 0020 3060 0004	yellow	G1/4“	0.053
2899 0020 3060 0005	green	G1/4“	0.053
2899 0020 3060 0006	blue	G1/4“	0.053

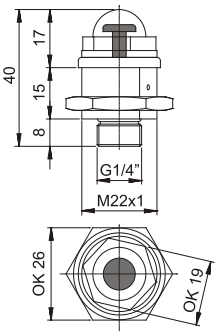

Pressure indicator is used for visual display, if there is a pressure in the circuit. Indicator doesn‘t show the value of a pressure, but only if there is or isn‘t pressure. In case, that there is a pressure, the colour disk is visible in the dome, with visibility of 180°.

Working pressure	0.2 to 1.0 MPa
Temperature range	0°C to +60°C
Working medium	modified compressed air

Valve for signal start delay

Order code	Delay range [s]	Thread	Weight [kg]
2532 7090 0400 0006	0 to 5	G1/8“	0.11

This device, if air is supplied at port 1, lets the air go out from port 2 when the adjustable dwell time (pre-set by screw R) has elapsed. The air flow can then be interrupted by removing the air supply from port 1. The difference from the normally open version (see below) is that the screw R adjusts the dwell time and not the duration of the air impulse.

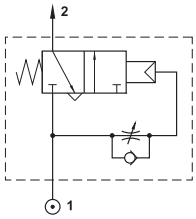

Valve for limiting the signal length

Order code	Signal length range [s]	Thread	Weight [kg]
2532 7090 0400 0005	0 to 5	G1/8“	0.11

It is a device which produces an adjustable impulse of fixed duration by adjusting screw (R). When a signal is applied from a three way valve and maintained at port 1 the impulse generator is activated and will generate an impulse period which was pre-set by screw R. If the signal is interrupted the duration of the impulse is terminated. To repeat the cycle the pilot signal must be exhausted and applied again.

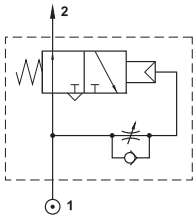

Working pressure	0.2 to 1.0 MPa
Temperature range	0°C to +60°C
Working medium	modified compressed air

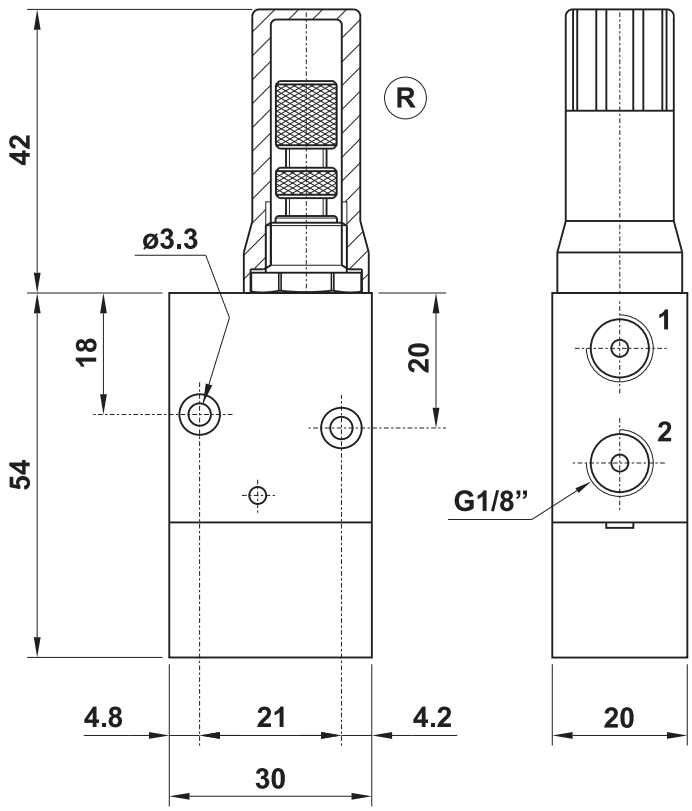

Notice: dimensions are the same for both valves - valve for signal start delay and valve for shorten the signal length.

Complete FRL units and standalone units

FRL units series MACP302 8-2
G1/4", G3/8", G1/2"

FRL units series MACP401 8-3
G1/4", G3/8", G1/2"

FRL units series MACP501 8-4
G3/4", G1"

Precision regulator series MAIR100, MAIR200 and MAIR300 8-5
G1/8", G1/4", G3/8", G1/2"

Filters series MAF302, MAF401 and MAF501 8-6
G1/4", G3/8", G1/2", G3/4", G1"

Regulators series MAR200, MAR302, MAR401 and MAR501 8-8
G1/4", G3/8", G1/2", G3/4", G1"

Particular filters series MAFR302, MAFR401 and MAFR501 8-10
G1/4", G3/8", G1/2", G3/4", G1"

Lubricators series MAL302, MAL401 and MAL501 8-12
G1/4", G3/8", G1/2", G3/4", G1"

Coalescing filters series MAF302, MAF401 and MAF501 8-14
G1/4", G3/8", G1/2", G3/4", G1"

Coalescing filters series MJF 8-17
R1/2" to R2 1/2"

Soft start-up valve series MAVS401 8-19
G1/2"

Electro-pneumatic regulator series MAER200 8-20
G1/4", G3/8"

Electro-pneumatic regulator series MAER300 8-22
G1/4", G3/8", G1/2"

Shutoff valve series MVHR 8-24
G1/4", G3/8", G1/2"

Connection plates, diverter blocks, spare bowls, spare filter elements 8-25
for units of MA series*

Valve with digital condensation removal timer 8-25
G1/8", G1/4"

Gauges 8-26
round R1/8", R1/4", square, for panel mounting G1/8", G1/4", digital gauges G1/8"

8

Accessories

Digital pressure switch, type MP45 8-30
M5, G1/8", with 2 PNP/NPN and analog outputs

Electronic pressure switch, type MP10, push-in or with thread 8-31
dia. 4, 6 mm, G1/8"

Pressure switches series PS31 and 27N 8-31
R1/8"

Pneumatic oil and grease 8-32
pneumatic oil, grease for pneumatic components standard, for high temperatures and with PTFE-Teflon

FRL AIR PREPARATION UNIT
SERIES MACP302

STRÁNSKÝ A PETRŽÍK

The new FRL unit series with robust metal construction with polycarbonate or nylon bowls with plastic guards, or with metal bowls. High flow rate and 5 µm filter element predestine these units for all smaller applications.

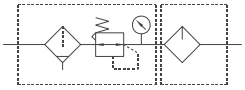

Port thread	G1/4“	G3/8“	G1/2“
Primary pressure [MPa]	0,05 to 1,0 for semiautomatic drain, 0,15 to 1,0 for automatic drain		
Secondary pressure [MPa]	0,05 to 0,85		
Test pressure [MPa]	1,5		
Temperature range [°C]	-5 to +60		
Filter element [µm]	5		
Oil bowl capacity [l]	0,065		
Min. lubricator flow [Nl/min]	50	60	60
Weight [kg]	0,85		
Supply contains	gauge (PPG-20)*, bracket (T-shaped)		

*) Gauge PPG-40 can only be used with a threaded adapter, order code PA-MAR302, see page 8-26

Order codes

PMACP302 – 8A M – BSP

Port size	
8A	G1/4“
10A	G3/8“
15A	G1/2“

Bowl	
	polycarbonate
N	nylon
M	metal

Condensation draining	
–	semiautomatic
D	automatic

Semiautomatic condensation draining automatically drains when the primary pressure drops under 0,05 MPa.

The unit can be placed with the inlet on the right or on the left.

For additional accessories, replacement filter elements and bowls, see page 8-25.

8

Dimensions

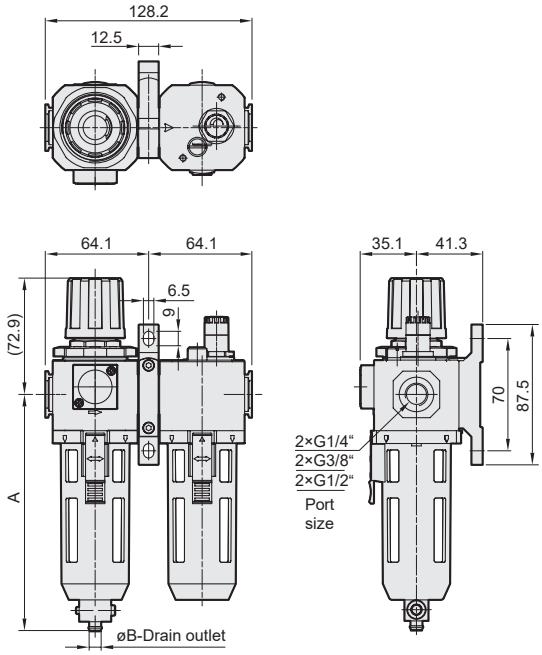

Semiautomatic condensation draining

Bowl	A	B - inner tube ø
polycarbonate nylon	147,1	6
metal	147,2	5

Automatic condensation draining

Bowl	A	B - outer tube ø
polycarbonate nylon	156,6	8
metal	159,1	8

Flow capacity

Flow rates at primary pressure 0,7 MPa

G1/4“

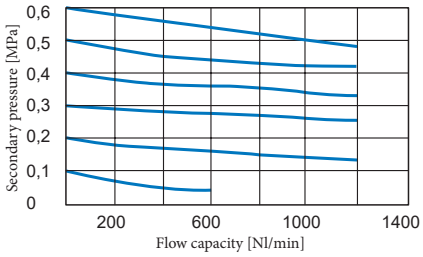

G3/8“
G1/2“

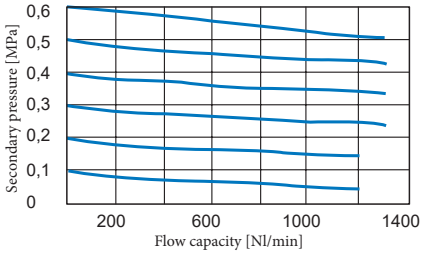

FRL AIR PREPARATION UNIT SERIES MACP401

The new FRL unit series is interest for its robust metal construction inclusive metal bowls with level indicator at first sight. Countersunk gauge isn't predisposed to damage. These accessible units with good flow capacity and 5 µm filter element will find exercise in many applications.

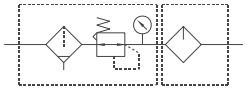

Port thread	G1/4“	G3/8“	G1/2“
Primary pressure [MPa]	0,05 to 1,5 for semiautomatic drain, 0,15 to 1,0 for automatic drain		
Secondary pressure [MPa]	0,1 to 0,85		
Test pressure [MPa]	2,0		
Temperature range [°C]	-5 to +60		
Filter element [µm]	5		
Oil bowl capacity [l]	0,2		
Min. lubricator flow [Nl/min]	30	65	80
Weight [kg]	1,52		
Supply contains	gauge (PPG-20)*, bracket (elbow)		

*) Gauge PPG-40 can only be used with a threaded adapter, order code PA-MAR401, see page 8-26

Order codes

PMACP401 – 8A – 5u – BSP

Port size	
8A	G1/4“
10A	G3/8“
15A	G1/2“

Condensate draining	
–	semiautomatic
D	automatic

Semiautomatic condensation draining automatically drains when the primary pressure drops under 0,05 MPa.

The unit can be placed with the inlet on the right or on the left.

For additional accessories, replacement filter elements and bowls, see page 8-25.

Dimensions

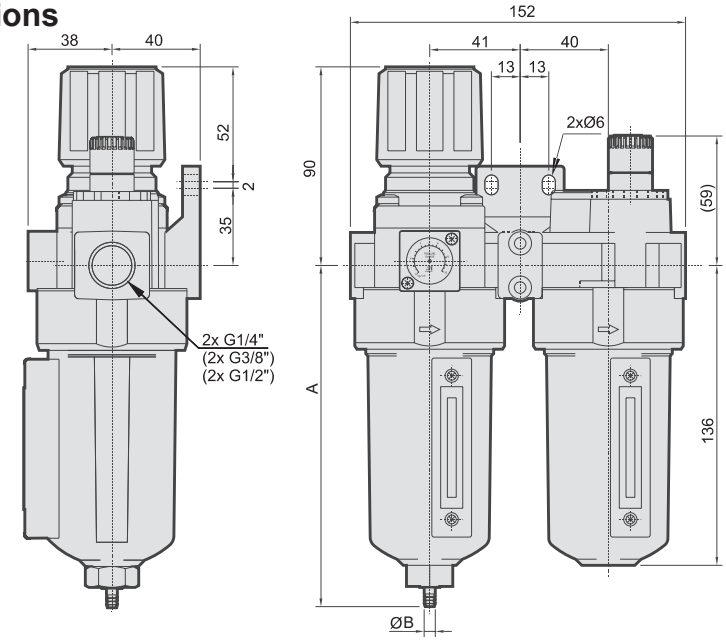

Semiautomatic condensation draining

A	B - inner tube ø
154	5

Automatic condensation draining

A	B - outer tube ø
166	8

Flow capacity

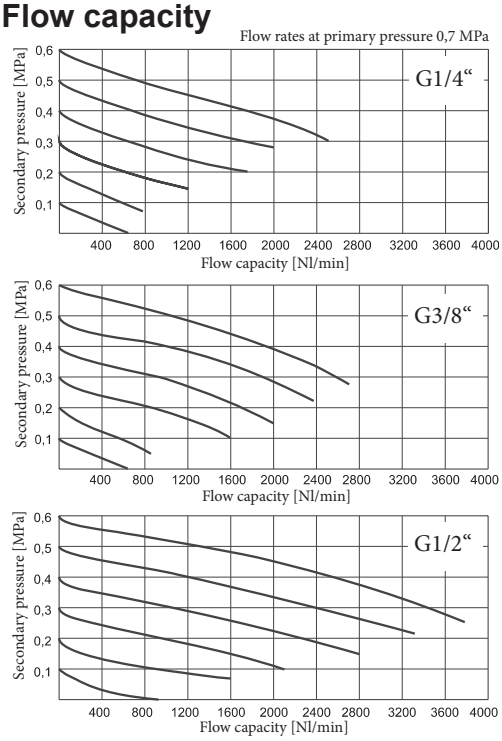

8

FRL AIR PREPARATION UNIT
SERIES MACP501

STRÁNSKÝ A PETRŽÍK

FRL series which supplement series MACP401. Also this series features by robust construction with polycarbonate or nylon bowls with plastic guards, or metal bowls. These reasonable units with 40 µm filter element will find usage in wide range of applications, where the high flow is necessary.

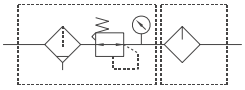

Port thread	G3/4“	G1“
Primary pressure [MPa]	semiautomatic drain: 0,05 to 1,0 (polycarbonate and nylon bowls), 0,05 to 1,5 (metal bowls) automatic drain: 0,15 to 1,0	
Secondary pressure [MPa]	0,1 to 0,85	
Test pressure [MPa]	1,5 (polycarbonate and nylon bowls), 2,0 (metal bowls)	
Temperature range [°C]	-5 to +60	
Filter element [µm]	40	
Oil bowl capacity [l]	0,2	
Min. lubricator flow [Nl/min]	25	33
Weight [kg]	3.48 (polycarbonate and nylon bowls), 3.72 (metal bowls)	
Supply contains	gauge (PPG-20),* bracket	

*) Gauge PPG-40 can only be used with a threaded adapter, order code PA-MAR302, see page 8-26

Order codes

PMACP501-20A M – BSP

Port size	
20A	G3/4“
25A	G1“

Bowl	
	polycarbonate
N	nylon
M	metal

Condensation draining	
–	semiautomatic
D	automatic

Semiautomatic condensation draining automatically drains when the primary pressure drops under 0,05 MPa.

For additional accessories, replacement filter elements and bowls, see page 8-25.

8

Dimensions

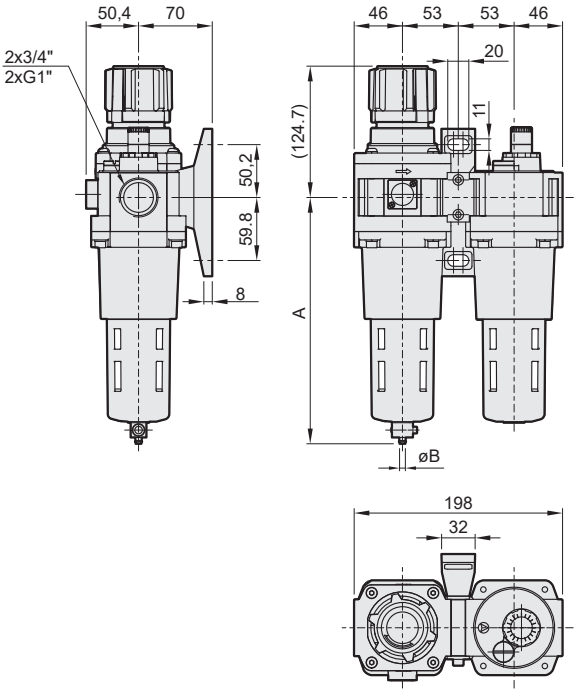

Semiautomatic condensation draining

Bowl	A	B - inner tube ø
polycarbonate nylon	233,8	6
metal	231,4	5

Automatic condensation draining

Bowl	A	B - outer tube ø
polycarbonate nylon	243,3	8
metal	243,3	8

Flow capacity

Flow rates at primary pressure 0,7 MPa

G3/4“

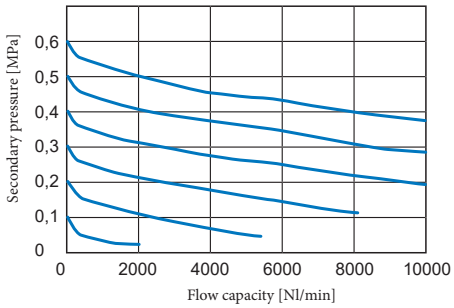

G1“

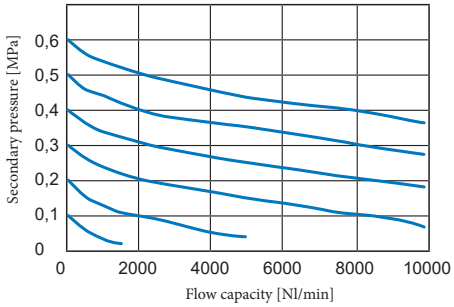

PRECISION REGULATOR SERIES MAIR

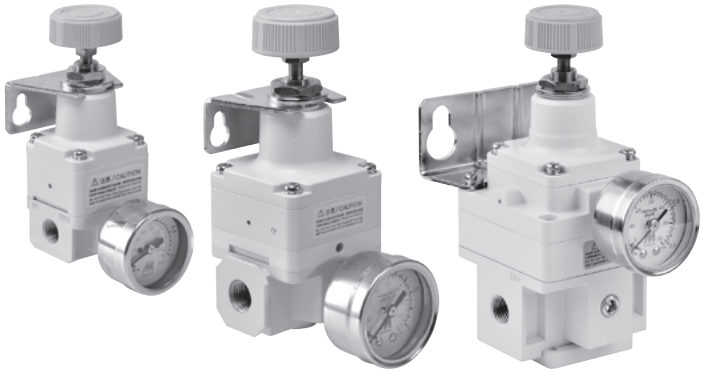

Precision pressure regulators are used for reduce of pressure to precise working pressure, which is automatically hold on selected value. It can be used especially in control applications, where the exact value of output pressure is required.

More information such as technical parameters and dimensions can be found on our website www.sappv.cz/r/j04e

For proper operation, the valve continuously consumes a small amount of compressed air after connecting the supply pressure and blows it out through the relief hole.

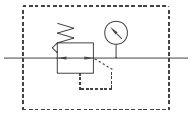

Port size	MAIR100	MAIR200	MAIR300		
	G1/8“	G1/4“	G1/4“	G3/8“	G1/2“
Primary pressure [MPa]	0 to 1,0 (setting pressure + 0,05 MPa)		0 to 1,0 (setting pressure + 0,10 MPa)		
Secondary pressure [MPa]	range 2K: 0,005 to 0,2 range 4K: 0,01 to 0,4 range 8K: 0,01 to 0,8				
Test presure [MPa]	1,5				
Air consumption [Nl/min]	4,4		11,5		
Output sensitivity [MPa]	0,2% of full span				
Output repeatability [MPa]	±0,5% of full span				
Temperature range [°C]	-5 to +60				
Weight [kg]	0,150	0,300	0,875		
Supply contains	gauge (R1/8“), bracket (elbow)				

Order codes

PMAIR 100 6A 2K BSP

Type - port size	
100 6A	MAIR100, G1/8“
200 8A	MAIR200, G1/4“
300 8A	MAIR300, G1/4“
300 10A	MAIR300, G3/8“
300 15A	MAIR300, G1/2“

Secondary pressure range	
2K	0,005-0,2 MPa
4K	0,01-0,4 MPa
8K	0,01-0,8 MPa

Caution

- If the air supply line contains drain or particlate, etc., the primary pressure fixed throttle can become clogged leading to malfunction, and therefore, be sure to use an air filter (MAF or MAM*) & mist separator.
- Never use a lubricator on the primary side of the regulator, as this will positively cause the fixed throttle to become clogged and result in a malfunction. If lubrication is required for terminal devices, connect a lubricator on the secondary side.
- When to be during maintenance, first reduce the precision regulatorset pressure to zero, and completely shut off the supply pressure.
- If a directional switching valve (solenoid valve, mechanical valve, etc.) is mounted on the primary side of the the precision regulator and repeatedly switched ON and OFF, wear of the nozzle/diaphragm section will be accelerated and a discrepancy in the setting value may occur. Therefore, avoid using a directional switching valve on the primary side. In the event a directional switching valve will be used, install it on the secondary side of the precision regulator.

8

Flow capacity

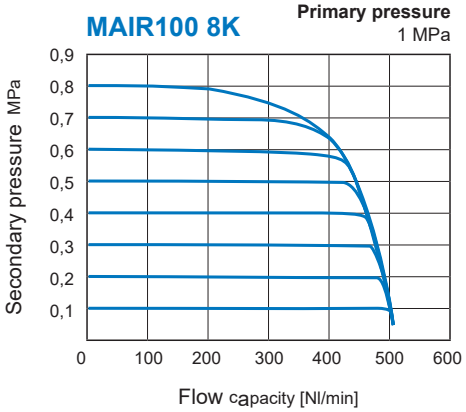

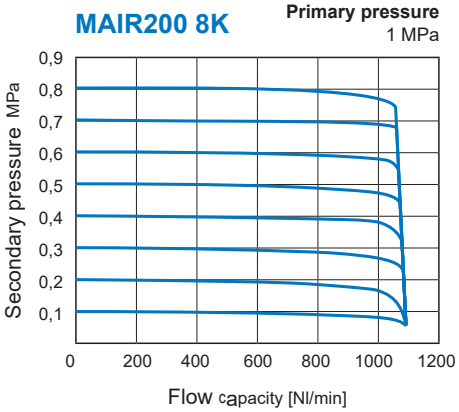

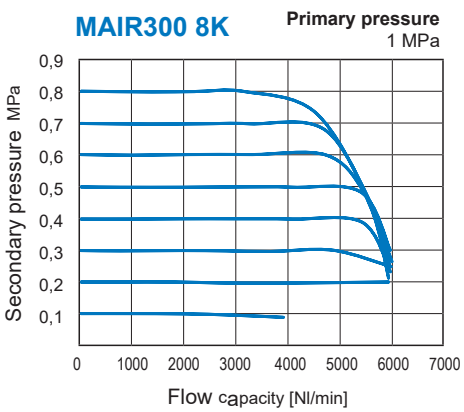

FILTERS SERIES MAF302, MAF401, AND MAF501

STRÁNSKÝ A PETRŽÍK

Primary air particulate filters are designed to separate liquid, water, rust, pipe scale, and debris from air lines. They should be installed upstream of the regulator and/or lubricator to prevent contamination from reaching other components.
Series 401 has got metal bowl with sight glass and series 302 and 501 have got polycarbonate or nylon bowl with plastic guard or metal bowl.

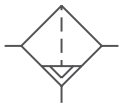

Port thread	MAF302			MAF401			MAF501	
	G1/4“	G3/8“	G1/2“	G1/4“	G3/8“	G1/2“	G3/4“	G1“
Flow at 0,7 MPa (Δp=0,03MPa) [Nl/min]	910	1100	1100	1300	2000	2500	7000	7000
Primary pressure [MPa] for semiautomatic drain	0,05 to 1			0,05 to 1,5			0,05 to 1 and 0,05 to 1,5 for metal bowl	
Primary pressure [MPa] for automatic drain	0,15 to 1			0,15 to 1			0,15 to 1	
Test pressure [MPa]	1,5			2			1,5, 2 for metal bowl	
Temperature range [°C]	-5 to +60			-5 to +60			-5 to +60	
Filter element [μm]	5			40			40	
Weight [kg]	0,34			0,48			1.18, 1.30 for metal bowl	
Supply contains	bracket (C-shaped)			bracket (C-shaped)			bracket (elbow)	

Order codes

PMAF401-10A – 5u – BSP

Port size	
401-8A	G1/4“
401-10A	G3/8“
401-15A	G1/2“

Condensation draining	
–	semiautomatic
D	automatic

PMAF501-20A M – BSP

Port size	
302-8A	G1/4“
302-10A	G3/8“
302-15A	G1/2“
501-20A	G3/4“
501-25A	G1“

Bowl	
	polycarbonate
N	nylon
M	metal

Condensation draining	
–	semiautomatic
D	automatic

Semiautomatic condensation draining automatically drains when the primary pressure drops under 0,05 MPa.

For additional accessories, replacement filter elements and bowls, see page 8-25.

8

Flow capacity

Flow rates at primary pressure 0,7 MPa

MAF302

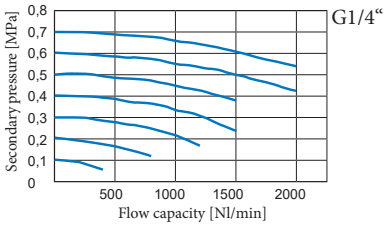

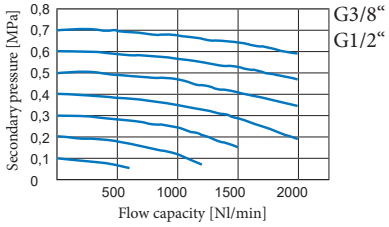

MAF401

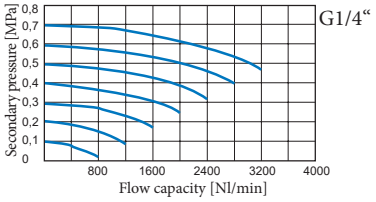

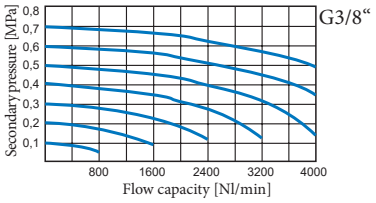

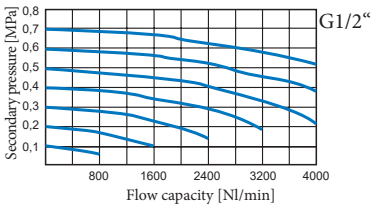

MAF501

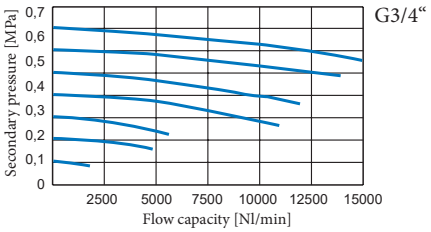

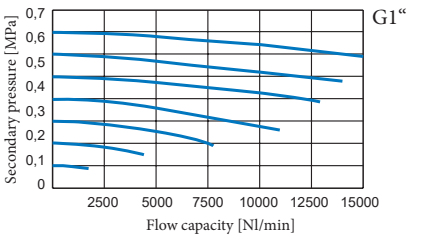

Dimensions

MAF302

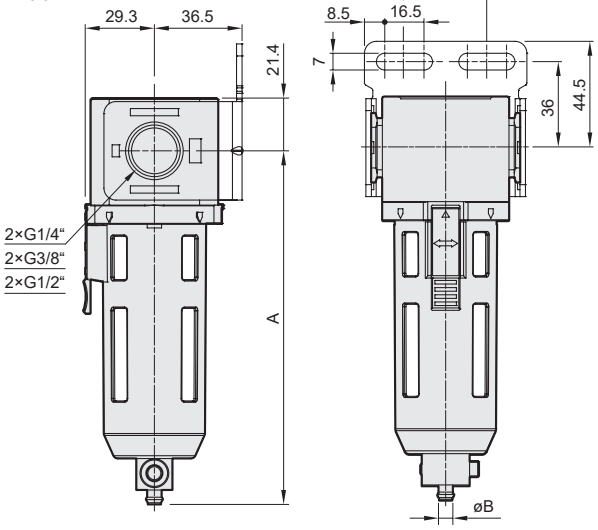

Semiautomatic condensation draining

Bowl	A	B - inner tube ø
polycarbonate nylon	147,1	6
metal	147,2	5

Automatic condensation draining

Bowl	A	B - outer tube ø
polycarbonate nylon	156,6	8
metal	159,1	8

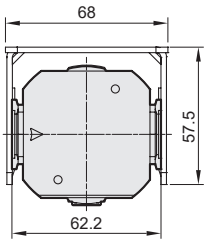

MAF401

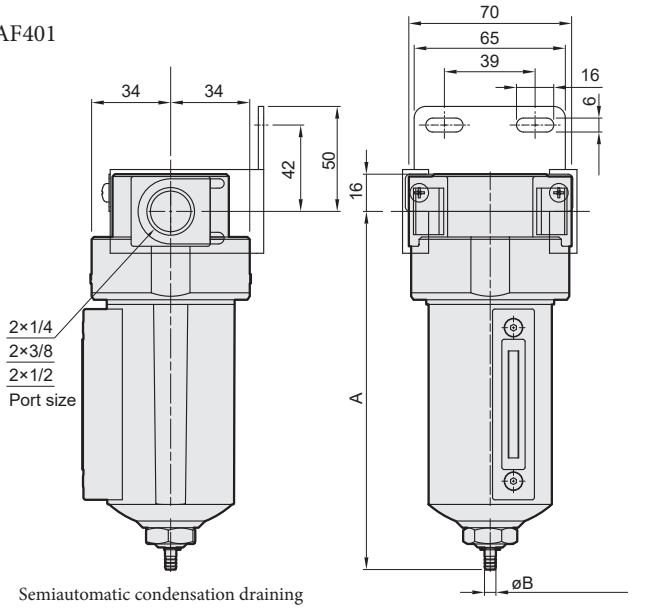

Semiautomatic condensation draining

Bowl	A	B - inner tube ø
metal	154	5

Automatic condensation draining

Bowl	A	B - outer tube ø
metal	166	8

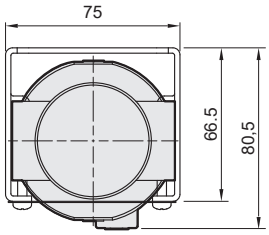

MAF501

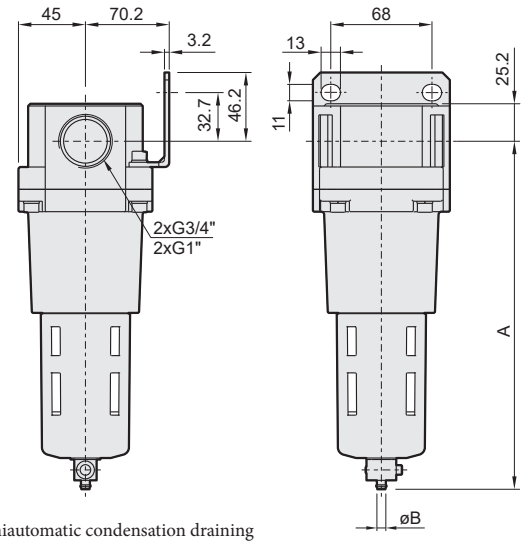

Semiautomatic condensation draining

Bowl	A	B - inner tube ø
polycarbonate nylon	233,8	6
metal	231,4	5

Automatic condensation draining

Bowl	A	B - outer tube ø
polycarbonate nylon	243,3	8
metal	243,3	8

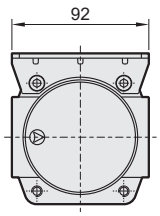

REGULATOR SERIES MAR200, MAR302, MAR401 AND MAR501

STRÁNSKÝ A PETRŽÍK

Pressure regulators are used to reduce pressure to working pressure, which is automatically held on the selected value. By using an optimal pressure, longer lifetime of pneumatic components can be reached as well as resources necessary for production of compressed air can be saved.

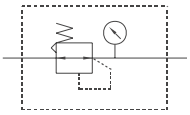

Port size	MAR200	MAR302			MAR401			MAR501	
	G1/4“	G1/4“	G3/8“	G1/2“	G1/4“	G3/8“	G1/2“	G3/4“	G1“
Primary pressure [MPa]	0,05 to 0,99	0,05 to 0,99			0,1 to 1,5			0,1 to 1,5	
Secondary pressure [MPa]	0,05 to 0,85	0,05 to 0,85			0,1 to 0,85			0,1 to 0,85	
Test pressure [MPa]	1,5	1,5			2,0			2,0	
Temperature range [°C]	-5 to +60	-5 to +60			-5 to +60			-5 to +60	
Weight [kg]	0,20	0,27			0,45			1.46	
Supply contains	gauge (PPG-40, R1/8“), bracket	gauge (PPG-20)*, bracket			gauge (PPG-20)*, bracket			gauge (PPG-20)*, bracket	

*) Gauge PPG-40 can only be used with a threaded adapter, order code PA-MAR302 (for series 302 and 501) or order code PA-MAR401 (for series 401), see page 8-26

Order codes

PMAR200-8A – BSP

Port size	
200-8A	G1/4“
302-8A	G1/4“
302-10A	G3/8“
302-15A	G1/2“
401-8A	G1/4“
401-10A	G3/8“
401-15A	G1/2“
501-20A	G3/4“
501-25A	G1“

Flow capacity

Flow rates at primary pressure 0,7 MPa

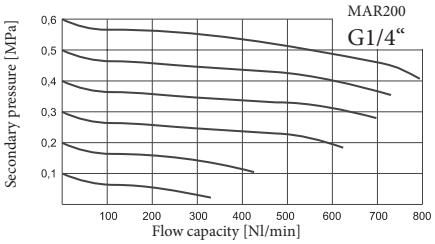

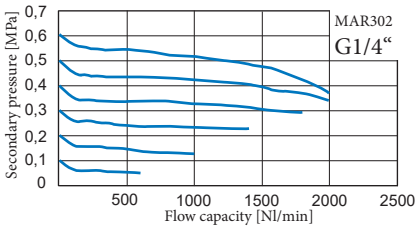

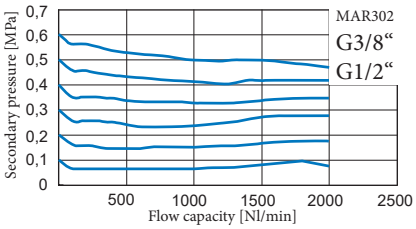

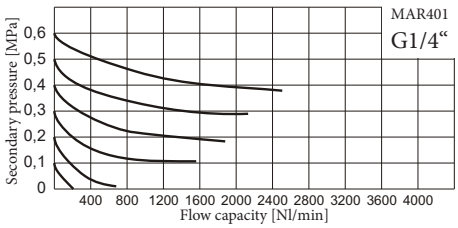

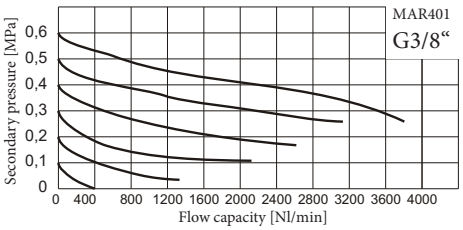

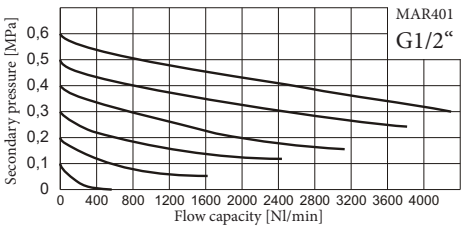

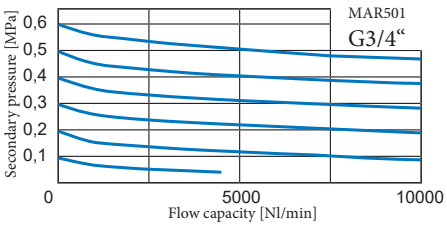

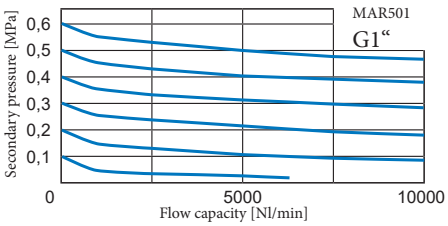

Dimensions

MAR200

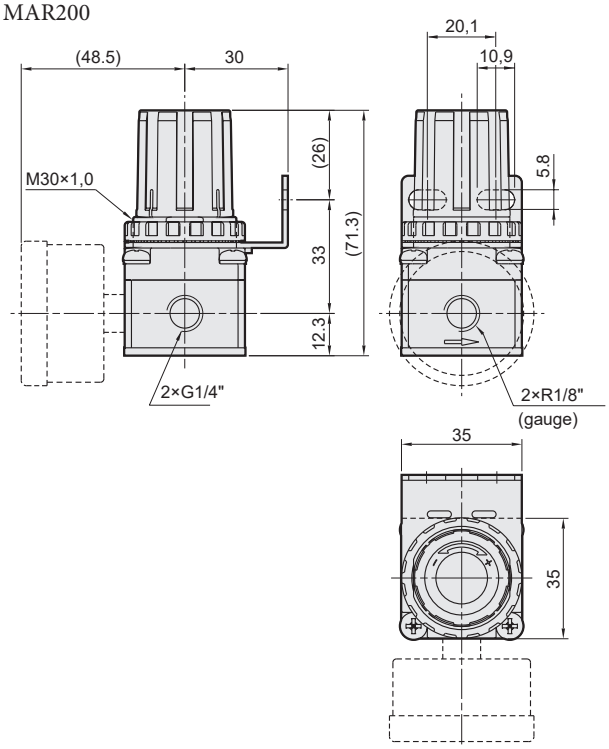

MAR302

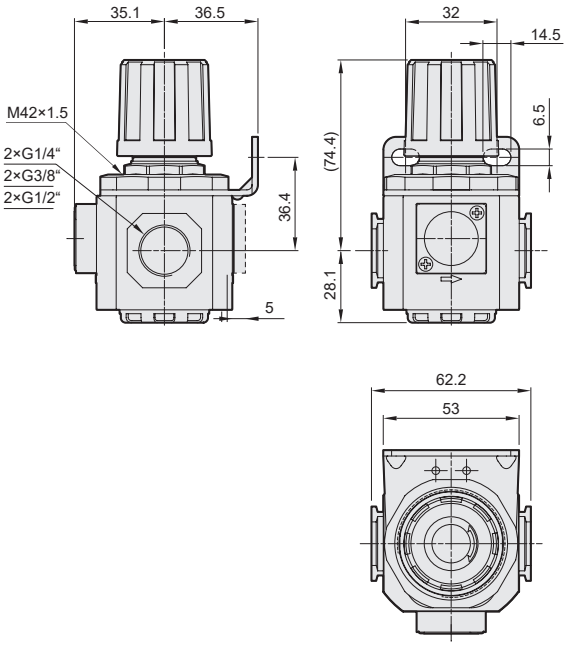

MAR401

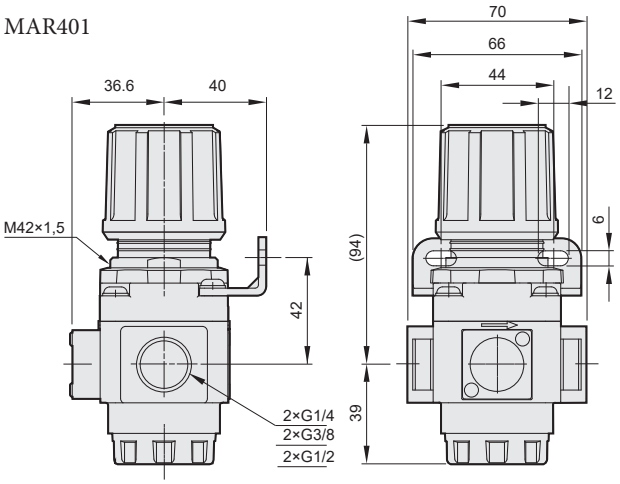

MAR501

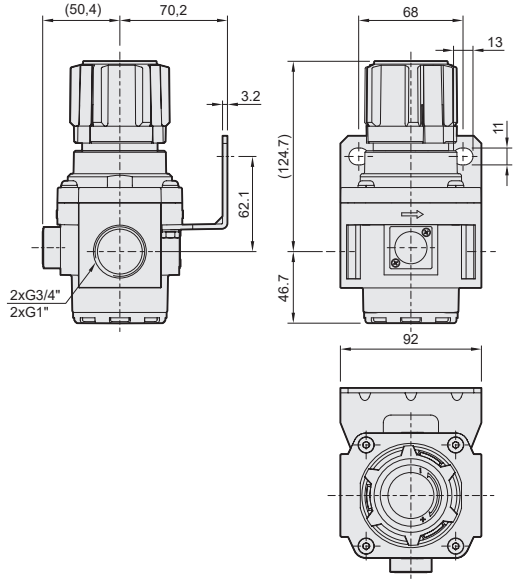

8

PARTICULAR FILTER WITH REGULATOR SERIES MAFR302, MAFR401 AND MAFR501

STRÁNSKÝ A PETRŽÍK

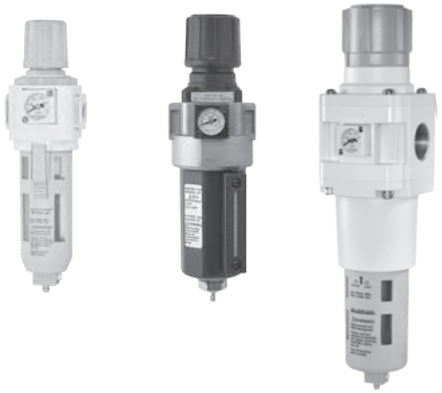

The integral part of the particulate filter/regulator ('piggyback') is a two station component designed to filter and regulate compressed air when cost and space are of primary concern.
Series 401 has got metal bowl with sight glass and series 302 and 501 have got polycarbonate or nylon bowl with plastic guard or metal bowl.

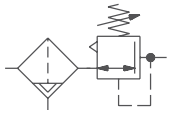

Port size	MAFR302			MAFR401			MAFR501	
	G1/4“	G3/8“	G1/2“	G1/4“	G3/8“	G1/2“	G3/4“	G1“
Primary pressure [MPa] for semiautomatic drain	0,05 to 1			0,05 to 1,5			0,05 to 1 and 0,05 to 1,5 for metal bowl	
Primary pressure [MPa] for automatic drain	0,15 to 1			0,15 to 1			0,15 to 1	
Secondary pressure [MPa]	0,05 to 0,85			0,1 to 0,85			0,1 to 0,85	
Test pressure [MPa]	1,5			2,0			1,5, 2 for metal bowl	
Filter element [μm]	5			5			40	
Temperature range [°C]	-5 to +60			-5 to +60			-5 to +60	
Weight [kg]	0,49			0,80			1.94, 2,06 for metal bowl	
Supply contains	gauge (PPG-20)*, bracket (elbow)			gauge (PPG-20)*, bracket (elbow)			gauge (PPG-20)*, bracket (elbow)	

*) Gauge PPG-40 can only be used with a threaded adapter, order code PA-MAR302 (for series 302 and 501) or order code PA-MAR401 (for series 401), see page 8-26

Order codes

PMAFR401-10A – 5u – BSP

Port size	
401-8A	G1/4“
401-10A	G3/8“
401-15A	G1/2“

Condensation draining	
–	semiautomatic
D	automatic

PMAFR501-20A M – BSP

Port size	
302-8A	G1/4“
302-10A	G3/8“
302-15A	G1/2“
501-20A	G3/4“
501-25A	G1“

Bowl	
	polycarbonate
N	nylon
M	metal

Condensation draining	
–	semiautomatic
D	automatic

Semiautomatic condensation draining automatically drains when the primary pressure drops under 0,05 MPa.

Flow capacity

Flow rates at primary pressure 0,7 MPa

MAFR302

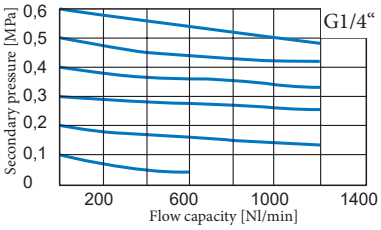

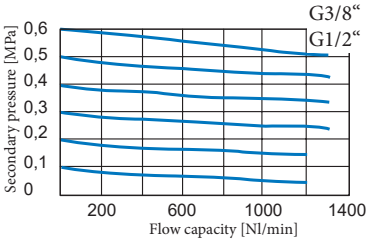

MAFR401

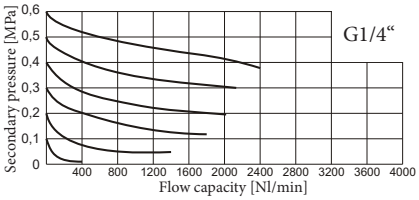

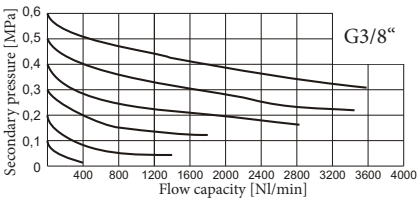

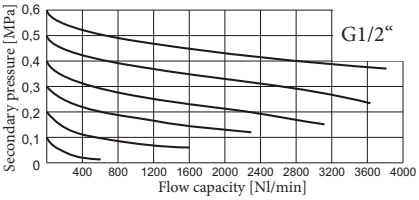

MAFR501

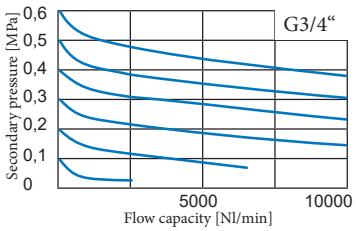

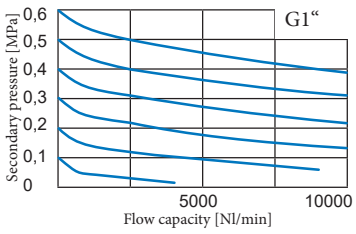

Dimensions

MAFR302

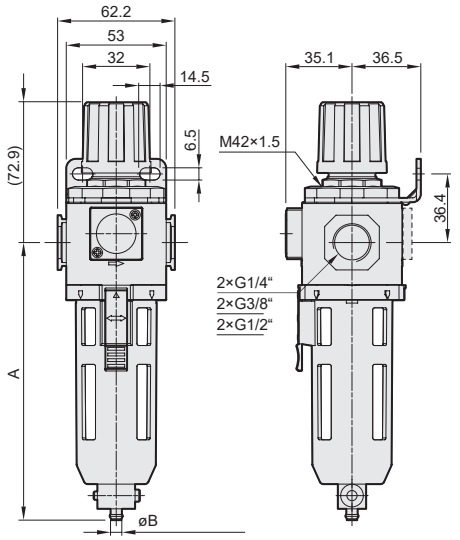

Semiautomatic condensation draining

Bowl	A	B - inner tube ø
polycarbonate nylon	147,1	6
metal	147,2	5

Automatic condensation draining

Bowl	A	B - outer tube ø
polycarbonate nylon	156,6	8
metal	159,1	8

MAFR401

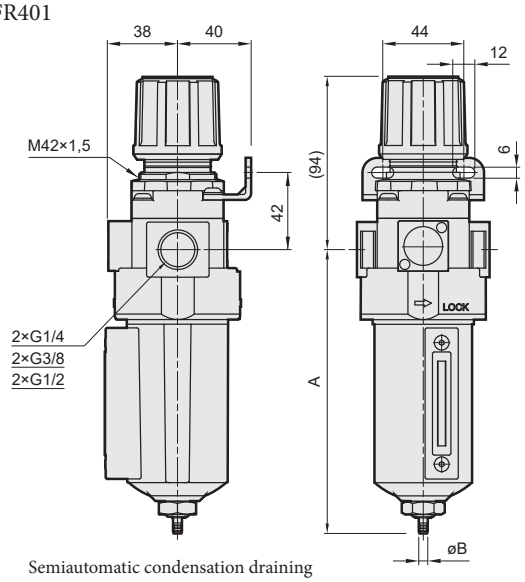

Semiautomatic condensation draining

Bowl	A	B - inner tube ø
metal	154	5

Automatic condensation draining

Bowl	A	B - outer tube ø
metal	166	8

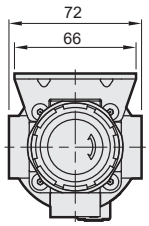

MAFR501

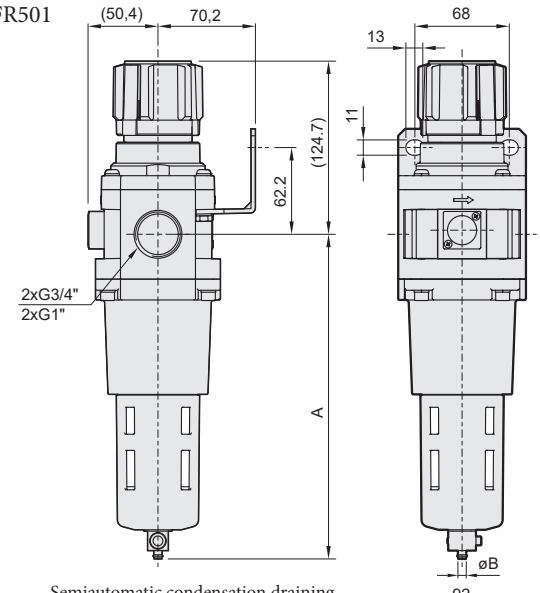

Semiautomatic condensation draining

Bowl	A	B - inner tube ø
polycarbonate nylon	233,8	6
metal	231,4	5

Automatic condensation draining

Bowl	A	B - outer tube ø
polycarbonate nylon	243,3	8
metal	243,3	8

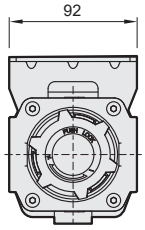

For additional accessories, replacement filter elements and bowls, see page 8-25.

LUBRICATOR
SERIES MAL302, MAL401 AND MAL501

Usually mounted third in the FRL Series, the lubricator is designed to inject oil aerosols into the airstream of a pneumatic circuit.
Series 401 has got metal bowl with sight glass and series 302 and 501 have got polycarbonate or nylon bowl with plastic guard or metal bowl.

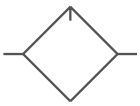

Port size	MAL302			MAL401			MAL501	
	G1/4“	G3/8“	G1/2“	G1/4“	G3/8“	G1/2“	G3/4“	G1“
Flow at 0,7 MPa (Δp=0,03MPa) [Nl/min]	910	1100	1100	1200	2000	2100	11000	11000
Primary pressure [MPa]	0 to 0,99			0 to 1,5			0 to 1 (0 to 1,5)*	
Test pressure [MPa]	1,5			2			1,5 (2)*	
Temperature range [°C]	-5 to +60			-5 to +60			-5 to +60	
Min. lubricator flow [Nl/min]	50	60	60	30	65	80	25	33
Oil bowl capacity [l]	0,065			0,2			0,2	
Weight [kg]	0,35			0,545			1,26 (1.38)*	
Supply contains	bracket (C-shaped)			bracket (C-shaped)			bracket (elbow)	

*) Values in the brackets are valid for metal bowl for series 501.

Order codes

PMAL401-10A – BSP

Port size	
401-8A	G1/4“
401-10A	G3/8“
401-15A	G1/2“

PMAL501-20A M – BSP

Port size	
302-8A	G1/4“
302-10A	G3/8“
302-15A	G1/2“
501-20A	G3/4“
501-25A	G1“

Bowl	
	polycarbonate
N	nylon
M	metal

For additional accessories, replacement filter elements and bowls, see page 8-25.

Dimensions

MAL302

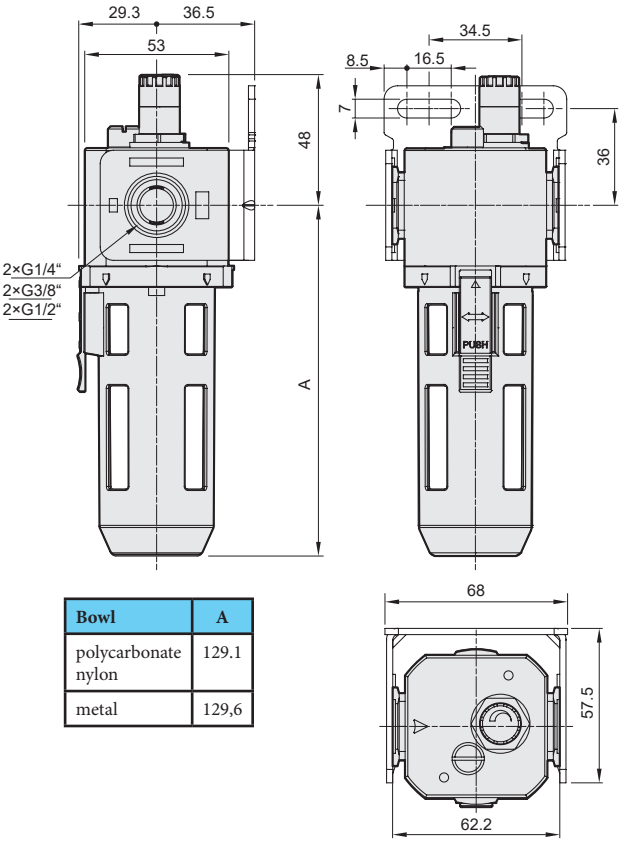

Bowl	A
polycarbonate nylon	129.1
metal	129,6

MAL401

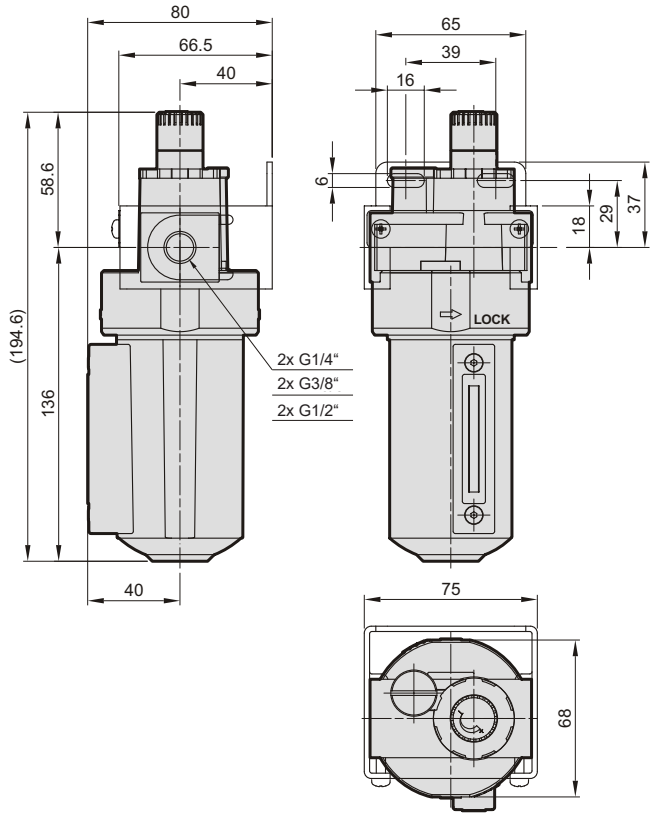

MAL501

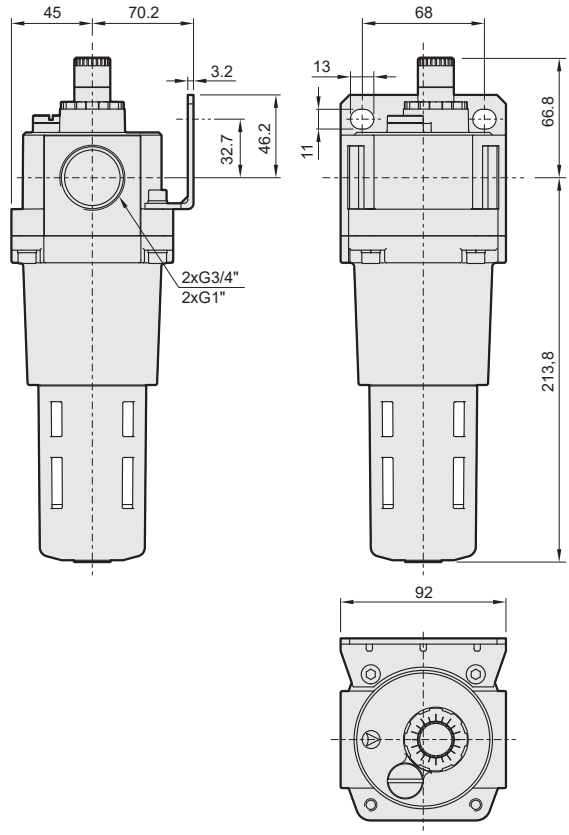

8

COALESCING FILTERS SERIES MAF302, MAF401 AND MAF501

STRÁNSKÝ A PETRŽÍK

The coalescing filter is utilized when either clean air is required or longer component life is desired. This type of filter removes water and oil aerosols. It works differently than the particulate filter; dirty air enters the element from the centre and passes through a field of glass fibres which cause the aerosols to form into droplets which are heavier than the surrounding air. The droplets grow larger as they pass through the element and gravity causes the oil drops to drain to the sump of the bowl. By removing the harmful oil varnishes and contaminant that attack seals and gaskets, the valve or cylinder is much less likely to stick. To maximize the life of a coalescing filter it should always be used after a 5 micron particulate filter. Series 401 has got metal bowl with sight glass and series 302 and 501 have got polycarbonate, nylon or metal bowl.

Series Port size		MAF302			MAF401			MAF501	
		G1/4“	G3/8“	G1/2“	G1/4“	G3/8“	G1/2“	G3/4“	G1“
Flow at 0,7 MPa (Δp=0,03MPa) [Nl/min]	filter element 0,3 µm	1100	1800	2000	1250	1900	2300	6000	7000
	filter element 0,01 µm	1000	1700	1800	1200	1850	2200	5000	6000
Primary pressure [MPa] for semiautomatic drain		0,05 to 1			0,05 to 1,5			0,05 to 1 and 0,05 to 1,5 for metal bowl	
Primary pressure [MPa] for automatic drain		0,15 to 1			0,15 to 1			0,15 to 1	
Test pressure [MPa]		1,5			2			1,5 and 2 for metal bowl	
Temperature range [°C]		-5 to +60			-5 to +60			-5 to +60	
Filter element [µm]		0,3 and 0,01			5, 0,3 and 0,01			0,3 and 0,01	
Drain capacity [cm³]		35			70			75 and 70 for metal bowl	
Weight [kg]		0,37			0,48			1,18 and 1,3 for metal bowl	
Supply contains		bracket (C-type)			bracket (C-type)			bracket (L-type)	

Order codes

Series MAF302

PMAF302 D – 10A – N D – B–G

Filter element	
D	0,3 µm
M	0,01 µm

Port size	
8A	G1/4“
10A	G3/8“
15A	G1/2“

Bowl	
	polycarbonate
N	nylon
M	metal

Condensation draining	
	semiautomatic
D	automatic

Semiautomatic condensation draining automatically drains when the primary pressure drops under 0,05 MPa.

Replace filter element at least once per year or when pressure drop reaches 0,07 MPa.

For additional accessories, replacement filter elements and bowls, see page 8-25.

Series MAF401

PMAF401 D – 10A – D –B–G

Filter element	
D	0,3 µm
M	0,01 µm

Port size	
8A	G1/4“
10A	G3/8“
15A	G1/2“

Condensation draining	
	semiautomatic
D	automatic

Series MAF501

PMAF501 D – 20A – N D – B–G

Filter element	
D	0,3 µm
M	0,01 µm

Port size	
20A	G3/4“
25A	G1“

Bowl	
	polycarbonate
N	nylon
M	metal

Condensation draining	
	semiautomatic
D	automatic

Flow capacity

MAF302D (Filter element: 0,3 µm)

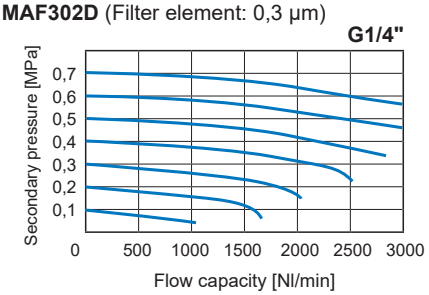

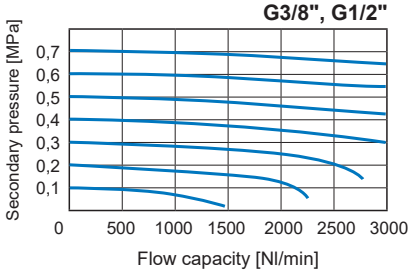

MAF302M (Filter element: 0,01 µm)

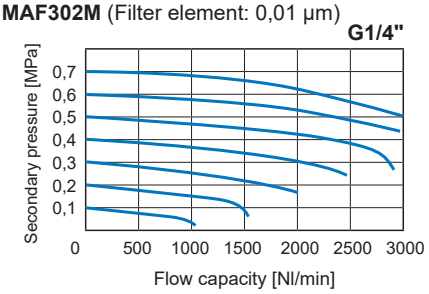

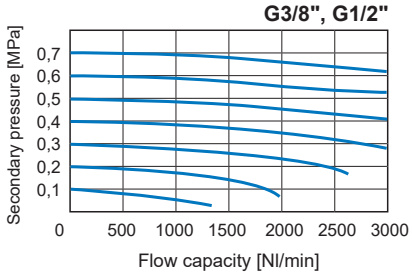

MAF401D (Filter element: 0,3 µm)

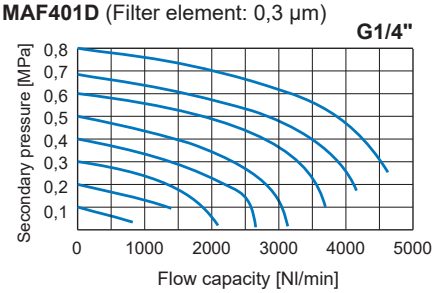

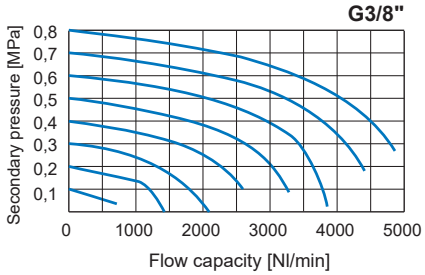

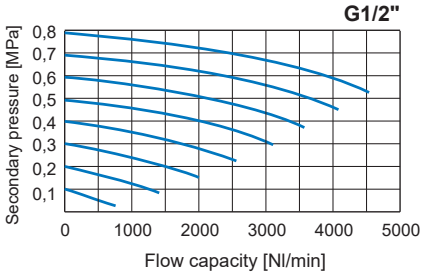

MAF401M (Filter element: 0,01 µm)

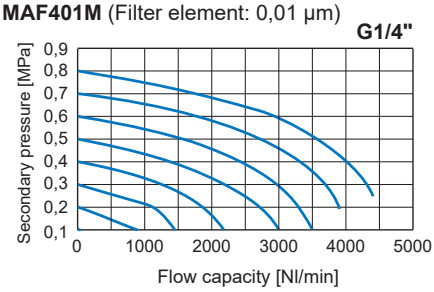

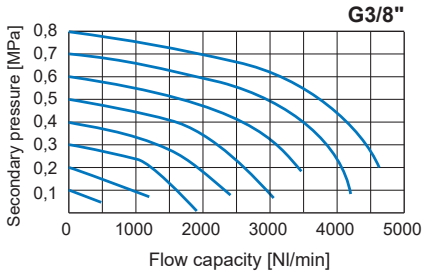

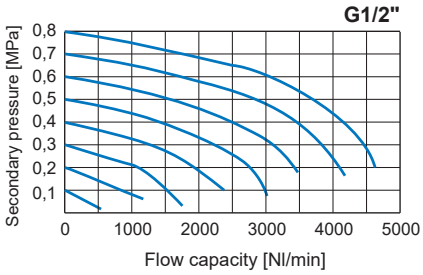

MAF501D (Filter element: 0,3 µm)

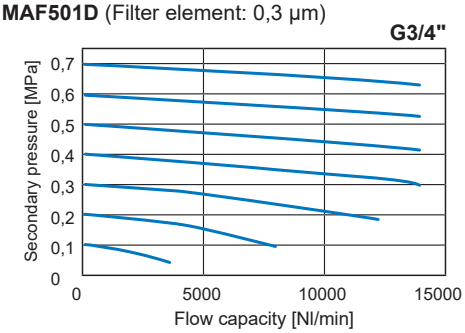

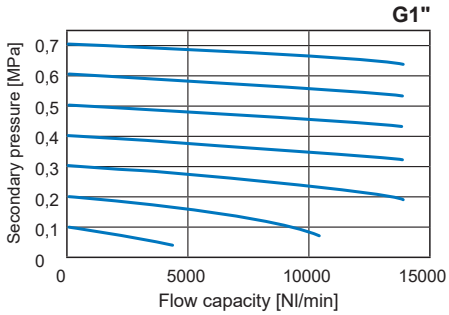

MAF501M (Filter element: 0,01 µm)

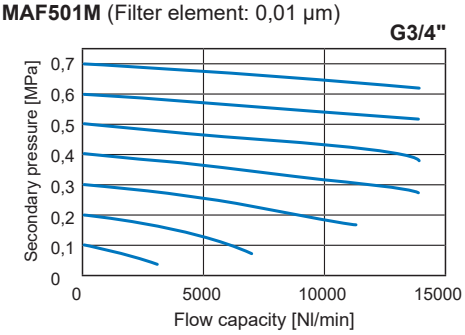

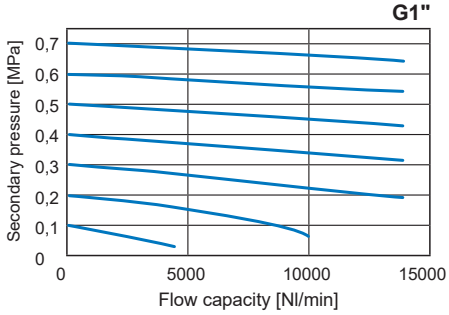

Dimensions

MAF302

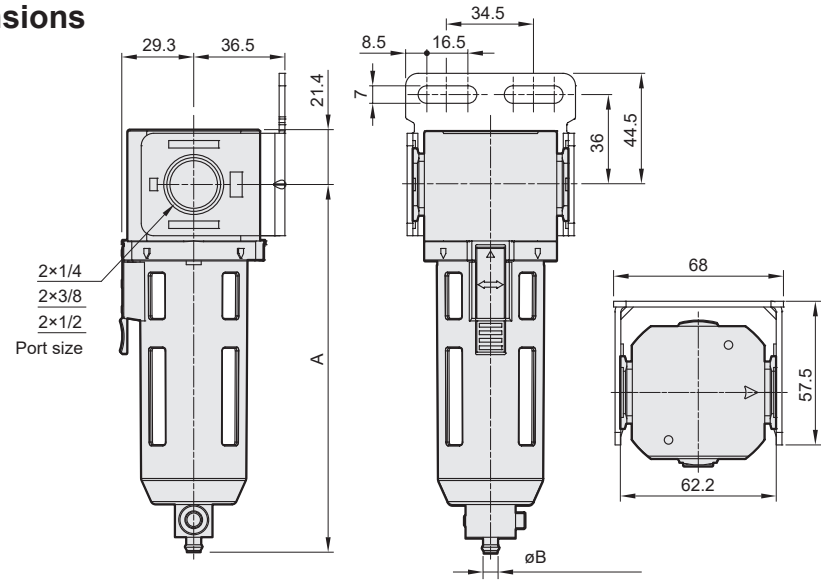

Semiautomatic condensation draining

Bowl	A	B - inner tube ø
polycarbonate nylon	147,1	6
metal	147,2	5

Automatic condensation draining

Bowl	A	B - outer tube ø
polycarbonate nylon	156,6	8
metal	159,1	8

MAF401

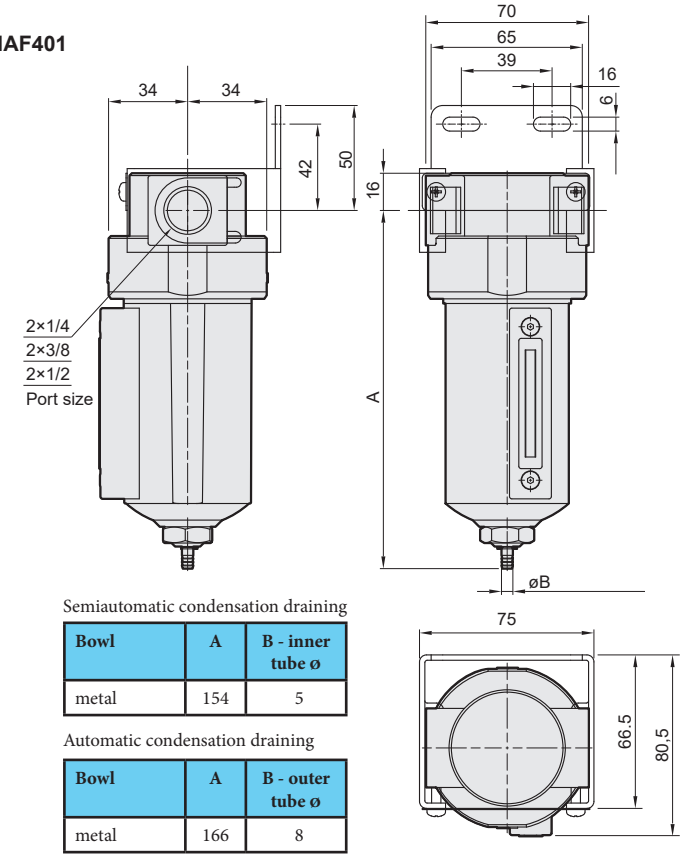

Semiautomatic condensation draining

Bowl	A	B - inner tube ø
metal	154	5

Automatic condensation draining

Bowl	A	B - outer tube ø
metal	166	8

MAF501

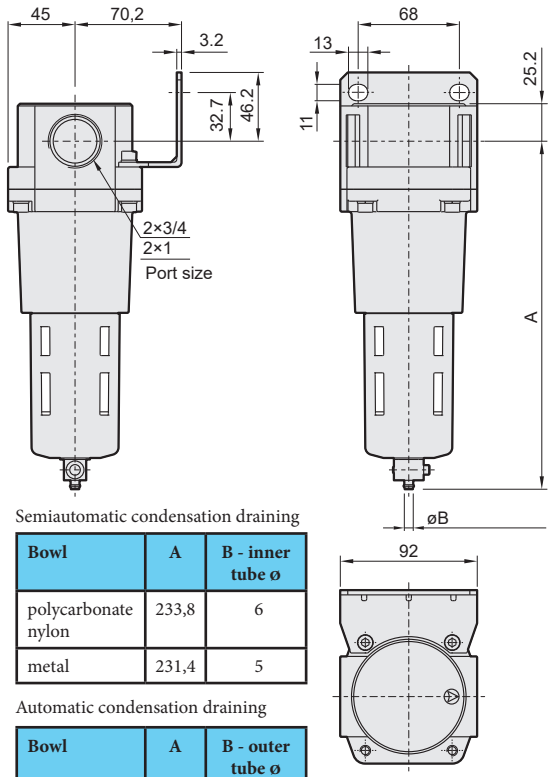

Semiautomatic condensation draining

Bowl	A	B - inner tube ø
polycarbonate nylon	233,8	6
metal	231,4	5

Automatic condensation draining

Bowl	A	B - outer tube ø
polycarbonate nylon	243,3	8
metal	243,3	8

COALESCING FILTERS SERIES MJF

A range of fine filters designed primarily as main filters in compressed air supply systems. The filter cartridges have up to 98% pore volume, which ensures long service life and low operating costs. Thanks to the folded design of the filter media, the cartridge provides a significantly larger filtration area than a conventional cylindrical filter. This means a higher dirt retention capacity, lower pressure losses and thus more economical operation. The internal and external stainless steel reinforcements of the filter cartridge protect the filter media and form a mechanical pre-filter, which increases the efficiency of dirt separation.

Size	10F	15F	25F	40F	60F	100F	150F
Threads	R1/2“	R3/4“	R1“	R1 1/2“	R1 1/2“	R2“	R2 1/2“
Max. capacity [Nm³/min] at 0,7 MPa	1,6	2,4	3,6	5,5	8,1	15	25
Weight [kg]	1,3	1,3	3,6	3,6	6,7	8,9	11,0

Filter element	CP	TU	AH	HC
Features	coarse pre-filtration	general pre-filtration	high perf. filtration	activated carbon filter
Size of particles removed [µm]	3,0	1,0	0,01	-
Oil contaminant retention down to [mg/m³]	-	0,1	0,01	0,003
Nominal initial pressure drop [mbar]	0,03	0,05	0,09	0,1
Max. operating temperature [°C]	80	60	60	60
Life time [h]	8000	8000	8000	1000

Order codes

Complete filter

PMJF– CP – 60F H1 –D–G

Filter element	
CP	3 µm
TU	1 µm
AH	0,01 µm
HC	act. carbon

Thread size	
10F	R1/2“
15F	R3/4“
25F	R1“
40F	R1 1/2“
60F	R1 1/2“
100F	R2“
150F	R2 1/2“

Pressure range	
	up to 1 MPa
H1	1 to 2 MPa
H2	2 to 3 MPa
H3	3 to 4 MPa
H4	4 to 5 MPa

Note: the body is made of Al alloy, for variants H1-H4 the body is made of steel

Options	
	manual drain (up to 1,6 MPa)
-D	auto drain (up to 5,0 MPa)
-G	manual drain, differential pressure gauge
-D-G	auto drain, differential pressure gauge

Inlet pressure must be considered when determining the appropriate size. Please see the following page for details.

MJF series filters have R pipe threads!

The CP, TU and AH filter elements must be replaced every 12 months or when the contamination indicator is in the red field.
The HC filter element must be replaced after 1000 hours of operation.

When the filter element is dirty (the differential pressure gauge indicator is in the red field), the pressure difference is at least 0,06 MPa.

Spare filter element

P C – NF2Ex1

Filter element	
C	3 µm (CP)
T	1 µm (TU)
A	0,01 µm (AH)
H	act.carbon (HC)

Thread size	
NF1Ex1	R1/2“ (10F) & R3/4“ (15F)
NF2Ex1	R1“ (25F) & R1 1/2“ (40F)
NF3Ex1	R1 1/2“ (60F)
NF4Ex1	R2“ (100F)
NL1Ex1	R2 1/2“ (150F)

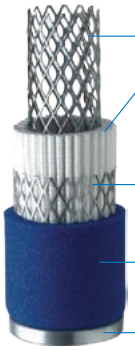

Dimensions

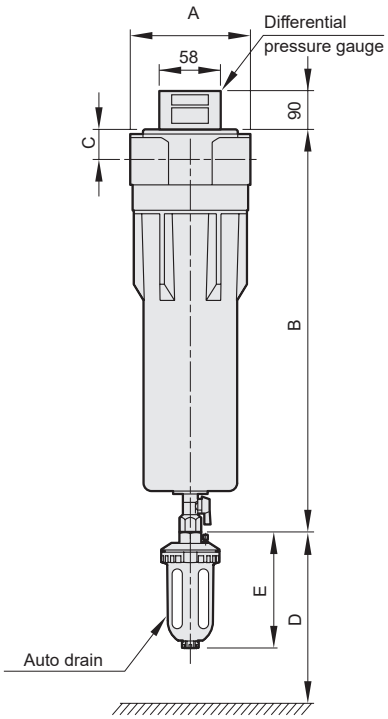

Manual drain

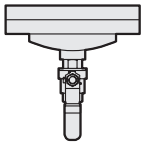

D: Auto drain
for (**H1~H4**) high pressure

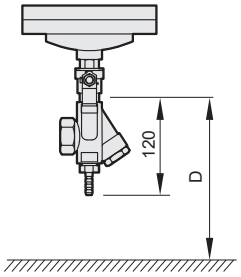

Size	Thread	A	B	C	D	E
10F	R1/2“	87	303	24	380	200
15F	R3/4“	87	303	24	380	200
25F	R1“	130	325	43	390	200
40F	R1 1/2“	130	325	43	390	200
60F	R1 1/2“	130	740	43	630	200
100F	R2“	163	762	55	790	200
150F	R2 1/2“	163	1017	55	900	200

Filter size selection

To correctly select the filter size, it is necessary to base it on the lowest inlet pressure and the highest expected flow rate.

1. Determine the value of the minimum working (inlet) pressure (e.g. 0,55 MPa) and the maximum compressed air flow rate (e.g. 5 Nm^3/min) at the filter inlet.
2. Select the conversion factor corresponding to the minimum inlet pressure from the table below (always round the pressure down, e.g. for 0,45 MPa, use the correction factor 1,54 (value for 0,4 MPa)).
3. Calculate the minimum filtration capacity by multiplying the required flow rate by the conversion factor (e.g. 5 * 1,54 = 7,7)
4. Select the filter model using the minimum filtration capacity value (the selected filter must have a flow rate equal to or greater than the calculated minimum filtration capacity). So for our example we cannot choose size 40F which would correspond to the required flow rate of 5 Nm^3/min, but we must choose size 60F which corresponds to the calculated minimum filtration capacity of 7,7 Nm^3/min.

Inlet pressure [MPa]	0,1	0,2	0,3	0,4	0,5	0,6	0,7	0,8	0,9	1,0	1,1	1,2	1,3	1,4	1,5	1,6
Conversion factor	4,00	2,63	2,00	1,54	1,33	1,14	1,00	0,88	0,80	0,72	0,67	0,61	0,57	0,53	0,50	0,47

Example of use

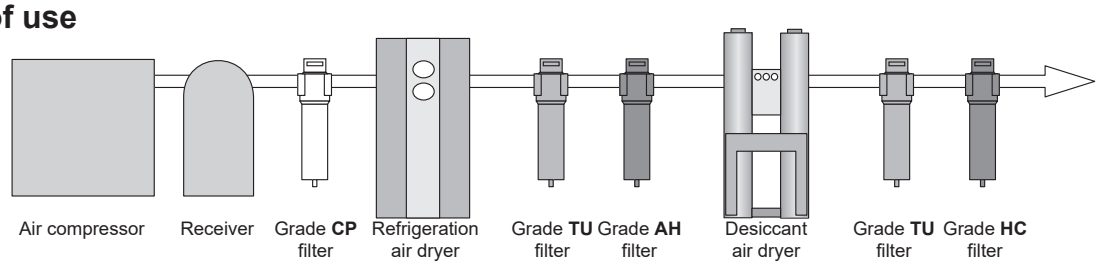

The TU cartridge filter is installed after the desicant air dryer to remove mechanical impurities from the dryer. However, it must be connected in reverse and automatic drain is not required.

The HC cartridge filter is used to remove oil mist and odors. Automatic drain and differential pressure gauge are not required.

SOFT START-UP VALVE SERIES MAVS401

Soft start-up valve is used everywhere, where items in line behind the valve should be secured against intense pressure rise after connection to air supply, as is common when hand valve or quick connect couplings are used. When the valve is energized or manually operated, output pressure will increase gradually with flow rate, which can be adjusted. After specific pressure (see chart) is reached, full pressure and flow is switched to output. When the valve is de-energized or switched off manually, input is closed and air from the line will be quickly exhausted.

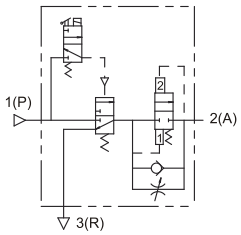

Port size	G1/2“
Flow at 0,7 MPa (Δp=0,03MPa) [Nl/min]	3000 in direction 1(P)→2(A); 3800 in direction 2(A)→3(R)
Primary pressure [MPa]	0,25 to 1,0
Temperature range [°C]	0 to +60
Power input [VA / W]	inrush 6, hold 4.9 for AC; 2.5 for DC
Insulation class	F
Weight [kg]	0,8
Supply contains	with connector, optionally with gauge, bracket on request

Order codes

PMAVS4001 C D24 L

Gauge	
	without gauge
C	with gauge

Voltage	
D24	24 V DC ± 10%
A220	230 V AC ± 10%, 50-60 Hz
A24	24 V AC ± 10%, 50-60 Hz

Connector	
	standard
L	with LED

Valve can be used standalone, or should be attached using connection plate (order code PMACP401-C) with other units of series 401.

The total effective orifice of piping and components on the P port side must be equal or larger than 35 mm². When the air current is restricted or insufficient pressure, the main valve will not function / switch normally and it could cause air to leak from the R port.

Dimensions

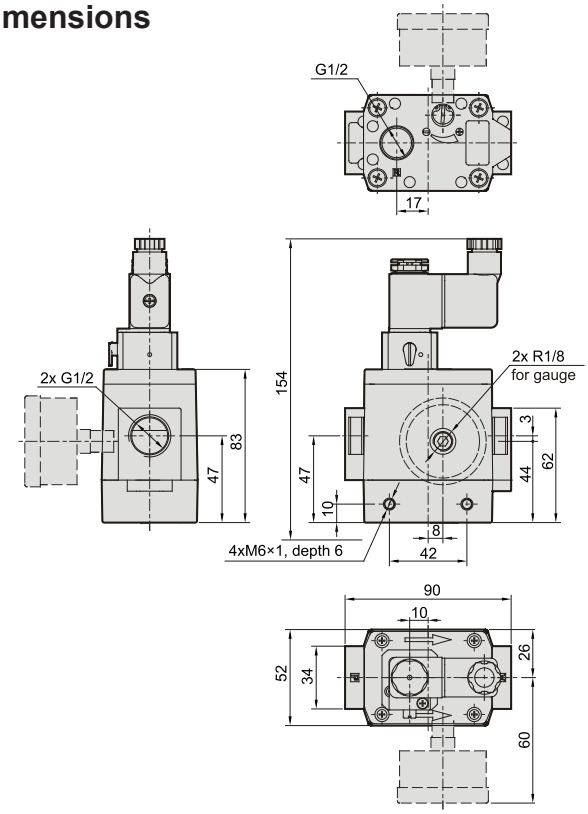

Full pressure and flow capacity switching point

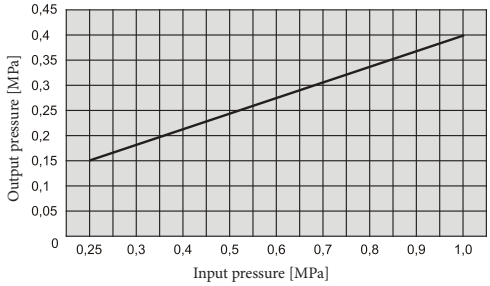

Slow start-up flow capacity characteristics

Input pressure 0,5 MPa

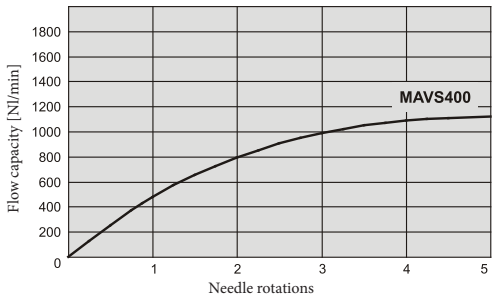

ELECTRO-PNEUMATIC REGULATOR SERIES MAER200

STRÁNSKÝ A PETRŽÍK

The electro-pneumatic regulator is used for continuous electronic regulation of the output pressure based on the voltage or current input signal. The outlet pressure can therefore be dynamically adapted to the requirements of the application. The valve is also equipped with an output that can be further processed. High accuracy is achieved thanks to the integrated processor and PID control. The maximum flow at an inlet pressure of 1 MPa and an outlet pressure of 0,6 MPa is up to 1500 Nl/min.

A model controlled by RS-232 / RS-485 with Modbus protocol is also available. For more information, contact the technical department.

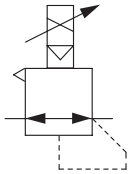

Type		MAER200		
Pressure range (see order code)		**1K**	**5K**	**9K**
Port size		in/out: G1/4“, G3/8“, relief: G1/4“, control exhaust: M5		
Medium		modified compressed air		
Test pressure [MPa]		0,3	1,5	1,5
Temperature range [°C]		-5 to +50		
Min. supply pressure [MPa]		set pressure + 0,1		
Max. supply pressure [MPa]		0,2	0,7	1,0
Setting pressure range [MPa]		0,005 to 0,1	0,005 to 0,5	0,009 to 0,9
Supply voltage [V]		24V DC ±10%		
Power consumption [A]		0,08 or less		
Input signal	current type [mA]	DC, 4 to 20, impedance ≤ 400 Ω		
	voltage type [V]	DC, 0 to 5, or 0 to 10, impedance approx. ≤ 50 kΩ		
	preset input	4 points (one point should be set to zero due to safety reasons, combinations of 2 input signals), impedance approx. ≤ 1000 kΩ		
Output signal	analog	DC output current 4 to 20 mA (load impedance 750Ω or less), DC output voltage 1 to 5 V (load impedance 1kΩ or above)		
	switch	PNP or NPN output, max. voltage 24V DC, max. current 160 mA		
Linearity		within ±1% F.S.		
Hysteresis		within 0,5% F.S.		
Repeatability		within ±0,5% F.S.		
Sensitivity		within 0,2% F.S.		
Temperature characteristics		within ±0,2% F.S./°C		
Output pressure display		precision: ±2% F.S., ±1 digit, min. unit: 0,001 (MPa), 0,01 (bar, kg/cm²), 0,1 (psi), 1 (kPa)		
Enclosure		equivalent to IP65		
Weight [kg]		valve: 0,36, bracket: 0,086 (L type), 0,08 (flat type), connector with cable: 0,055 (1m), 0,13 (3m)		

Order codes

PMAER200 10A 9K 2 3 1

Port size	
8A	G1/4“
10A	G3/8“

Pressure range	
1K	0,005 to 0,1 MPa
5K	0,005 to 0,5 MPa
9K	0,009 to 0,9 MPa

Input signal	
1	current 4-20 mA
2	voltage 0-10 V
3	voltage 0-5 V
4	4 preset points

Output signal	
1	analog, voltage 1-5 V
2	switch, NPN
3	switch, PNP
4	analog, current 4-20 mA
0	for input signal 4

Display unit	
1	MPa

The pressure unit can be changed in the settings. Available options are: MPa, kg/cm², bar, psi, kPa.

Order codes - accessories

Description	Order code
L type bracket	PMAER200-B1
Flat type bracket	PMAER200-B2

Description	Order code
Straight connector, cable 1 m	PMAER200-S1
Straight connector, cable 3 m	PMAER200-S3

Description	Order code
L type connector, cable 1 m	PMAER200-L1
L type connector, cable 3 m	PMAER200-L3

Capacity

Flow rate

Pressure range 1K

Supply pressure 0,2 MPa

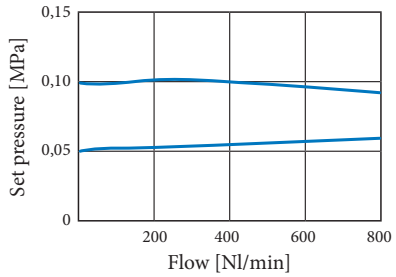

Pressure range 5K

Supply pressure 0,7 MPa

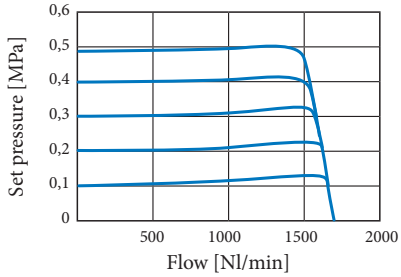

Pressure range 9K

Supply pressure 1,0 MPa

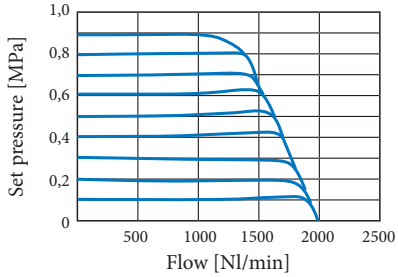

Relief flow rate

Pressure range 1K

Back pressure 0,2 MPa

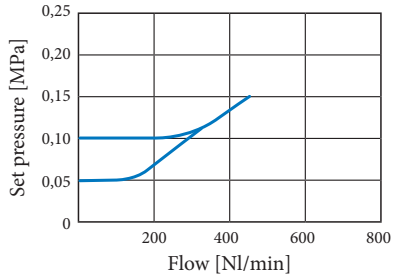

Pressure range 5K

Back pressure 0,7 MPa

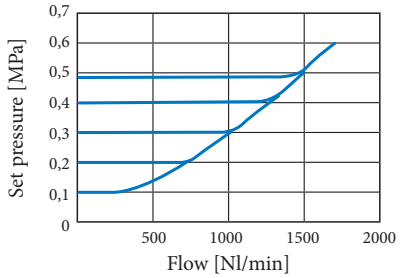

Pressure range 9K

Back pressure 1,0 MPa

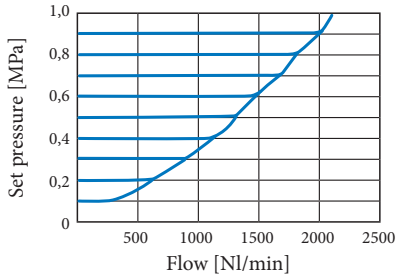

Dimensions

MAER200 with L type bracket

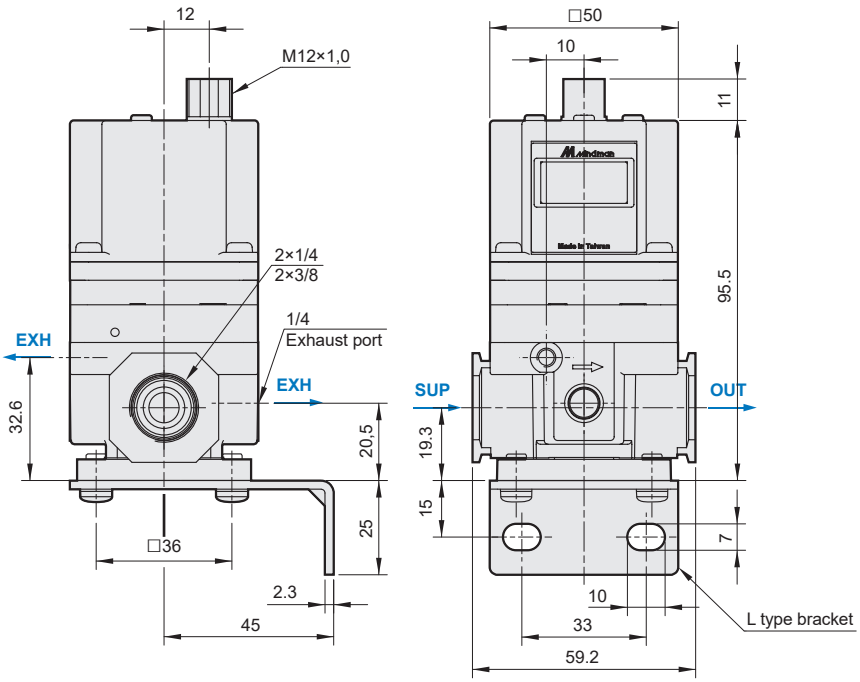

MAER200 with flat type bracket

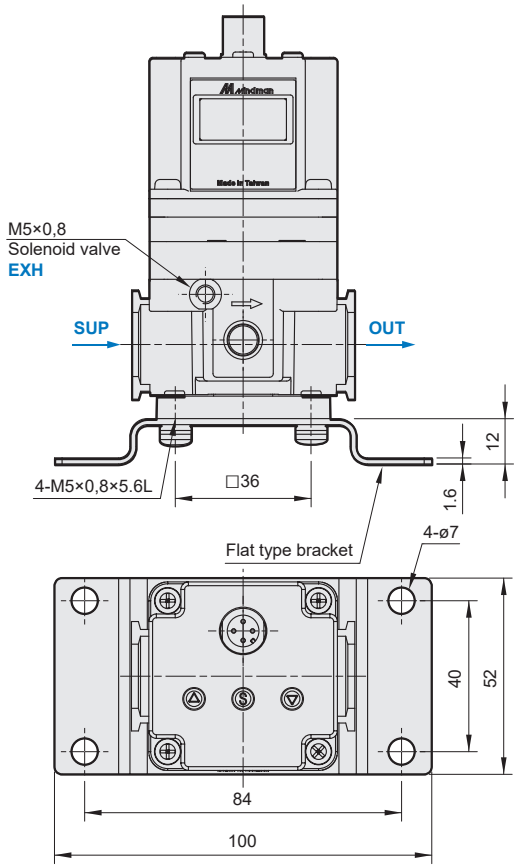

Connectors

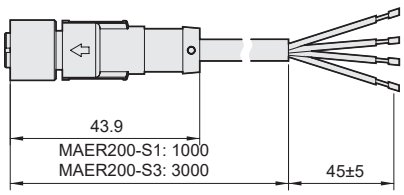

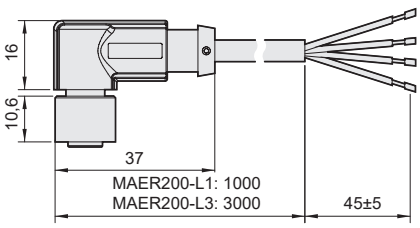

8

ELECTRO-PNEUMATIC REGULATOR SERIES MAER300

STRÁNSKÝ A PETRŽÍK

The electro-pneumatic regulator is used for continuous electronic regulation of the output pressure based on the voltage or current input signal. The outlet pressure can therefore be dynamically adapted to the requirements of the application. The valve is also equipped with an output that can be further processed. High accuracy is achieved thanks to the integrated processor and PID control. The maximum flow at an inlet pressure of 1 MPa and an outlet pressure of 0,6 MPa is up to 4000 Nl/min.

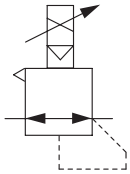

A model controlled by RS-232 / RS-485 with Modbus protocol is also available. For more information, contact the technical department.

Type		MAER300		
Pressure range (see order code)		**1K**	**5K**	**9K**
Port size		in/out: G1/4“, G3/8“, G1/2“, relief: G1/2“, control exhaust: M5		
Medium		modified compressed air		
Test pressure [MPa]		0,3	1,5	1,5
Temperature range [°C]		-5 to +50		
Min. supply pressure [MPa]		set pressure + 0,1		
Max. supply pressure [MPa]		0,2	0,7	1,0
Setting pressure range [MPa]		0,005 to 0,1	0,005 to 0,5	0,009 to 0,9
Supply voltage [V]		24V DC ±10%		
Power consumption [A]		0,08 or less		
Input signal	current type [mA]	DC, 4 to 20, impedance ≤ 400 Ω		
	voltage type [V]	DC, 0 to 5, or 0 to 10, impedance approx. ≤ 50 kΩ		
	preset input	4 points (one point should be set to zero due to safety reasons, combinations of 2 input signals), impedance approx. ≤ 1000 kΩ		
Output signal	analog	DC output current 4 to 20 mA (load impedance 750Ω or less), DC output voltage 1 to 5 V (load impedance 1kΩ or above)		
	switch	PNP or NPN output, max. voltage 24V DC, max. current 160 mA		
Linearity		within ±1% F.S.		
Hysteresis		within 0,5% F.S.		
Repeatability		within ±0,5% F.S.		
Sensitivity		within 0,2% F.S.		
Temperature characteristics		within ±0,2% F.S./°C		
Output pressure display		precision: ±2% F.S., ±1 digit, min. unit: 0,001 (MPa), 0,01 (bar, kg/cm²), 0,1 (psi), 1 (kPa)		
Enclosure		equivalent to IP65		
Weight [kg]		valve: 0,69, bracket: 0,086 (L type), 0,08 (flat type), connector with cable: 0,055 (1m), 0,13 (3m)		

Order codes

PMAER300 10A 9K 2 3 1

Port size	
8A	G1/4“
10A	G3/8“
15A	G1/2“

Pressure range	
1K	0,005 to 0,1 MPa
5K	0,005 to 0,5 MPa
9K	0,009 to 0,9 MPa

Input signal	
1	current 4-20 mA
2	voltage 0-10 V
3	voltage 0-5 V
4	4 preset points

Output signal	
1	analog, voltage 1-5 V
2	switch, NPN
3	switch, PNP
4	analog, current 4-20 mA
0	for input signal 4

Display unit	
1	MPa

The pressure unit can be changed in the settings. Available options are: MPa, kg/cm², bar, psi, kPa.

Order codes - accessories

Description	Order code
L type bracket	PMAER200-B1
Flat type bracket	PMAER200-B2

Description	Order code
Straight connector, cable 1 m	PMAER200-S1
Straight connector, cable 3 m	PMAER200-S3

Description	Order code
L type connector, cable 1 m	PMAER200-L1
L type connector, cable 3 m	PMAER200-L3

Capacity

Flow rate

Pressure range 1K

Supply pressure 0,2 MPa

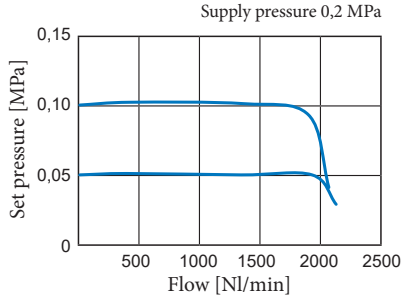

Pressure range 5K

Supply pressure 0,7 MPa

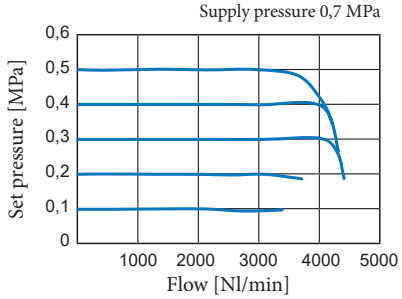

Pressure range 9K

Supply pressure 1,0 MPa

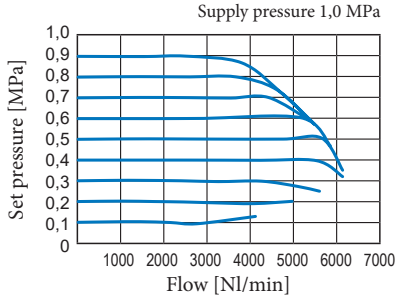

Relief flow rate

Pressure range 1K

Back pressure 0,2 MPa

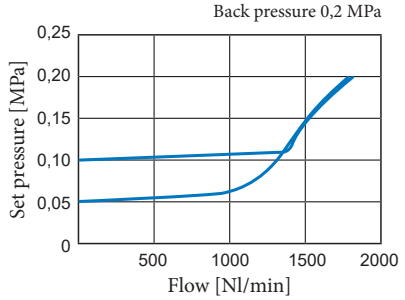

Pressure range 5K

Back pressure 0,7 MPa

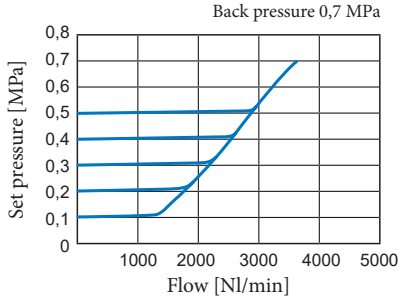

Pressure range 9K

Back pressure 1,0 MPa

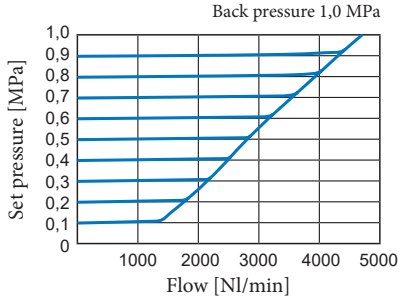

Dimensions

MAER300 with L type bracket

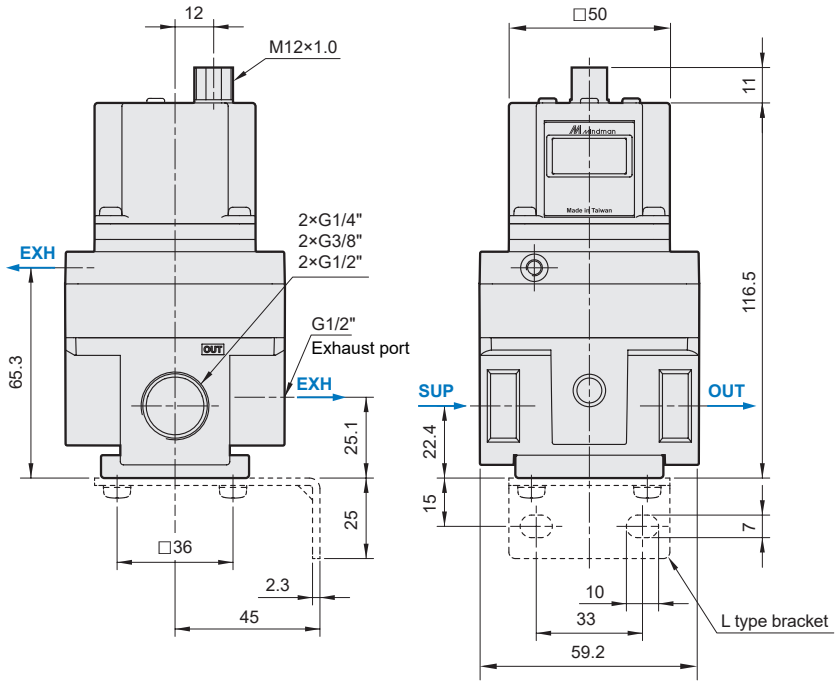

MAER300 with flat type bracket

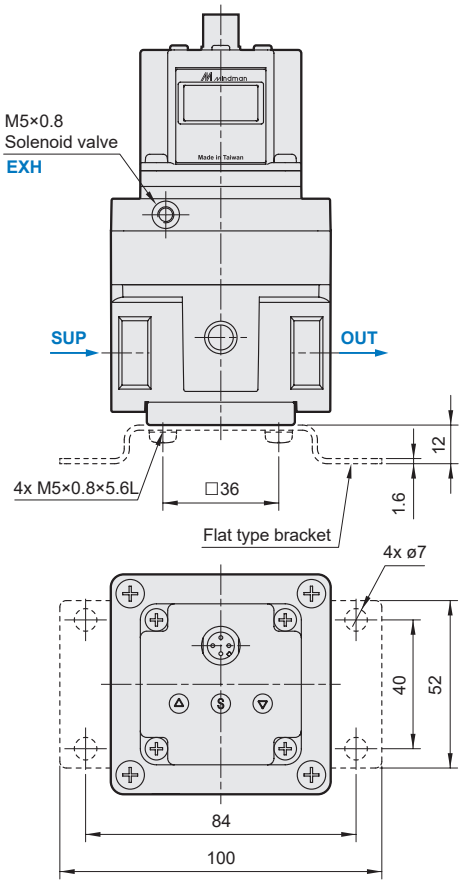

Connectors

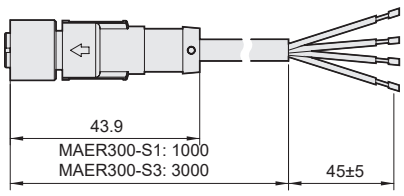

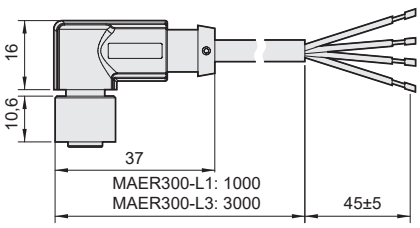

SHUTOFF VALVE
SERIES MVHR302 AND MVHR400

STRÁNSKÝ A PETRŽÍK

Shutoff valve is an easy and inexpensive way to add shutoff capability to an FRL unit. It allows the air supply to be closed and MVHR models can be operated either manually or by a solenoid valve. When the supply is closed, the compressed air is exhausted from the circuit behind the valve. Both positions of the manually operated model can be locked (padlock not included), which will contribute to safety during maintenance or adjustment. The valve is designed to be assembled with other air conditioning elements (using the couplings) or can be used separately. Size 302 is suitable for all elements of the MA**302 series, size 400 is then for MA**401 and MA**403.

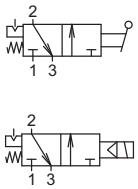

Port size	MVHR302			MVHR400		
	G1/4“	G3/8“	G1/2“	G1/4“	G3/8“	G1/2“
Valve type	3/2 (residual pressure release)					
Pressure range [MPa]	manual type: 0,1 to 1,0, solenoid type: 0,15 to 1,0					
Temperature range [°C]	-5 to +60					
Voltage [V]	24V AC ±10%, 230V AC ±10%, 24V DC ±10%					
Power consumption [W, VA]	6/4.9VA for AC (inrush/hold), 2W for DC voltage					
Weight [kg]	manual type: 0,30, solenoid type: 0,38			manual type: 0,31, solenoid type: 0,38		
Supply contains	without lock, without connection plate, bracket (optional - see order code)					

Order codes

PMVHR 302 S 10A A220 L B

Series	
302	series 302
4	series 401, 403

Control	
	manual type
S	solenoid type

Port size	
8A	G1/4“
10A	G3/8“
15A	G1/2“

Voltage	
	none (manual type)
D24	24 V DC ± 10%
A220	230 V AC ± 10%, 50-60 Hz
A24	24 V AC ± 10%, 50-60 Hz

Connector	
	standard
L	with LED

Note: EEx m II T4 coil is available on request

Accessories	
	without
B	bracket

Valve can be used standalone, or should be attached using connection plate order code PMACP302-C with other units of series 302, or attached using connection plate order code PMACP401-C with other units of series 401.

Dimensions

MVHRx - manual type

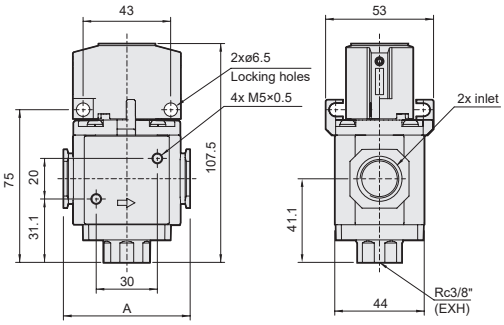

Series	A	B
MVHR302	62.2	80,8
MVHR4	63.9	81.7

MVHRx - bracket dimensions

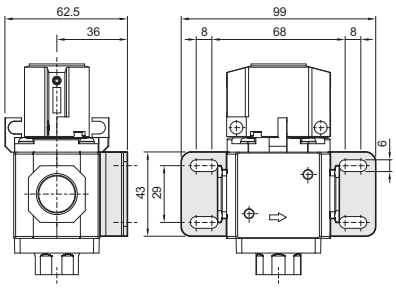

MVHRxS - solenoid type

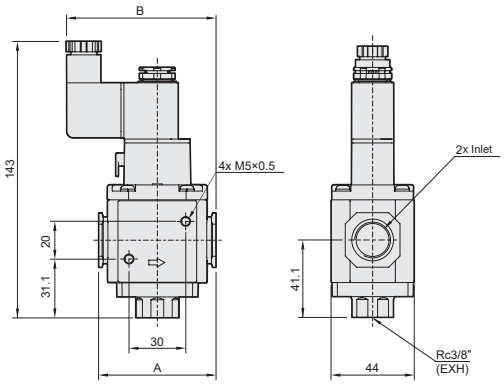

Connection plate for FRL units

Order codes	For series
PMACP302-C	MA*302
PMACP401-C	MA*401

Order codes	For series
PMACP501-C	MA*501

Connection plate is used, for assembling of two or more standalone units of the same series, for example filter and lubricator or filter and coalescing filter.

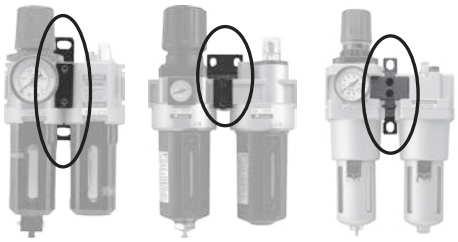

Diverter blocks for FRL units

Order codes	For series	Thread
PMACP302-T8	MACP302	2x G1/4“
PMACP302-T10	MACP302	2x G3/8“
PMACP302-T15	MACP302	2x G1/2“
PMACP401-T8	MACP401	2x G1/4“
PMACP401-T10	MACP401	2x G3/8“

Order codes	For series	Thread
PMACP401-T15	MACP401	2x G1/2“
PMACP501-T8	MACP501	2x G1/4“
PMACP501-T10	MACP501	2x G3/8“
PMACP501-T15	MACP501	2x G1/2“

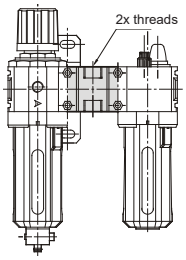

The delivery includes a diverter block and a set of connecting plates for mounting on the relevant element.

Spare bowls

For filters	Order codes	
	with semiautomatic drain	with automatic drain
MACP302, MAF302, MAFR302	PMACP302-S*	PMACP302-D*
MACP401, MAF401, MAFR401	PMACP401-S	PMACP401-D
MACP501, MAF501, MAFR501	PMACP501-S*	PMACP501-D*

For lubricators	Order codes
MACP302, MAL302	PMACP302-L*
MACP401, MAL401	PMACP401-L
MACP501, MAL501	PMACP501-L*

*) Note for 302 and 501 series: mentioned code is for polycarbonate bowl. For nylon bowl add „N“ at the end of the code and for metal bowl add „M“ at the end of the code.

Spare filter elements

For filters	Order codes			
	5 µm	40 µm	0,3 µm	0,01 µm
MACP302, MAF302, MAF203D, MAF302M, MAFR302	PMACP302-FE5	—	PMACP302-FE0,3	PMACP302-FE0,01
MACP401, MAF401, MAFR401	PMACP401-FE5	—	—	—
MAF401, MAF401D, MAF401M	PMACP401-FE5	—	PMACP401-FE0,3	PMACP401-FE0,01
MACP501, MAFR501	—	PMACP501-FE40R	—	—
MAF501, MAF501D, MAF501M	—	PMACP501-FE40	PMACP501-FE0,3	PMACP501-FE0,01

8

Valve with digital condensation removal timer

Valve for automatic condensation removal is used for draining of pressure tank or big filters. Main advantages are enclosure IP65, compact design a digital timer with easy operation.

Order codes

PMBS 03 3N3 A220 T

Thread	
03	G1/8“
06	G1/4“

Voltage	
A220	230 V AC ± 8%, 50-60 Hz

Time adjustment:
- press SET for 2 seconds
- press ADJ to adjust ON time
- press SET
- press ADJ to adjust OFF time seconds
- press SET
- press ADJ to adjust OFF time minutes
- press SET

Note: for manual override press both keys for 2 seconds.

Order code	Thread	Max. pressure [MPa] at 230V AC	Orifice [mm²]	Cv	Time ranges	Power input [VA]	Temperature range [°C]
PMBS 03 ...	G1/8“	0 to 1.6	1.6	0,09	On: 0 to 59 seconds Off: 0 to 99 minutes	8.5 for 230V AC	-15 to +50
PMBS 06 ...	G1/4“	0 to 1.6	1.6	0,09			

Gauges

Type	PPG-20	PPG-40	PPG-50
Scale	MPa	MPa / PSI	MPa/ PSI
Range [kg/cm²]	0 to 10	0 to 10; 0 to 1 0 to 3; 0 to 5	0 to 10 0 to 5
Diameter [mm]	—	40	50
Accuracy	JIS class 4		
Temperature range [°C]	-5 to +60		

PPG-20

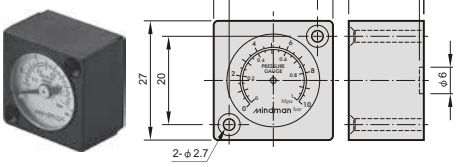

PPG-40

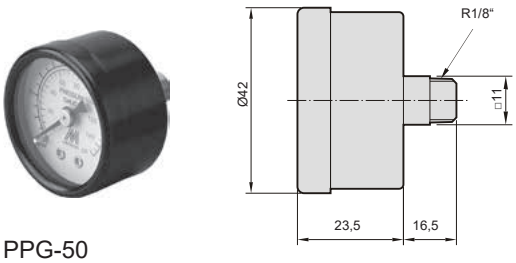

PPG-50

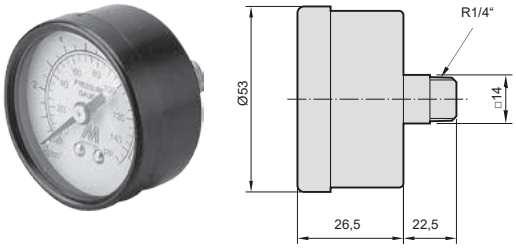

Order codes

PPG – 40 – 5K

Type	
20	PPG-20
40	PPG-40
50	PPG-50

Range	
	0 to 10 (1,0 MPa) (standard)
-1K*	0 to 1 (0,1 MPa)
-3K*	0 to 3 (0,3 MPa)
-5K*	0 to 5 (0,5 MPa)
-20K**	0 to 20 (2.1 MPa)

*) for PPG-40 only
**) for PPG-50 only

Suitable for series	PPG-20	PPG-40	PPG-50
MAR200	×	✓	×
MACP302, MAR302, MAFR302	✓	×*	×
MACP401, MAR401, MAFR401	✓	×*	×
MACP501, MAR501, MAFR501	✓	×*	×

*) Note for series 302, 401 and 501: Gauge with a thread can only be used with a threaded adapter, order code PA-MAR302 (for series 302 and 501) or order code PA-MAR401 (for series 401).

Threaded adapter (for mounting a threaded gauge instead of a built-in square gauge)

Description	Order code
Threaded adapter for series MAx302 and MAx501	PA-MAR302
Threaded adapter for seriesMAx401	PA-MAR401

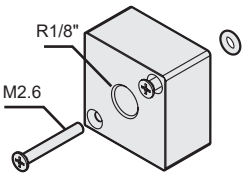

Recommended tightening torque is between 1,5 to 2,5 Nm for the female thread (1/8") and 0,3 to 0,5Nm for the screws (M2.6).

8

Gauges for panel mounting

Order codes	D - diam.	Thread	Range [bar]	A	B	C	E	OK
2980 0000 0600 0003	50	G1/4"	0 to 10	52.5	32.5	5.3	55	14
2980 0000 0600 0004	50	G1/4"	0 to 16	52.5	32.5	5.3	55	14
2980 0000 0600 0005	63	G1/4"	0 to 10	51,5	31.7	5	68	14
2980 0000 0600 0006	63	G1/4"	0 to 16	51,5	31.7	5	68	14

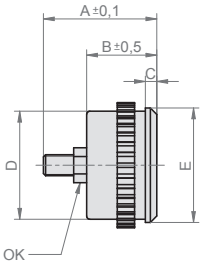

Digital gauges

Description	Order codes
Digital pressure gauge MP23, G1/8“, cable 2m	PMP23P-F3
Digital pressure gauge MP23, G1/8“, 4-pin connector M8x1	PMP23P-F3-QD
Bracket BT-1	PMP25-BT1
Bracket BT-2	PMP25-BT2
Panel mounting adapter with protective cover PA	PMP25-PA

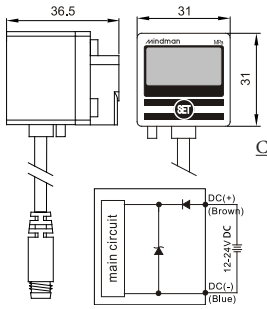

Connector wiring
1-brown (+)
3-blue (-)
2,4-not used

Description	Value
Working medium	air, non-corrosive gases, incombustible gases
Supply voltage [V]	12 to 24, DC (± 10%)
Display	3 1/2 digits, red LED, sampling rate 5x per second
Accuracy at 25 ˚C	≤±2% of full span, ±1 digit
Protection	short circuit-integrated, enclosure IP40
Ambient temp. range [˚C]	0 to +50 (no dew condensation or icing)

Description	Value
Rated pressure range [MPa]	-0,1 to 1,0
Max. pressure [MPa]	1,5
Current consumption [mA]	up to 55
Selectable units	MPa, bar, PSI, kgf/cm²
Ambient humidity [%]	35 to 85
Weight [kg]	0,102

Note:
- See page 3-6 for cables with connector.
- See www.sappv.cz/r/j17e for dimensions of bracket and panel adapter.
- Gauge has 2 inlet ports, bottom and back, plug is attached.

Digital battery pressure gauge

Description	Order code
Digital pressure gauge MPG60, external G1/8“, internal M5	PMPG60PL-F3
Digital pressure gauge MPG60, external G1/4“, internal M5	PMPG60PL-F6
Bracket BT-5	PMP-A5
Bracket BT-6	PMP-A6
Panel mounting adapter with protective cover PA-D	PMP-C2

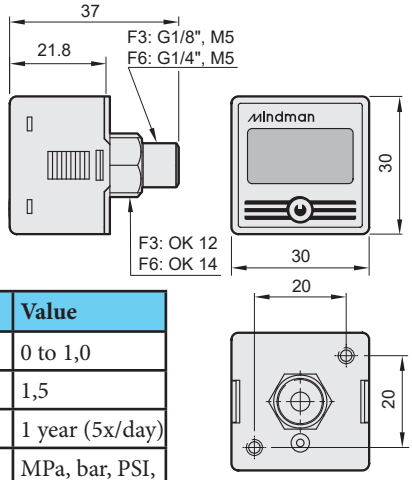

Description	Value
Working medium	air, non-corrosive gases, incombustible gases
Battery	CR2032 lithium, replaceable
Display	3 1/2 digits, LCD, sampling 2x per second, back light
Accuracy at 25 ˚C	≤±2% F. S., ±1 digit
Enclosure	IP65 (air tube must be installed)
Ambient temperature range [˚C]	0 to +50 (no dew condensation or icing)

Description	Value
Rated pressure range [MPa]	0 to 1,0
Max. pressure [MPa]	1,5
Battery life	1 year (5x/day)
Selectable units	MPa, bar, PSI, kgf/cm²
Ambient humidity [%]	35 to 85
Weight [kg]	0,04

The gauge display is off by default. If you want to display the current pressure, just press the button and the measured value will be displayed for 60 seconds. Then the display goes off again.

Bracket BT-5

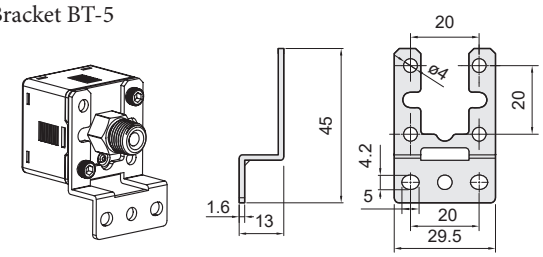

Bracket BT-6

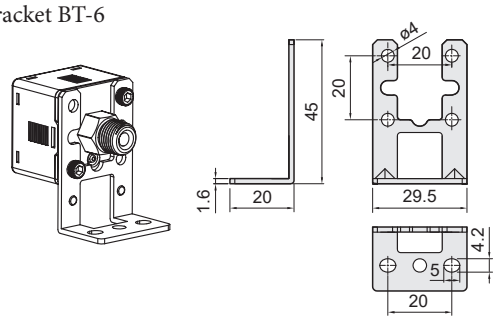

Panel mounting adapter with protective cover PA-D

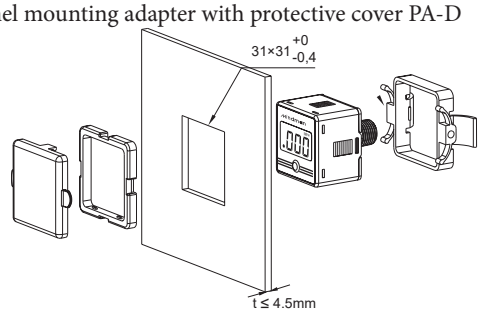

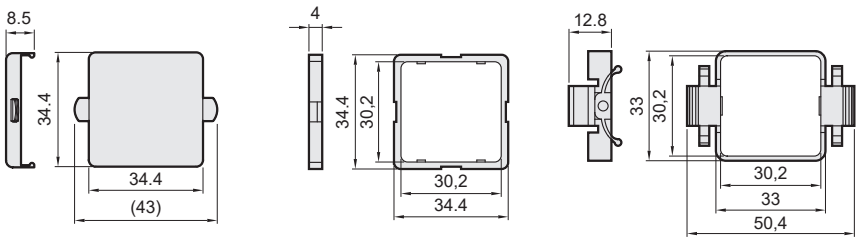

STRÁNSKÝ A PETRŽÍK

Digital pressure switch, type MP45 with threads G1/8“ and M5

Description	Value
Rated pressure range [MPa]	0,00 to 1,00
Thread	G1/8“ external and M5 internal
Max. pressure [MPa]	1,5
Working medium	air, non-corrosive gases, incombustible gases
Supply voltage [V]	12 to 24, DC (± 10%)
Current consumption [mA]	≤40 (no load)
Comparative output	2x PNP/NPN output, current max. 125 mA, voltage max. 24V DC, residual voltage 1,5V
Comparative output indication	orange indicator for both outputs
Analog voltage output	output voltage 1 to 5 V ±2,5%, linearity ±1% F.S., output impedance approx. 1 kΩ
Analog current output	output current 4 to 20 mA ±2.5%, linearity ±1% F.S., load impedance: min. 50 Ω, max. 250 Ω at 12 V, max. 600 Ω at 24 V
Units and resolution	MPa: 0,001, bar/ kgf/cm^2: 0,01, PSI: 0,1
Hysteresis	adjustable, 1 digit or fixed in comparator mode
Repeatability	±0,2% F.S. ±1 digit
Indicator accuracy	±2% F.S. ±1 digit (at 25 ±3 ˚C)
Temperature characteristic	±2.5% F.S. of detected pressure (25 ˚C) at range 0 - 50 ˚C
Response time [ms]	adjustable 2.5 to 1500 in 7 steps
Short circuit protection	integrated
Display	3 ½ digits, 7 segments, red/green, sampling rate 5x per second
Enclosure	IP65
Ambient temperature range [˚C]	0 to +50 (no condensation or freezing), storage: -10 to +60
Ambient humidity [%]	35 to 85
Cable	5-wire, section 0,15 mm^2, length 2m, removable
Weight [kg]	0,086

8

Order codes

PMP45P– 030 –F3

	Output
010	2x NPN + 1 analog output 1-5V
011	2x NPN + 1 analog output 4-20mA
030	2x PNP + 1 analog output 1-5V
031	2x PNP + 1 analogo output 4-20mA

Order codes of accessories

Description	Order codes
Bracket BT-10	PMP-A10
Bracket BT-11	PMP-A11
Panel mounting adapter with protective cover PA-F	PMP-C3

Dimensions

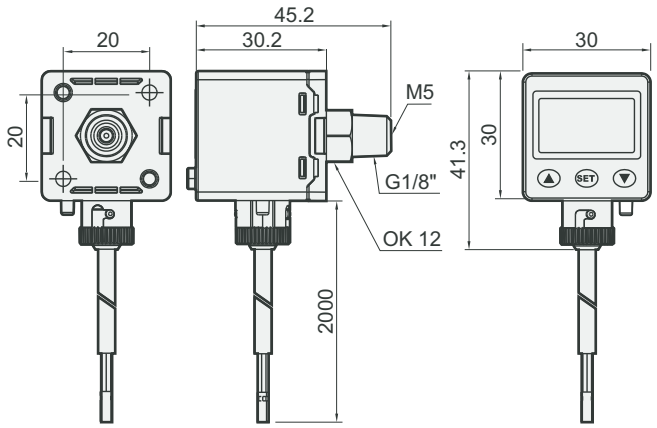

Wiring diagrams

Output 010: 2x NPN + 1 analog output 1-5V

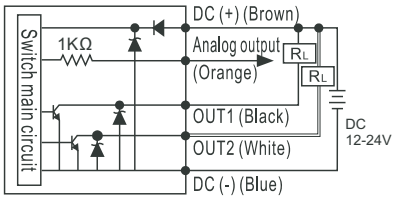

Output 030: 2x PNP + 1 analog output 1-5V

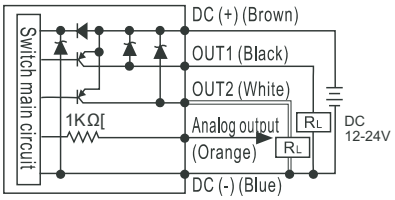

Output 011: 2x NPN + 1 analog output 4-20mA

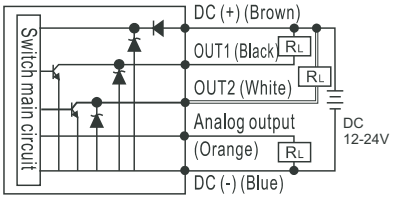

Output 031: 2x PNP + 1 analog output 4-20mA

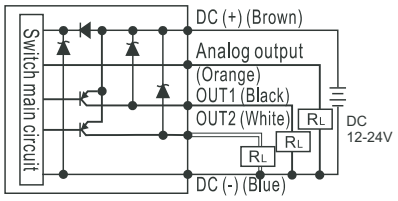

Accessories for digital pressure switch MP45

Bracket BT-10

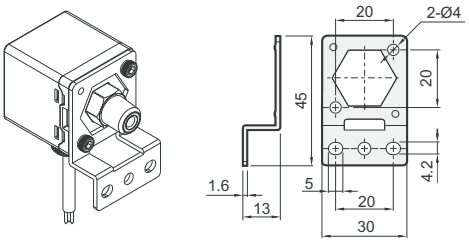

Bracket BT-11

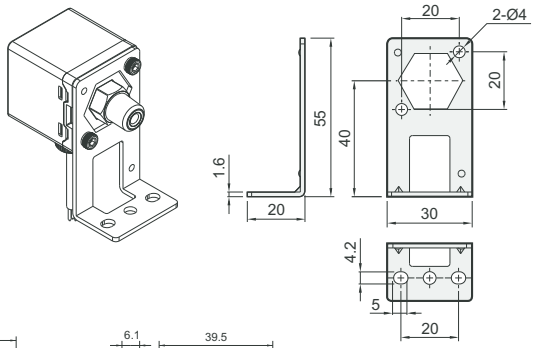

Panel mounting adapter with protective cover PA-F

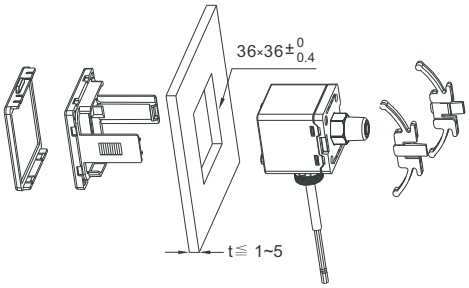

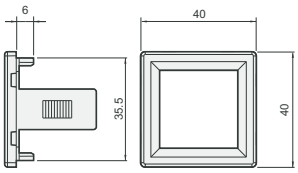

Dimensions of panel mounting adapter without protective cover. It is necessary to create square hole with dimensions 36x36 mm. Max. panel thickness is 5 mm.

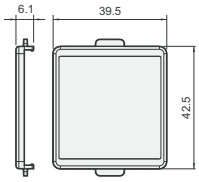

Dimensions of protective cover

8

Electronic pressure switch, type MP10 push-in, or with thread G1/8“

Description	Value
Rated pressure range [MPa]	0,0 to 0,6
Max. pressure [MPa]	1,5
Working medium	air, non-corrosive gases, incombustible gases
Supply voltage [V]	10,8 to 30, DC
Max. load current [mA]	80
Current consumption [mA]	10
Internal voltage drop [V]	0,8
Repeatability	≤±1% of full span
Hysteresis	max. 3% of full span
Response time [ms]	approx. 1
Short circuit protection	integrated
Indicator	red LED
Enclosure	IP40
Cable	3 wires (0,18 mm²), ∅2.6 mm
Ambient temperature range [˚C]	0 to +50 (no dew condensation or icing)
Ambient humidity [%]	35 to 85
Weight [kg]	0,050

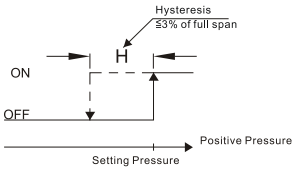

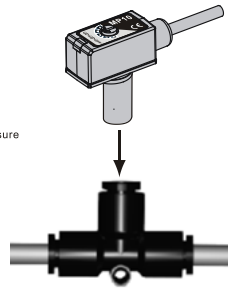

Order codes

PMP10P– 04 – F3 –C

Output	
04	PNP
02	NPN

Connection	
F3	G1/8“ outer / M5 inner
R4	push-in ∅4
R6	push-in ∅6

Wiring	
	cable 3 m
-C	3-pin connector M8x1

8

Dimensions

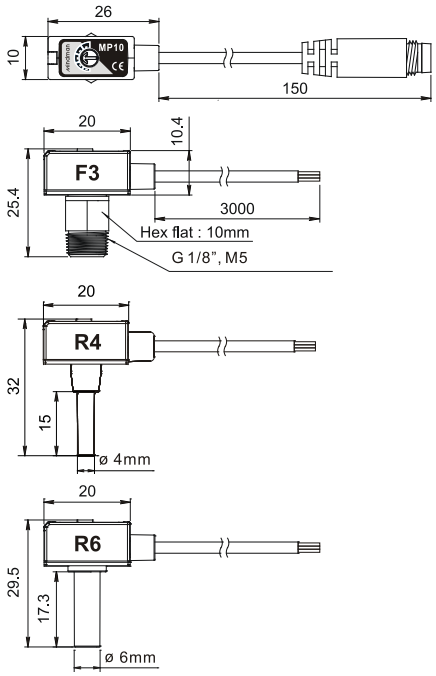

Connection

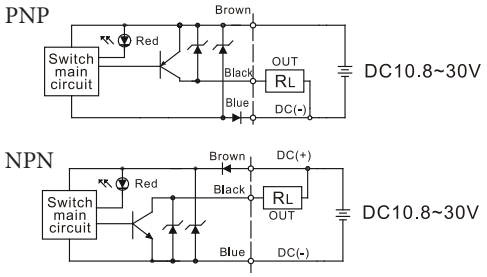

Note:
See page 3-3 for cables with connector

Connector wiring
1-brown (+)
3-blue (-)
4-black (output)

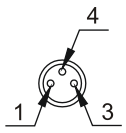

Installation, setting

- When mounting, always use the wrench on the metallic area near the pressure port. Never apply a wrench to the plasticbody, it will damage the sensor
- Use the pressure setting trimmer to set „ON“ pressure. Rotate clockwise to increase pressure setpoint. Rotate counter-clockwise to decrease pressure setpoint

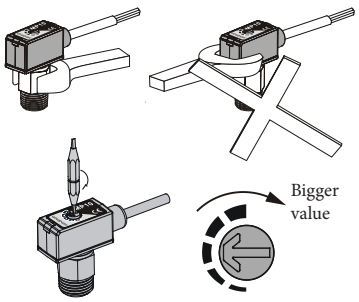

Pressure switch PS31

Description	Value
Housing material	brass (u NPS3120234 passivated steel)
Diaphragm	FKM (Viton®)
Working medium	air, water,mineral hydraulic oil and other
Electric contacts	silver plated
Max. switched voltage [V]	250, 50-60 Hz
Max. switched current [A]	2 for ohmic load, 0,5 for inductive load
Max. fluid temperature [˚C]	120
Anticipated min. cycles	1 million
Enclosure rating	IP00 without connector IP54 resp. IP65 with connector
Weight [kg]	0,07

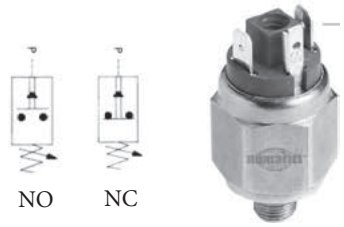

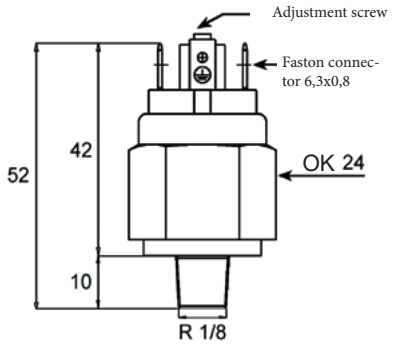

Order codes type NO - normally open	Order codes type NC - normally closed	Thread	Pressure [MPa]	Tolerance at 20˚C [MPa]	Max. static pressure [MPa]
NPS3121231	NPS3111231	R1/8“	0,01 to 0,10	± 0,01	8.0
NPS3121232	NPS3111232	R1/8“	0,1 to 0,5	± 0,03	8.0
NPS3121233	NPS3111233	R1/8“	0,1 to 1.6	± 0,05	8.0
NPS3120234	NPS3110234	R1/8“	2,0 to 5.0	± 0,2	30,0

Connector for switch PS31

Order codes	Enclosure rating
NPCPS3165	IP65

Protection cap for switch PS31

Order codes	Enclosure rating
NPCPS3154	IP54

Pressure switch 27N with hysteresis

Description	Value
Housing material	brass, zinc plated steel for switch with pressure range 1-5 MPa
Diaphragm	FKM
Working medium	air, water
Electric contacts	silver plated
Max. switched voltage [V]	250, 50-60 Hz
Max. switched current [A]	6 for ohmic load, 2 for inductive load
Max. fluid temperature [˚C]	100
Anticipated min. cycles	1 million
Enclosure rating	IP00 without connector, IP65 with connector
Hysteresis	30% of setting value
Weight [kg]	0,13

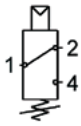

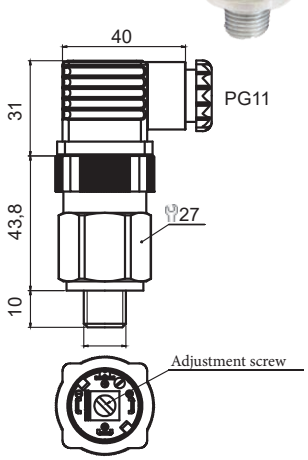

Order codes	Thread	Pressure [MPa]	Tolerance at 20˚C [MPa]	Max. static pressure [MPa]
N27N21121	R1/8“	0,1 to 0,5	± 0,03	8.0
N27N21122	R1/8“	0,1 to 1,0	± 0,05	8.0
N27N20123	R1/8“	1,0 to 5.0	± 0,2	30,0

Supply contains connector.

Pneumatic oil

This oil is used for lubrication of compressed air in pneumatic systems for fail-safe operation. It is specially blended oil with good features such as foamless, no aggression to sealing, balanced viscosity gives you an advantage. Oil is atomized into the compressed air in lubricators.

Temperature range: -20˚C to +80˚C

Order codes	Package volume
2995 0101 0000 0000	1 liter
2995 0105 0000 0000	5 liters

Grease SAP-FML2A for pneumatic components

This grease is used for renovation or creation of permanent fat filling with very long lifetime for using with non-lubricated air. All pneumatic items are greased with this grease by default. Grease has very good water resistance, good stability, excellent mechanical stability and is oxidation resistant.

Temperature range: -30˚C to +120˚C

Order codes	Package content
2995 1004 0000 0000	400 g

Grease for pneumatic components for high temperature usage

This grease is used for renovation or creation of permanent fat filling with very long lifetime for using in high temperatures up to 200°C.

Temperature range: -50˚C to +180 (200)˚C

Order codes	Package content
2995 1101 0000 0000	100 g
2995 1110 0000 0000	1000 g

Grease with PTFE-Teflon for guides

It is plastic grease filled with PTFE-Teflon, which is used for greasing of various sliding and guiding surfaces on stressed places of machines. This grease is not used for greasing of internal parts of pneumatic items. For lubricating of internal parts of pneumatic components please use pneumatic oil or grease for pneumatic components.

Temperature range: -30˚C to +120 (140)˚C

Order codes	Package content
2995 5004 0000 0000	350 g

HYDRAULIC SHOCK ABSORBER - CONTENTS

Hydraulic shock absorber series NC 9-2
M8 to M12

Hydraulic shock absorber series NC 9-3
M14 to M24

Hydraulic shock absorber series NC 9-4
M32 and M45

Hydraulic shock absorber series NC 9-5
M62

Accessories for hydraulic shock absorders series NC 9-6
nut, flange, adapter for side forces, bellow, stop limit nut

Hydraulic speed control series NU 9-7
stroke 13 to 150

For hydraulic shock absorber size selection (calculation), see page i-12.

9

HYDRAULIC SHOCK ABSORBER SERIES NC - M8 TO M12

STRÁNSKÝ A PETRŽÍK

Series	NC-E	NC-S	NC-P
Type	adjustable	self-compensating	self-compensating
Characteristics	linear	linear	progressive
Impact speed [ms^{-1}]	0.2 to 3.5	0.2 to 5.0	0.2 to 5.0
Temperature range [°C]	-20 to +80		

Type	0,1	0,15	0,2
Spring return force [N]	2.5 to 6	3.6 to 8	3.5 to 7
Weight [kg]	0.01	0.02	0.04
Max. tightening torque [Nm]	2	6	10

Order codes

Order code consist of **series description, type** (1. part - see table) and **hardness selection** (2. part - see table), eventually indication of shock absorber with stop cap. If you need the shock absorber with stop cap, add **„-A“** after complete order code. The stop cap couldn‘t be mounted additionally as accessories, because by mounting of stop cap the stroke of shock absorber will be smaller. That is why the stop cap must be ordered together with shock absorber to ensure that piston rod will be extended for stop cap.
Example 1: self-compensating progressive shock absorber M10x1 type 0,15 with hardness 3 has order code NC-P0,15-3
Example 2: adjustable shock absorber M12x1 type 0,2 with stop cap has order code NC-E0,2-1-A

Order code (1. part)	Thread	Stroke	Energy absorption			Effective mass - hardness / order code (2. part)			
			constant load[Nm/stroke]	emergency load [Nm/stroke]	total energy [Nm/hod]	...-1 (soft)	...-2 (medium)	...-3 (hard)	...-4 (very hard)
NC-E0,1-...	M8x1	7	4	6	14 000	0.65 to 50	—	—	—
NC-S0,1-...	M8x1	7	4	6	14 400	0.65 to 2	1.3 to 5.5	1.7 to 50	—
NC-P0,1-...	M8x1	7	4	6	14 400	0.3 to 0.9	0.65 to 2.0	1.8 to 8	—
NC-E0,15-...	M10x1	10	15	22.5	24 000	1 to 500	—	—	—
NC-S0,15-...	M10x1	10	15	22.5	24 000	1.6 to 7.5	6.1 to 71	61 to 252	232 to 750
NC-P0,15-...	M10x1	10	15	22.5	24 000	1 to 2.2	2 to 7.5	6.1 to 71	—
NC-E0,2-...	M12x1	12	22	33	35 200	9 to 800	—	—	—
NC-P0,2-...	M12x1	12	22	33	35 200	2 to 11	10 to 107	104 to 360	343 to 1100
NC-S0,2-...	M12x1	12	22	33	35 200	1.5 to 2.8	2 to 21	17 to 92	—

9

Dimensions

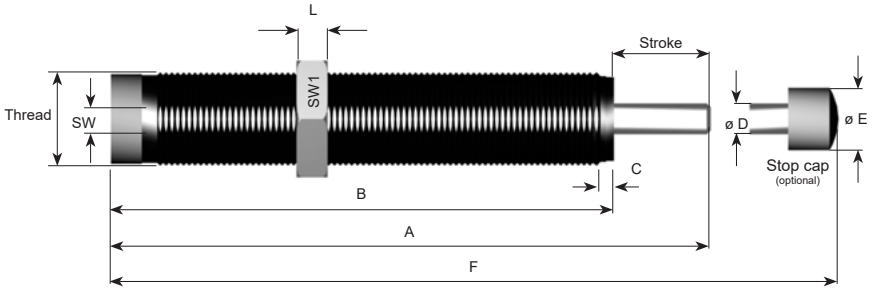

Type	Thread	A	A1	B	C	D	E	F	F1	K	L	SW	SW1
0,1	M8x1	51	56	44	2.5	2.5	6	57	61.5	3.5	3	3	11
0,15	M10x1	59.5	62	49.5	2.5	3	6	66	68.5	3.5	3	3	13
0,2	M12x1	77	81.5	65	2.5	4	10	85	89.5	3.5	4	3	14

Series	NC-E	NC-S	NC-P
Type	adjustable	self-compensating	self-compensating
Characteristics	linear	linear	progressive
Impact speed [ms^{-1}]	0.08 to 6.0	0.08 to 6.0	0.3 to 8.0
Temperature range [°C]	-20 to +80		

Type	0,25	0,35	0,5x19	1,0	1,0x40
Spring return force [N]	13 to 23	13 to 23	12 to 23	15 to 31	11 to 20
Weight [kg]	0.05	0.07	0.14	0.29	0.39
Max. tightening torque [Nm]	20	20	25	30	30

Order codes

Order code consist of **series description, type** (1. part - see table) and **hardness selection** (2. part - see table), eventually indication of shock absorber with stop cap. If you need the shock absorber with stop cap, add **„-A“** after complete order code. The stop cap couldn't be mounted additionally as accessories, because by mounting of stop cap the stroke of shock absorber will be smaller. That is why the stop cap must be ordered together with shock absorber to ensure that piston rod will be extended for stop cap.
Example 1: self-compensating progressive shock absorber M16x1.5 type 0,35 with hardness 3 has order code NC-P0,35-3
Example 2: adjustable shock absorber M14x1 type 0,25 with stop cap has order code NC-E0,25-1-A

Order code (1. part)	Thread	Stroke	Energy absorption			Effective mass - hardness / order code (2. part)				
			constant load[Nm/stroke]	emergency load [Nm/stroke]	total energy [Nm/hod]	...-0 (very soft)	...-1 (soft)	...-2 (medium)	...-3 (hard)	...-4 (very hard)
NC-E0,25-...	M14x1	14	30	48	50 000	—	1.6 to 1500	—	—	—
NC-S0,25-...	M14x1	14	30	48	50 000	0.9 to 8	3.5 to 17	9.9 to 76	62 to 252	250 to 950
NC-P0,25-...	M14x1	14	30	48	50 000	—	0.8 to 3.7	3 to 26	21 to 165	—
NC-E0,35-...	M16x1	14	35	50	52 500	—	6.5 to 1750	—	—	—
NC-S0,35-...	M16x1	14	35	50	52 500	1.9 to 4.5	4 to 25	22 to 90	85 to 428	420 to 1320
NC-P0,35-...	M16x1	14	35	50	52 500	—	1.1 to 6.4	5 to 28	25 to 280	—
NC-E0,5x19-...	M20x1	19	100	160	76 500	—	9 to 4500	—	—	—
NC-S0,5x19-...	M20x1	19	100	160	76 500	2.6 to 10.6	10 to 86	40 to 209	170 to 800	680 to 4050
NC-P0,5x19-...	M20x1	19	100	160	76 500	—	2.6 to 12.5	10 to 89	69 to 555	—
NC-E1,0-...	M24x1.5	25	220	352	105 600	—	22 to 11000	—	—	—
NC-S1,0-...	M24x1.5	25	220	352	105 600	6 to 29	24 to 120	70 to 460	440 to 2050	1760 to 10800
NC-P1,0-...	M24x1.5	25	220	352	105 600	—	6 to 27.5	21 to 195	150 to 1200	—
NC-E1,0x40-...	M24x1.5	40	390	624	175 600	—	38 to 18000	—	—	—
NC-S1,0x40-...	M24x1.5	40	390	624	175 600	15 to 103	44 to 216	135 to 962	780 to 3600	3100 to 19500
NC-P1,0x40-...	M24x1.5	40	390	624	175 600	—	10 to 48	39 to 340	270 to 2150	—

9

Dimensions

Series NC-S, NC-P

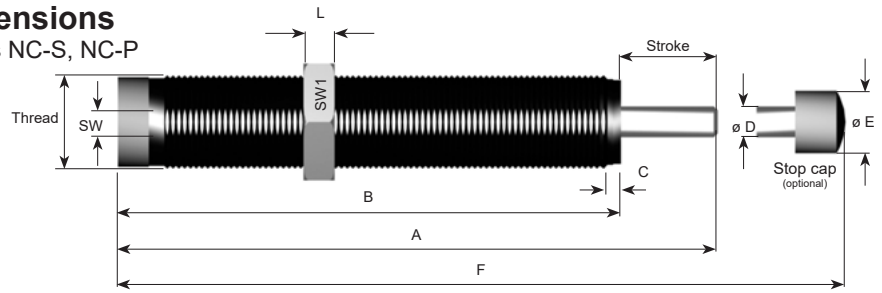

Series NC-E

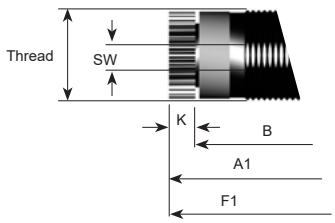

Type	Thread	A	A1	B	C	D	E	F	F1	K	L	SW	SW1
0,25	M14x1	92	97	78	2.5	4	10	100	105	4.5	5	13	17
0,35	M16x1	92	97	78	2.5	4	10	100	105	4.5	6	14	19
0,5x19	M20x1	107	113	88	2.5	6	12	117	123	6	6	18	24
1,0	M24x1.5	133	141	108	3.5	8	16	146	154	8	8	23	30
1,0x40	M24x1.5	170	178	130	3.5	8	16	183	191	8	8	23	30

HYDRAULIC SHOCK ABSORBER
SERIES NC - M32 A M45

STRÁNSKÝ A PETRŽÍK

Series	NC-E	NC-S	NC-P
Type	adjustable	self-compensating	self-compensating
Characteristics	linear	linear	progressive
Impact speed [ms^{-1}]	0.02 to 6.0	0.1 to 6.0	0.4 to 8.0
Temperature range [°C]	-20 to +80		

Type	1,25x1	1,25x2	1,5x1	1,5x2	1,5x3
Spring return force [N]	30 to 50	23 to 50	50 to 70	35 to 70	35 to 80
Weight [kg]	0.45	0.55	0.95	1.1	1.2
Max. tightening torque [Nm]	40	40	40	40	40

Order codes

Order code consist of series **description, type** (1. part - see table) and **hardness selection** (2. part - see table), eventually indication of shock absorber with stop cap. If you need the shock absorber with stop cap, add **„-A“** after complete order code. The stop cap couldn‘t be mounted additionally as accessories, because by mounting of stop cap the stroke of shock absorber will be smaller. That is why the stop cap must be ordered together with shock absorber to ensure that piston rod will be extended for stop cap.
Example 1: self-compensating progressive shock absorber M45x2 type 1,5x2 with hardness 3 has order code NC-P1,5x2-3
Example 2: adjustable shock absorber M32x1.5 type 1,25x1 with stop cap has order code NC-E1,25x1-1-A

Order code (1. part)	Thread	Stroke	Energy absorption			Effective mass - hardness / order code (2. part)				
			constant load[Nm/stroke]	emergency load [Nm/stroke]	total energy [Nm/hod]	...-0 (very soft)	...-1 (soft)	...-2 (medium)	...-3 (hard)	...-4 (very hard)
NC-E1,25x1-...	M32x1.5	25	300	480	120 000	10 to 100	60 to 2950	600 to 89000	—	—
NC-S1,25x1-...	M32x1.5	25	300	480	120 000	7 to 32	28 to 130	80 to 590	440 to 2050	2000 to 12500
NC-P1,25x1-...	M32x1.5	25	300	480	120 000	—	7 to 35	30 to 260	207 to 1650	—
NC-E1,25x2-...	M32x1.5	50	500	800	150 000	15 to 160	100 to 4000	800 to 120000	—	—
NC-S1,25x2-...	M32x1.5	50	500	800	150 000	13 to 60	56 to 240	160 to 1200	1000 to 4200	4000 to 25000
NC-P1,25x2-...	M32x1.5	50	500	800	150 000	—	7 to 35	30 to 260	207 to 1650	—
NC-E1,5x1-...	M45x2	25	870	1400	261 000	30 to 250	150 to 21000	6200 to 240000	—	—
NC-S1,5x1-...	M45x2	25	870	1400	261 000	24 to 114	98 to 480	280 to 2100	1740 to 8200	6960 to 43500
NC-P1,5x1-...	M45x2	25	870	1400	261 000	—	24 to 108	85 to 770	600 to 4800	—
NC-E1,5x2-...	M45x2	50	1 350	2160	340 000	45 to 430	300 to 26000	10800 to 330000	—	—
NC-S1,5x2-...	M45x2	50	1 350	2160	340 000	35 to 170	160 to 680	440 to 2900	2700 to 12700	10800 to 67500
NC-P1,5x2-...	M45x2	50	1 350	2160	340 000	—	37 to 160	130 to 1200	940 to 7500	—
NC-E1,5x3-...	M45x2	75	2 100	3360	420 000	70 to 670	450 to 27600	16800 to 500000	—	—
NC-S1,5x3-...	M45x2	75	2 100	3360	420 000	40 to 270	240 to 1100	670 to 5000	4200 to 19500	16800 to 105000
NC-P1,5x3-...	M45x2	75	2 100	3360	420 000	—	58 to 260	200 to 1850	1450 to 11600	—

9

Dimensions

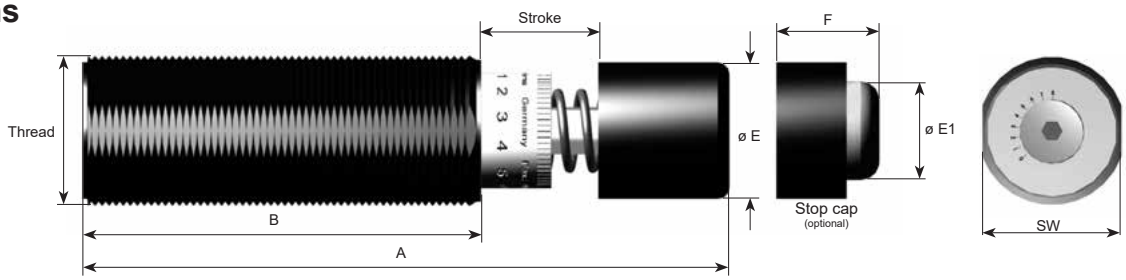

Type	Thread	A	B	E	E1	F	SW
1,25x1	M32x1.5	138	85	29	21	16	30
1,25x2	M32x1.5	188	110	29	21	16	30
1,5x1	M45x2	148	89	39.6	31	18	41
1,5x2	M45x2	198	114	39.6	31	18	41
1,5x3	M45x2	248	139	39.6	31	18	41

Series	NC-E	NC-S	NC-P
Type	adjustable	self-compensating	self-compensating
Characteristics	linear	linear	progressive
Impact speed [ms^{-1}]	0.02 to 6.0	0.1 to 6.0	0.4 to 8.0
Temperature range [°C]	-20 to +80		

Type	2,0x1	2,0x2	2,0x4	2,0x6
Spring return force [N]	50 to 130	40 to 130	45 to 130	35 to 130
Weight [kg]	2.0	3.0	3.9	4.8
Max. tightening torque [Nm]	40	40	40	40

Order codes

Order code consist of **series description, type** (1. part - see table) and **hardness selection** (2. part - see table), eventually indication of shock absorber with stop cap. If you need the shock absorber with stop cap, add **„-A“** after complete order code. The stop cap couldn't be mounted additionally as accessories, because by mounting of stop cap the stroke of shock absorber will be smaller. That is why the stop cap must be ordered together with shock absorber to ensure that piston rod will be extended for stop cap.
Example 1: self-compensating progressive shock absorber M62x2 type 2,0x2 with hardness 3 has order code NC-P2,0x2-3
Example 2: adjustable shock absorber M62x2 type 2,0x1 with stop cap has order code NC-E2,0x1-1-A

Order code (1. part)	Thread	Stroke	Energy absorption			Effective mass - hardness / order code (2. part)				
			constant load[Nm/stroke]	emergency load [Nm/stroke]	total energy [Nm/hod]	...-0 (very soft)	...-1 (soft)	...-2 (medium)	...-3 (hard)	...-4 (very hard)
NC-E2,0x1-...	M62x2	25	1 500	2 400	150 000	60 to 480	300 to 41150	12000 to 470000	—	—
NC-S2,0x1-...	M62x2	25	1 500	2 400	150 000	31 to 197	170 to 830	480 to 3700	3000 to 14100	12000 to 75000
NC-P2,0x1-...	M62x2	25	1 500	2 400	150 000	—	31 to 187	150 to 1330	1030 to 8300	—
NC-E2,0x2-...	M62x2	50	2 500	4 000	250 000	80 to 800	500 to 63700	14000 to 600000	—	—
NC-S2,0x2-...	M62x2	50	2 500	4 000	250 000	52 to 330	280 to 1385	800 to 6150	5000 to 23500	20000 to 125000
NC-P2,0x2-...	M62x2	50	2 500	4 000	250 000	—	52 to 310	250 to 2200	1730 to 13800	
NC-E2,0x4-...	M62x2	100	5 000	8 000	350 000	160 to 1600	1000 to 62500	40000 to 1000000	—	—
NC-S2,0x4-...	M62x2	100	5 000	8 000	350 000	104 to 650	565 to 2770	1600 to 12350	10000 to 47200	40000 to 250000
NC-P2,0x4-...	M62x2	100	5 000	8 000	350 000	—	100 to 625	490 to 4400	3460 to 27700	—
NC-E2,0x6-...	M62x2	150	8 000	12 800	400 000	250 to 2400	1250 to 105000	64000 to 1000000	—	—
NC-S2,0x6-...	M62x2	150	8 000	12 800	400 000	160 to 1050	905 to 4430	2560 to 19750	16000 to 75500	64000 to 400000
NC-P2,0x6-...	M62x2	150	8 000	12 800	400 000	—	160 to 1000	790 to 7100	5530 to 44000	—

9

Dimensions

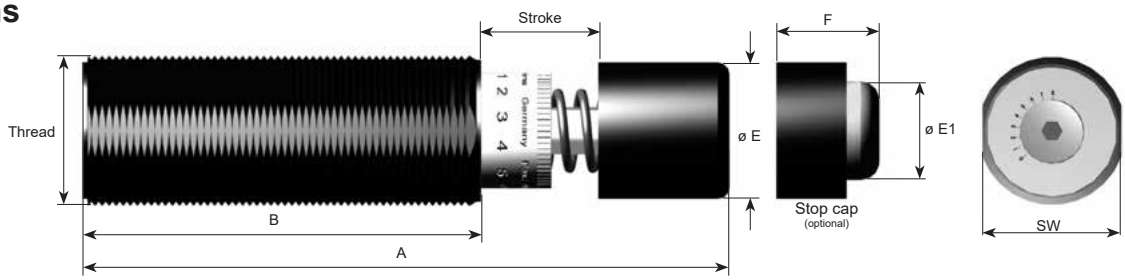

Type	Thread	A	B	E	E1	F	SW
2,0x1	M62x2	186	104	59	49	25	60
2,0x2	M62x2	236	129	59	49	25	60
2,0x4	M62x2	336	179	59	49	25	60
2,0x6	M62x2	453	246	59	49	25	60

STRÁNSKÝ A PETRŽÍK

Nut for series NC M8 to M62

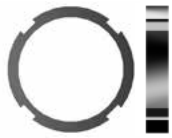

Thread	Order codes	Thread	Order codes	Thread	Order codes	Thread	Order codes	Thread	Order codes
M8x1	NU-14012	M12x1	NU-17012	M16x1	NU-22152	M24x1.5	NU-21232	M45x2	NU-S24012
M10x1	NU-15012	M14x1	NU-21052	M20x1	NU-21152	M32x1.5	NU-S23012	M62x2	NU-S25012

Rectangular flange for series NC M10 to M24

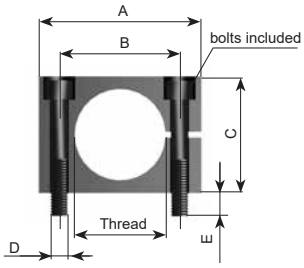

Order codes	Thread	A	B	C	D	E	Width
NU-15013	M10x1	38	25.4	25	4.5	—	12
NU-17013	M12x1	38	25.4	25	4.5	—	12
NU-S21053	M14x1	32	20	20	M5	5	12
NU-S22153	M16x1	40	28	25	M6	6	20
NU-S21153	M20x1	40	28	25	M6	6	20
NU-S21233	M24x1.5	46	33	32	M6	6	25

Square flange for series NC M32 to M62

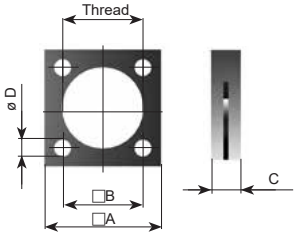

Order codes	Thread	A	B	C	D
NU-S23014	M32x1.5	45	31	12	6,6
NU-S24014	M45x2	55	43	12	9
NU-S25014	M62x2	80	60	20	11

Bellow for series NC M32 to M62

Order codes	Thread	A
NU-S23117	M32x1.5	65
NU-S24117	M45x2	80
NU-S25117	M62x2	90

Adapter for side forces for series NC M10 to M24

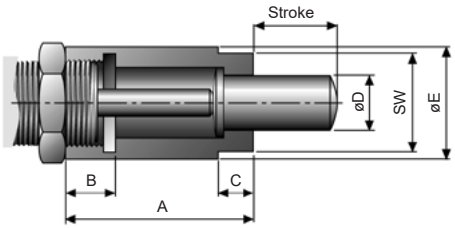

Order codes	Thread	A	B	C	D	E	SW
NU-15319	M10x1	20.5	7	5	7	14	13
NU-17019	M12x1	23	7	5	9	15	14
NU-S21019	M14x1	32	10	6	9	18	15
NU-S22119	M16x1	33	10	5	12	20	17
NU-S21119	M20x1	42	16	8	12	24	22
NU-S21219	M24x1.5	53.5	14.5	10	16	29	27

Stop limit nut for series NC M8 to M62

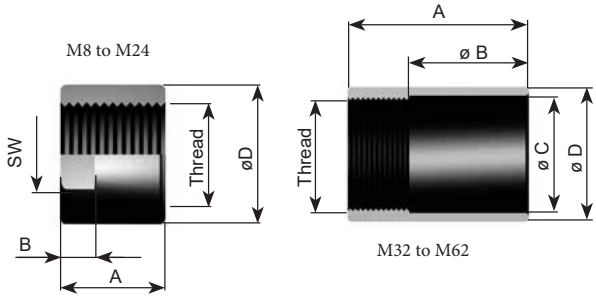

Order codes	Thread	A	B	C	D	SW
NU-14018	M8x1	12	—	—	11	—
NU-15018	M10x1	15	—	—	14	—
NU-17018	M12x1	20	—	—	16	—
NU-21058	M14x1	20	6	—	18	15
NU-22158	M16x1	25	8	—	21	19
NU-21158	M20x1	35	8	—	25	22
NU-21238	M24x1.5	38	10	—	31	30
NU-S23018	M32x1.5	60	35	33	38	—
NU-S24018	M45x2	65	35	47	54	—
NU-S25018	M62x2	100	60	65	74	—

Hydraulic speed control is suitable for applications, where constant speed of feed is necessary, e.g. for feed during drilling, where feed speed balances due to variable material resistance when pneumatic cylinder is used only. The advantage is continual speed setting and maintanance-free operation.

Series	NU-V
Speed range [m/min]	0.015 to 15 or 12 to 40, continual speed setting
Temperature range [°C]	-20 to +80

Order codes

Order code consist of **series description, type** (1. part - see table) and **speed range** (2. part - see table), eventually indication of speed control with stop cap. If you need the speed control with stop cap, add **„-A“** after complete order code. The stop cap couldn't be mounted additionally as accessories, because by mounting of stop cap the stroke of speed control will be smaller. That is why the stop cap must be ordered together with speed control to ensure that piston rod will be extended for stop cap.
Example: speed control for speed range 0.015 to 15 with stroke 100 mm has order code NU-V50-2

Order codes (1. part)	Stroke	External force		Speed range - order codes (2. part)		Spring return force [N]	Weight [kg]
		min [N]	max [N]	...-1 [m/min]	...-2 [m/min]		
NU-V10-...	13	25	3700	12 to 40	0.015 to 15	12 to 28	0.35
NU-V20-...	25	25	3700	12 to 40	0.015 to 15	12 to 28	0.45
NU-V30-...	50	35	3700	12 to 40	0.015 to 15	15 to 32	0.55
NU-V40-...	75	45	3700	12 to 40	0.015 to 15	15 to 32	0.65
NU-V50-...	100	45	3700	12 to 40	0.015 to 15	15 to 32	0.80
NU-V60-...	125	45	3700	12 to 40	0.015 to 15	16 to 40	0.97
NU-V70-...	150	45	3700	12 to 40	0.015 to 15	16 to 40	1.05

Accessories	NU-V10 to NU-V30	NU-V40 to NU-V70
Rectangular flange	NU-82013	NU-82043

Dimensions

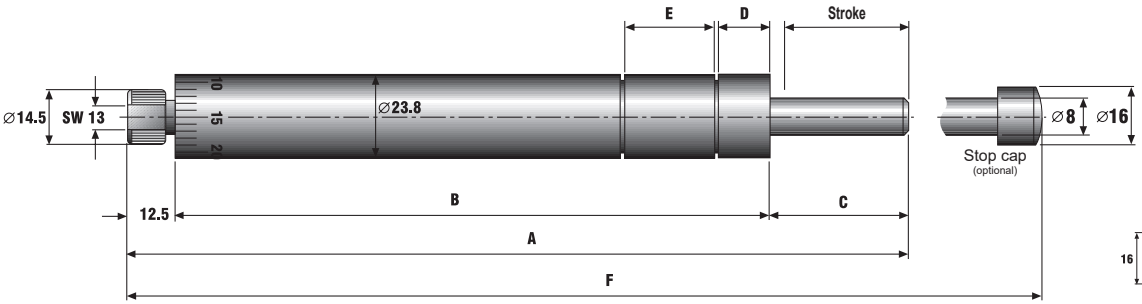

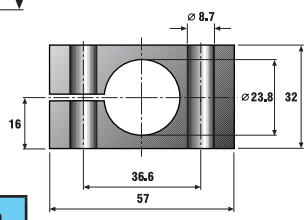

Rectangular flange
(optional)

Order code	Stroke	A	B	C	D	E	F	Flange width
NU-V10-...	13	161	128	21	21.5	25.4	166	32
NU-V20-...	25	202	157	33	19.1	25.4	207	32
NU-V30-...	50	278	208	58	14.6	25.4	283	32
NU-V40-...	75	351	256	83	14.6	25.4	356	50
NU-V50-...	100	417	298	106	14.6	25.4	422	50
NU-V60-...	125	524	381	131	14.6	25.4	529	50
NU-V70-...	150	584	415	156	14.6	25.4	589	50

FITTINGS, TUBES AND ACCESSORIES - CONTENTS

Push-in fittings - nickel plated brass 10-2

Push-in fittings - plastic 10-4

Push-in fittings - stainless steel 10-6

Push-on fittings - nickel plated brass 10-7

Tube sockets 10-8

Sealing rings 10-8

Threaded accessories 10-9

Distribution blocks 10-10

Blow gun 10-10

Silencers 10-11

Accessories for tube 10-11

Tubes 10-12

Protecting metal hoses 10-14

Rotary couplings 10-14

Quick couplings 10-15

Distribution system Quick Line 10-17

PUSH-IN FITTINGS - NICKEL PLATED BRASS

STRÁNSKÝ A PETRŽÍK

Technical data:
Max. pressure: vacuum to 1.8 MPa
Temperature range: -20°C to +80°C
Materials: body, bush - nickel plated brass, release sleeve - POM, clamping ring - stainless steel, seals - NBR (nylon sealing rings for banjo bolt)
Medium: air, liquids and gases according to compatibility with fitting and tube materials
Suitable for tubes: PA6, PA11, PU, PE, PTFE
When inserting PU and PTFE tubes it is recommended to press release sleeve to protect tube before scratching and possible inner sealing ring damage.

Straight incl. sealing ring

∅ mm	Thread	Order codes
4	M5	N104-004-005
4	G1/8“	N102-004-000
4	G1/4“	N102-004-001
6	M5	N104-006-005
6	G1/8“	N102-006-000
6	G1/4“	N102-006-001
8	G1/8“	N102-008-000
8	G1/4“	N102-008-001
8	G3/8“	N102-008-002
10	G1/4“	N102-010-001
10	G3/8“	N102-010-002
10	G1/2“	N102-010-003
12	G1/4“	N102-012-001
12	G3/8“	N102-012-002
12	G1/2“	N102-012-003
16	G1/2“	N102-016-003

Straight with internal thread

∅ mm	Thread	Order codes
4	M5	N105-004-005
4	G1/8“	N105-004-000
6	G1/8“	N105-006-000
6	G1/4“	N105-006-001
8	G1/8“	N105-008-000
8	G1/4“	N105-008-001
10	G1/4“	N105-010-001
10	G3/8“	N105-010-002
12	G1/4“	N105-012-001
12	G3/8“	N105-012-002
12	G1/2“	N105-012-003

Bulkhead fitting

∅ mm	Thread	Order codes
4	M11	N101-004-000
6	M13	N101-006-000
8	M16	N101-008-000
10	M19	N101-010-000
12	M22	N101-012-000
16	M28x1.5	N101-016-000

Swivel elbow incl. sealing ring

∅ mm	Thread	Order codes
4	M5	N108-004-005
4	G1/8“	N108-004-000
4	G1/4“	N108-004-001
6	M5	N108-006-005
6	G1/8“	N108-006-000
6	G1/4“	N108-006-001
8	G1/8“	N108-008-000
8	G1/4“	N108-008-001
8	G3/8“	N108-008-002
8	G1/2“	N108-008-003*
10	G1/8“	N108-010-000
10	G1/4“	N108-010-001
10	G3/8“	N108-010-002
10	G1/2“	N108-010-003
12	G1/4“	N108-012-001
12	G3/8“	N108-012-002
12	G1/2“	N108-012-003
16	G1/2“	N108-016-003

Long swivel elbow incl. sealing ring

∅ mm	Thread	Order codes
4	G1/8“	N108E-004-000
4	G1/4“	N108E-004-001
6	G1/8“	N108E-006-000
6	G1/4“	N108E-006-001
8	G1/8“	N108E-008-000
8	G1/4“	N108E-008-001
8	G3/8“	N108E-008-002
10	G1/4“	N108E-010-001
10	G3/8“	N108E-010-002

Adapter incl. sealing ring

∅ mm	Thread	Order codes
4	M5	N120-004-005
4	G1/8“	N120-004-000
4	G1/4“	N120-004-001
6	M5	N120-006-005
6	G1/8“	N120-006-000
6	G1/4“	N120-006-001
8	G1/8“	N120-008-000
8	G1/4“	N120-008-001
8	G3/8“	N120-008-002
10	G1/4“	N120-010-001
10	G3/8“	N120-010-002
10	G1/2“	N120-010-003
12	G1/4“	N120-012-001
12	G3/8“	N120-012-002
12	G1/2“	N120-012-003

1 port banjo

∅ mm	Thread	Order codes
4	M5	N122-004-005
4	G1/8“	N122-004-000
6	M5	N122-006-005
6	G1/8“	N122-006-000
6	G1/4“	N122-006-001
8	G1/8“	N122-008-000
8	G1/4“	N122-008-001
8	G3/8“	N122-008-002
10	G1/4“	N122-010-001
10	G3/8“	N122-010-002
12	G1/4“	N122-012-001
12	G3/8“	N122-012-002*

2 ports banjo

∅ mm	Thread	Order codes
4	M5	N123-004-005
4	G1/8“	N123-004-000
6	M5	N123-006-005
6	G1/8“	N123-006-000
6	G1/4“	N123-006-001
8	G1/8“	N123-008-000
8	G1/4“	N123-008-001
8	G3/8“	N123-008-002
10	G1/4“	N123-010-001
10	G3/8“	N123-010-002
12	G1/4“	N123-012-001

Single banjo bolt incl. sealing rings

Thread	Order codes
M5	N124-000-005
G1/8“	N124-000-000
G1/4“	N124-000-001
G3/8“	N124-000-002

Double banjo bolt incl. sealing rings

Thread	Order codes
G1/8“	N125-000-000
G1/4“	N125-000-001
G3/8“	N125-000-002

For dimensions, check our website sappv.cz/r/f01e

*) This item has another design and/or colour and different technical data

10

Straight connector

∅ mm	∅ mm	Order codes
4	4	N100-004-000
4	6	N100-004-006*
6	6	N100-006-000
6	8	N100-006-008*
8	8	N100-008-000
10	10	N100-010-000
12	12	N100-012-000

Elbow connector

∅ mm	Order codes
4	N106-004-000
6	N106-006-000
8	N106-008-000
10	N106-010-000
12	N106-012-000
16	N106-016-000

X connector

∅ mm	Order codes
4	N117-004-000
6	N117-006-000
8	N117-008-000
10	N117-010-000
12	N117-012-000

Straight connector for 2 fittings

∅ mm	Order codes
4	N119-004-000
6	N119-006-000
8	N119-008-000
10	N119-010-000
12	N119-012-000

Reducer

D1 ∅ mm	D2 ∅ mm	Order codes
6	4	N121-006-004
8	4	N121-008-004
8	6	N121-008-006
10	6	N121-010-006
10	8	N121-010-008
12	6	N121-012-006
12	8	N121-012-008
12	10	N121-012-010

T connector

∅ mm	Order codes
4	N110-004-000
6	N110-006-000
8	N110-008-000
10	N110-010-000
12	N110-012-000
16	N110-016-000

T fitting with side thread incl. sealing ring

∅ mm	Thread	Order codes
4	M5	N115-004-005*
4	G1/8“	N115-004-000
6	M5	N115-006-005*
6	G1/8“	N115-006-000
6	G1/4“	N115-006-001
8	G1/8“	N115-008-000
8	G1/4“	N115-008-001
8	G3/8“	N115-008-002
10	G1/4“	N115-010-001
10	G3/8“	N115-010-002
10	G1/2“	N115-010-003
12	G1/4“	N115-012-001
12	G3/8“	N115-012-002
12	G1/2“	N115-012-003

T fitting with bottom thread incl. sealing ring

∅ mm	Thread	Order codes
4	M5	N113-004-005*
4	G1/8“	N113-004-000
6	M5	N113-006-005*
6	G1/8“	N113-006-000
6	G1/4“	N113-006-001
8	G1/8“	N113-008-000
8	G1/4“	N113-008-001
8	G3/8“	N113-008-002
10	G1/4“	N113-010-001
10	G3/8“	N113-010-002
10	G1/2“	N113-010-003
12	G1/4“	N113-012-001
12	G3/8“	N113-012-002
12	G1/2“	N113-012-003

Y connector

∅ mm	Order codes
4	N131-004-000
6	N131-006-000
8	N131-008-000*

Y fitting

∅ mm	Thread	Order codes
4	M5	N132-004-005
4	R1/8“	N132-004-000
6	R1/8“	N132-006-000

Plug

∅ mm	Order codes
4	N118-004-000
6	N118-006-000
8	N118-008-000
10	N118-010-000
12	N118-012-000

See page 10-2 for technical data

For dimensions, check our website sappv.cz/r/f01e

*) This item has another design and/or colour and different technical data

STRÁNSKÝ A PETRŽÍK

Technical data:
Working pressure: vacuum to 1.0 MPa
Temperature range: -20°C to +60°C
Materials: body - PBT, thread - nickel plated brass, release sleeve - POM, clamping ring - stainless steel, seals - NBR, bush - ZnDc
Medium: air
Suitable for tubes: PA6, PU
When inserting PU tubes it is recommended to press release sleeve to protect tube before scratching and possible inner sealing ring damage.

Straight incl. sealing ring

∅ mm	Thread	Order codes
4	M5	P102-004-005
4	G1/8“	P102-004-000
4	G1/4“	P102-004-001
6	M5	P102-006-005
6	G1/8“	P102-006-000
6	G1/4“	P102-006-001
6	G3/8“	P102-006-002
6	G1/2“	P102-006-003
8	G1/8“	P102-008-000
8	G1/4“	P102-008-001
8	G3/8“	P102-008-002
8	G1/2“	P102-008-003
10	G1/8“	P102-010-000
10	G1/4“	P102-010-001
10	G3/8“	P102-010-002
10	G1/2“	P102-010-003
12	G1/4“	P102-012-001
12	G3/8“	P102-012-002
12	G1/2“	P102-012-003

Straight with internal thread

∅ mm	Thread	Order codes
4	M5	P105-004-005
4	G1/8“	P105-004-000
4	G1/4“	P105-004-001
6	M5	P105-006-005
6	G1/8“	P105-006-000
6	G1/4“	P105-006-001
6	G3/8“	P105-006-002
6	G1/2“	P105-006-003
8	G1/8“	P105-008-000
8	G1/4“	P105-008-001
8	G3/8“	P105-008-002
8	G1/2“	P105-008-003
10	G1/8“	P105-010-000
10	G1/4“	P105-010-001
10	G3/8“	P105-010-002
10	G1/2“	P105-010-003
12	G1/4“	P105-012-001
12	G3/8“	P105-012-002
12	G1/2“	P105-012-003

Swivel elbow incl. sealing ring

∅ mm	Thread	Order codes
4	M5	P108-004-005
4	G1/8“	P108-004-000
4	G1/4“	P108-004-001
6	M5	P108-006-005
6	G1/8“	P108-006-000
6	G1/4“	P108-006-001
6	G3/8“	P108-006-002
6	G1/2“	P108-006-003
8	G1/8“	P108-008-000
8	G1/4“	P108-008-001
8	G3/8“	P108-008-002
8	G1/2“	P108-008-003
10	G1/8“	P108-010-000
10	G1/4“	P108-010-001
10	G3/8“	P108-010-002
10	G1/2“	P108-010-003
12	G1/4“	P108-012-001
12	G3/8“	P108-012-002
12	G1/2“	P108-012-003

Long swivel elbow incl. sealing ring

∅ mm	Thread	Order codes
4	M5	P108E-004-005
4	G1/8“	P108E-004-000
4	G1/4“	P108E-004-001
6	M5	P108E-006-005
6	G1/8“	P108E-006-000
6	G1/4“	P108E-006-001
6	G3/8“	P108E-006-002
6	G1/2“	P108E-006-003
8	G1/8“	P108E-008-000
8	G1/4“	P108E-008-001
8	G3/8“	P108E-008-002
8	G1/2“	P108E-008-003
10	G1/8“	P108E-010-000
10	G1/4“	P108E-010-001
10	G3/8“	P108E-010-002
10	G1/2“	P108E-010-003
12	G1/4“	P108E-012-001
12	G3/8“	P108E-012-002
12	G1/2“	P108E-012-003

Swivel elbow with internal thread

∅ mm	Thread	Order codes
4	M5	P109-004-005
4	G1/8“	P109-004-000
4	G1/4“	P109-004-001
6	M5	P109-006-005
6	G1/8“	P109-006-000
6	G1/4“	P109-006-001
6	G3/8“	P109-006-002
6	G1/2“	P109-006-003
8	G1/8“	P109-008-000
8	G1/4“	P109-008-001
8	G3/8“	P109-008-002
8	G1/2“	P109-008-003
10	G1/8“	P109-010-000
10	G1/4“	P109-010-001
10	G3/8“	P109-010-002
10	G1/2“	P109-010-003
12	G1/4“	P109-012-001
12	G3/8“	P109-012-002
12	G1/2“	P109-012-003

Swivel elbow 45° incl. sealing ring

∅ mm	Thread	Order codes
4	G1/8“	P127-004-000
4	G1/4“	P127-004-001
6	G1/8“	P127-006-000
6	G1/4“	P127-006-001
6	G3/8“	P127-006-002
6	G1/2“	P127-006-003
8	G1/8“	P127-008-000
8	G1/4“	P127-008-001
8	G3/8“	P127-008-002
8	G1/2“	P127-008-003
10	G1/8“	P127-010-000
10	G1/4“	P127-010-001
10	G3/8“	P127-010-002
10	G1/2“	P127-010-003
12	G1/4“	P127-012-001
12	G3/8“	P127-012-002
12	G1/2“	P127-012-003

Bulkhead fitting

∅ mm	Thread	Order codes
4	M12	P101-004-000
6	M14	P101-006-000
8	M16	P101-008-000
10	M18	P101-010-000
12	M22	P101-012-000

For dimensions, check our website sappv.cz/r/f02e

Swivel single port banjo incl. sealing ring

∅ mm	Thread	Order codes
4	M5	P137-004-005
4	G1/8“	P137-004-000
4	G1/4“	P137-004-001
6	M5	P137-006-005
6	G1/8“	P137-006-000
6	G1/4“	P137-006-001
6	G3/8“	P137-006-002
8	G1/8“	P137-008-000
8	G1/4“	P137-008-001
8	G3/8“	P137-008-002
8	G1/2“	P137-008-003
10	G1/8“	P137-010-000
10	G1/4“	P137-010-001
10	G3/8“	P137-010-002
10	G1/2“	P137-010-003
12	G3/8“	P137-012-002
12	G1/2“	P137-012-003

Y fitting incl. sealing ring

∅ mm	Thread	Order codes
4	M5	P132-004-005
4	G1/8“	P132-004-000
4	G1/4“	P132-004-001
6	M5	P132-006-005
6	G1/8“	P132-006-000
6	G1/4“	P132-006-001
6	G3/8“	P132-006-002
6	G1/2“	P132-006-003
8	G1/8“	P132-008-000
8	G1/4“	P132-008-001
8	G3/8“	P132-008-002
8	G1/2“	P132-008-003
10	G1/8“	P132-010-000
10	G1/4“	P132-010-001
10	G3/8“	P132-010-002
10	G1/2“	P132-010-003
12	G1/4“	P132-012-001
12	G3/8“	P132-012-002
12	G1/2“	P132-012-003

Reducer

D1 ∅ mm	D2 ∅ mm	Order codes
6	4	P121-006-004
8	4	P121-008-004
8	6	P121-008-006
10	6	P121-010-006
10	8	P121-010-008
12	8	P121-012-008
12	10	P121-012-010

T fitting with side thread incl. sealing ring

∅ mm	Thread	Order codes
4	M5	P115-004-005
4	G1/8“	P115-004-000
4	G1/4“	P115-004-001
6	M5	P115-006-005
6	G1/8“	P115-006-000
6	G1/4“	P115-006-001
6	G3/8“	P115-006-002
6	G1/2“	P115-006-003
8	G1/8“	P115-008-000
8	G1/4“	P115-008-001
8	G3/8“	P115-008-002
8	G1/2“	P115-008-003
10	G1/8“	P115-010-000
10	G1/4“	P115-010-001
10	G3/8“	P115-010-002
10	G1/2“	P115-010-003
12	G1/4“	P115-012-001
12	G3/8“	P115-012-002
12	G1/2“	P115-012-003

T fitting with bottom thread incl. sealing ring

∅ mm	Thread	Order codes
4	M5	P113-004-005
4	G1/8“	P113-004-000
4	G1/4“	P113-004-001
6	M5	P113-006-005
6	G1/8“	P113-006-000
6	G1/4“	P113-006-001
6	G3/8“	P113-006-002
6	G1/2“	P113-006-003
8	G1/8“	P113-008-000
8	G1/4“	P113-008-001
8	G3/8“	P113-008-002
8	G1/2“	P113-008-003
10	G1/8“	P113-010-000
10	G1/4“	P113-010-001
10	G3/8“	P113-010-002
10	G1/2“	P113-010-003
12	G1/4“	P113-012-001
12	G3/8“	P113-012-002
12	G1/2“	P113-012-003

X connector

∅ mm	Order codes
4	P117-004
6	P117-006
8	P117-008
10	P117-010
12	P117-012

T connector

∅ mm	Order codes
4	P110-004-000
6	P110-006-000
8	P110-008-000
10	P110-010-000
12	P110-012-000

T connector reduced

D1 ∅ mm	D2 ∅ mm	Order codes
2x 6	4	P110-006-004
2x 8	4	P110-008-004
2x 8	6	P110-008-006
2x 10	6	P110-010-006
2x 10	8	P110-010-008
2x 12	8	P110-012-008
2x 12	10	P110-012-010

Distributor connector reduced

Inlet D1 ∅ mm	Outlet D2 ∅ mm	Order codes
6	3x 4	P193-006-004
8	3x 4	P193-008-004
8	3x 6	P193-008-006
10	3x 6	P193-010-006
10	3x 8	P193-010-008

Distributor fitting incl. sealing ring

Inlet ∅ mm	Thread	Outlet ∅ mm	Order codes
6	G1/8“	3x 4	P194-006-004
8	G1/4“	3x 4	P194-008-004
8	G1/4“	3x 6	P194-008-006
10	G3/8“	3x 8	P194-010-008

Distributor connector

∅ mm	Order codes
4	P193-004-000
6	P193-006-000
8	P193-008-000

See page 10-4 for technical data

For dimensions, check our website sappv.cz/r/f02e

STRÁNSKÝ A PETRŽÍK

Straight connector

∅ mm	Order codes
4	P100-004-000
6	P100-006-000
8	P100-008-000
10	P100-010-000
12	P100-012-000

Straight connector reduced

∅ mm	∅ mm	Order codes
6	4	P100-006-004
8	4	P100-008-004
8	6	P100-008-006
10	8	P100-010-008
12	10	P100-012-010

Elbow connector

∅ mm	Order codes
4	P106-004-000
6	P106-006-000
8	P106-008-000
10	P106-010-000
12	P106-012-000

Y connector

∅ mm	Order codes
4	P131-004-000
6	P131-006-000
8	P131-008-000
10	P131-010-000
12	P131-012-000

Y connector reduced

D1 ∅ mm	D2 ∅ mm	Order codes
6	2x 4	P131-006-004
8	2x 4	P131-008-004
8	2x 6	P131-008-006
10	2x 6	P131-010-006
10	2x 8	P131-010-008
12	2x 8	P131-012-008
12	2x 10	P131-012-010

Plug

∅ mm	Order codes
4	P118-004
6	P118-006
8	P118-008
10	P118-010
12	P118-012

See page 10-4 for technical data

For dimensions, check our website sappv.cz/r/f02e

Technical data:
Max. pressure: 1.6 MPa
Temperature range: -20°C to +150°C
Materials: body, bush, release sleeve, clamping ring - stainless steel AISI 316L, seals - FKM
Medium: air, liquids and gases according to compatibility with fitting and tube materials
Suitable for tubes: PA6, PA11, PU, PTFE
When inserting PU and PTFE tubes it is recommended to press release sleeve to protect tube before scratching and possible inner sealing ring damage.

Straight incl. sealing ring

∅ mm	Thread	Order codes
4	M5	N102S-004-005
4	G1/8“	N102S-004-000
6	M5	N102S-006-005
6	G1/8“	N102S-006-000
6	G1/4“	N102S-006-001
8	G1/8“	N102S-008-000
8	G1/4“	N102S-008-001
10	G1/4“	N102S-010-001
10	G3/8“	N102S-010-002
10	G1/2“	N102S-010-003
12	G1/4“	N102S-012-001
12	G3/8“	N102S-012-002
12	G1/2“	N102S-012-003

Bulkhead fitting

∅ mm	Thread	Order codes
4	M11x0,75	N101S-004-000
6	M14x1	N101S-006-000
8	M16x1	N101S-008-000
10	M18x1	N101S-010-000
12	M22x1,5	N101S-012-000

Swivel elbow incl. sealing ring

∅ mm	Thread	Order codes
4	M5	N108S-004-005
4	G1/8“	N108S-004-000
4	G1/4“	N108S-004-001
6	M5	N108S-006-005
6	G1/8“	N108S-006-000
6	G1/4“	N108S-006-001
8	G1/8“	N108S-008-000
8	G1/4“	N108S-008-001
10	G1/4“	N108S-010-001
10	G3/8“	N108S-010-002
12	G1/4“	N108S-012-001
12	G3/8“	N108S-012-002
12	G1/2“	N108S-012-003

Straight connector

∅ mm	∅ mm	Order codes
4	4	N100S-004-000
6	6	N100S-006-000
8	8	N100S-008-000
10	10	N100S-010-000
12	12	N100S-012-000

Elbow connector

∅ mm	Order codes
4	N106S-004-000
6	N106S-006-000
8	N106S-008-000
10	N106S-010-000
12	N106S-012-000

T connector

∅ mm	Order codes
4	N110S-004-000
6	N110S-006-000
8	N110S-008-000
10	N110S-010-000
12	N110S-012-000

T fitting with bottom thread incl. sealing ring

∅ mm	Thread	Order codes
4	M5	N113S-004-005
4	G1/8“	N113S-004-000
6	G1/8“	N113S-006-000
6	G1/4“	N113S-006-001
8	G1/8“	N113S-008-000
8	G1/4“	N113S-008-001
10	G1/4“	N113S-010-001
10	G3/8“	N113S-010-002

Reducer

D1 ∅ mm	D2 ∅ mm	Order codes
6	4	N121S-006-004
8	6	N121S-008-006
10	8	N121S-010-008

For dimensions, check our website sappv.cz/r/f03e

Technical data:
Working pressure: vacuum to 1.5 MPa
Temperature range: -18°C to +70°C
Material: nickel plated brass
Medium: air, liquids and gases according to compatibility with fitting and tube materials
Suitable for tubes: PA6, PA11, PU, PE, PTFE
The sealing ring is not included (unless otherwise stated) and must be ordered separately - see page 10-8.

Straight

∅ mm	Thread	Order codes
4/2	M5	N341-004-005
4/2	G1/8“	N341-004-000
6/4	M5	N341-006-005
6/4	G1/8“	N341-006-000
6/4	G1/4“	N341-006-001
6/4	G3/8“	N341-006-002
8/6	G1/8“	N341-008-000
8/6	G1/4“	N341-008-001
8/6	G3/8“	N341-008-002
8/6	G1/2“	N341-008-003*
10/8	G1/8“	N341-010-000
10/8	G1/4“	N341-010-001
10/8	G3/8“	N341-010-002
10/8	G1/2“	N341-010-003*
12/9	G3/8“	N341-912-002*
12/9	G1/2“	N341-912-003*
12/10	G3/8“	N341-012-002
12/10	G1/2“	N341-012-003*
12/10	G3/4“	N341-012-006*
12/10	G1“	N341-012-007*
15/12	G1/2“	N341-015-003*
15/12	G3/4“	N341-015-006*
15/12	G1“	N341-015-007*

Straight with tube guard incl. sealing ring (NBR)

∅ mm	Thread	Order codes
6/4	G1/8“	N180-006-000
6/4	G1/4“	N180-006-001
6/4	G3/8“	N180-006-002
6/4	G1/2“	N180-006-003
8/6	G1/8“	N180-008-000
8/6	G1/4“	N180-008-001
8/6	G3/8“	N180-008-002
8/6	G1/2“	N180-008-003
10/8	G1/8“	N180-010-000
10/8	G1/4“	N180-010-001
10/8	G3/8“	N180-010-002
10/8	G1/2“	N180-010-003
12/10	G3/8“	N180-012-002
12/10	G1/2“	N180-012-003

Bulkhead fitting

∅ mm	Thread	Order codes
4/2	M7x0.5	N345-004-000
6/4	M10x1	N345-006-000
8/6	M12x1	N345-008-000
10/8	M14x1	N345-010-000

Elbow connector

∅ mm	Order codes
4/2	N348-004-000
6/4	N348-006-000
8/6	N348-008-000
10/8	N348-010-000

Elbow with internal thread

∅ mm	Thread	Order codes
4/2	G1/8“	N347-004-000
6/4	G1/8“	N347-006-000
6/4	G1/4“	N347-006-001
8/6	G1/8“	N347-008-000
8/6	G1/4“	N347-008-001

X connector

∅ mm	Order codes
6/4	N354-006-000
8/6	N354-008-000
10/8	N354-010-000

Swivel elbow incl. sealing ring (NBR)

∅ mm	Thread	Order codes
6/4	G1/8“	N349-006-000
6/4	G1/4“	N349-006-001
8/6	G1/8“	N349-008-000
8/6	G1/4“	N349-008-001
10/8	G1/4“	N349-010-001

T connector

∅ mm	Order codes
4/2	N353-004-000
6/4	N353-006-000
8/6	N353-008-000
10/8	N353-010-000
12/10	N353-012-000

Push-on nut

∅ mm	Order codes
4/2	N368-004-000
6/4	N368-006-000
8/6	N368-008-000
10/8	N368-010-000
12/10	N368-012-000

Single banjo bolt incl. plastic sealing rings

Thread	Order codes
M5	N324-005
G1/8“	N324-000
G1/4“	N324-001
G3/8“	N324-002*
G1/2“	N324-003*

Double banjo bolt incl. plastic sealing rings

Thread	Order codes
G1/8“	N325-000
G1/4“	N325-001
G3/8“	N325-002*
G1/2“	N325-003*

1 port banjo

∅ mm	Thread	Order codes
6/4	M5	N355-006-005
6/4	G1/8“	N355-006-000
6/4	G1/4“	N355-006-001
8/6	G1/8“	N355-008-000
8/6	G1/4“	N355-008-001
8/6	G3/8“	N355-008-002*
8/6	G1/2“	N355-008-003*
10/8	G1/4“	N355-010-001
10/8	G3/8“	N355-010-002*
10/8	G1/2“	N355-010-003*
12/9	G1/4“	N355-912-001*
12/9	G3/8“	N355-912-002*
12/10	G3/8“	N355-012-002*
12/10	G1/2“	N355-012-003*

2 ports banjo

∅ mm	Thread	Order codes
6/4	G1/8“	N356-006-000
6/4	G1/4“	N356-006-001
8/6	G1/8“	N356-008-000
8/6	G1/4“	N356-008-001
8/6	G3/8“	N356-008-002*
10/8	G1/4“	N356-010-001
10/8	G3/8“	N356-010-002*
12/9	G3/8“	N356-912-002*
12/10	G3/8“	N356-012-002*
12/10	G1/2“	N356-012-003*

For dimensions, check our website sappv.cz/r/f04e

*) The item has a different shape, material and finish compared to other items in the series and may have different technical parameters

Straight with internal thread

∅ mm	Thread	Order codes
4/2	G1/8“	N343-004-000
6/4	G1/8“	N343-006-000
6/4	G1/4“	N343-006-001
8/6	G1/8“	N343-008-000
8/6	G1/4“	N343-008-001
8/6	G3/8“	N343-008-002
10/8	G1/8“	N343-010-000
10/8	G1/4“	N343-010-001
10/8	G3/8“	N343-010-002

Straight connector

∅ mm	∅ mm	Order codes
4/2	4/2	N344-004-000
6/4	6/4	N344-006-000
6/4	8/6	N344-006-008+
8/6	8/6	N344-008-000
8/6	10/8	N344-008-010+
10/8	10/8	N344-010-000
12/10	12/10	N344-012-000
15/12	15/12	N344-015-000+

See page 10-7 for technical data

For dimensions, check our website sappv.cz/r/f04e

*) The item has a different shape, material and finish compared to other items in the series and may have different technical parameters

Technical data:
Working pressure: vacuum to 1.5 MPa
Temperature range: -18°C to +70°C
Material: nickel plated brass
Medium: air, liquids and gases according to compatibility with fitting and tube materials
Suitable for tubes: PA6, PA11, PU, PE, PTFE
The sealing ring is not included and must be ordered separately - see page 10-8. The tube must be fixed by tube clamp - see page 10-11.

Straight with external thread

∅ mm	Thread	Order codes
4	G1/8“	N460-004-000*
4	G1/4“	N460-004-001*
6	G1/8“	N460-006-000
6	G1/4“	N460-006-001*
7	G1/8“	N460-007-000
7	G1/4“	N460-007-001
8	G1/8“	N460-008-000
8	G1/4“	N460-008-001
8	G3/8“	N460-008-002*
8	G1/2“	N460-008-003*
9	G1/8“	N460-009-000
9	G1/4“	N460-009-001
9	G3/8“	N460-009-002
10	G3/8“	N460-010-002*
10	G1/2“	N460-010-003*
12	G1/4“	N460-012-001
12	G3/8“	N460-012-002
12	G1/2“	N460-012-003
14	G3/8“	N460-014-002
17	G3/8“	N460-017-002
17	G1/2“	N460-017-003

Straight with internal thread

∅ mm	Thread	Order codes
6	G1/8“	N455-006-000
7	G1/8“	N455-007-000
7	G1/4“	N455-007-001
8	G1/8“	N455-008-000
8	G1/4“	N455-008-001*
9	G1/4“	N455-009-001*
9	G3/8“	N455-009-002*
10	G3/8“	N455-010-002*
12	G3/8“	N455-012-002
12	G1/2“	N455-012-003

Elbow with external thread

∅ mm	Thread	Order codes
6	R1/8“	N491-006-000
6	R1/4“	N491-006-001
7	R1/8“	N491-007-000
7	R1/4“	N491-007-001

*) The item has a different shape, material and finish compared to other items in the series and may have different technical parameters

For dimensions, check our website sappv.cz/r/f05e

Plastic sealing ring

Temp. range: -18°C to +60°C, **Material**: polypropylen

Thread	Order codes
M5	3910 2002 1000 0030
G1/8“	3910 2004 1000 0030
G1/4“	3910 2006 1000 0030
G3/8“	3910 2008 1000 0030
G1/2“	3910 2010 1000 0030

Aluminium sealing ring

Temperature range: -60°C to +200°C

Thread	Order codes
M5	3910 2002 0000 0022
G1/8“	3910 2004 0000 0022
G1/4“	3910 2006 0000 0022
G3/8“	3910 2008 0000 0022
G1/2“	3910 2010 0000 0022
G3/4“	3910 2012 0000 0022
G1“	3910 2014 0000 0022

Teflon thread tape

Temperature range: -60°C to +200°C

Width	Length	Order codes
10 mm	10 m	3910 2210 0110 0035
19 mm	15 m	3910 2219 0215 0035

Technical data:
Working pressure: vacuum to 1.5 MPa
Temperature range: -18°C to +70°C
Material: nickel plated brass
Medium: air, liquids and gases according to compatibility with fitting
The sealing ring is not included (unless otherwise stated) and must be ordered separately - see page 10-8.

Reducer

External thread	Internal thread	Order codes
G1/8“	M5	N449-000-005*
G1/4“	M5	N449-001-005*
G1/4“	G1/8“	N449-001-000
G3/8“	G1/8“	N449-002-000
G3/8“	G1/4“	N449-002-001
G1/2“	G1/8“	N449-003-000
G1/2“	G1/4“	N449-003-001
G1/2“	G3/8“	N449-003-002
G3/4“	G3/8“	N449-006-002*
G3/4“	G1/2“	N449-006-003
G1“	G3/8“	N449-007-002*
G1“	G1/2“	N449-007-003
G1“	G3/4“	N449-007-006*

Enlarging reducer

External thread	Internal thread	Order codes
M5	G1/8“	N445-005-000*
G1/8“	G1/4“	N445-000-001
G1/8“	G3/8“	N445-000-002
G1/4“	G3/8“	N445-001-002
G1/4“	G1/2“	N445-001-003
G3/8“	G1/2“	N445-002-003

Thread reducer G→NPTF

External thread	Internal thread	Order codes
G1/8“	1/8“ NPTF	NIN439-000-020
G1/4“	1/4“ NPTF	NIN439-001-021
G3/8“	3/8“ NPTF	NIN439-002-022
G1/2“	1/2“ NPTF	NIN439-003-023
G3/4“	3/4“ NPTF	NIN439-006-026

Thread reducer NPTF→G

External thread	Internal thread	Order codes
1/8“ NPTF	G1/8“	NIN438-020-000*
1/4“ NPTF	G1/4“	NIN438-021-001
3/8“ NPTF	G3/8“	NIN438-022-002*
1/2“ NPTF	G1/2“	NIN438-023-003*

Plug with internal hexagon socket incl. sealing ring

Thread	Order codes
M5	N411-005
G1/8“	N411-000
G1/4“	N411-001
G3/8“	N411-002
G1/2“	N411-003
G3/4“	N411-006*
G1“	N411-007*

Plug with internal hexagon socket

Thread	Order codes
R1/8“	N412-000
R1/4“	N412-001
R3/8“	N412-002
R1/2“	N412-003

Plug with internal thread

Thread	Order codes
G1/8“	N453-000
G1/4“	N453-001
G3/8“	N453-002
G1/2“	N453-003

Prolonging fitting

External thread	Internal thread	Length	Order codes
M5	M5	14	N447-005-014*
G1/8“	G1/8“	36	N447-000-036
G1/4“	G1/4“	43	N447-001-043
G3/8“	G3/8“	40	N447-002-040*
G1/2“	G1/2“	50	N447-003-050*

Short prolonging fitting

Thread	Length	Order codes
G1/8“	11	N445-000-000
G1/4“	11,5	N445-001-001
G3/8“	15	N445-002-002
G1/2“	16,5	N445-003-003

Hexagonal nut

Thread	Order codes
G1/8“	N489-000
G1/4“	N489-001
G3/8“	N489-002
G1/2“	N489-003

L coupling internal / external threads

External thread	Internal thread	Order codes
M5	M5	N458-005-005
R1/8“	G1/8“	N458-000-000
R1/4“	G1/4“	N458-001-001
R3/8“	G3/8“	N458-002-002
R1/2“	G1/2“	N458-003-003
R3/4“	G3/4“	N458-006-006
R1“	G1“	N458-007-007

L coupling 2x external threads

Thread	Order codes
R1/8“	N459-000-000
R1/4“	N459-001-001
R3/8“	N459-002-002
R1/2“	N459-003-003
R3/4“	N459-006-006
R1“	N459-007-007

L coupling 2x internal threads

Thread	Order codes
G1/8“	N456-000
G1/4“	N456-001
G3/8“	N456-002
G1/2“	N456-003
G3/4“	N456-006
G1“	N456-007

T connector 3x internal threads

Thread	Order codes
G1/8“	N461-000
G1/4“	N461-001
G3/8“	N461-002
G1/2“	N461-003
G3/4“	N461-006

T connector 1x external, 2x internal threads

External thread	Internal thread	Order codes
M5	M5	N462-005-005
R1/8“	G1/8“	N462-000-000
R1/4“	G1/4“	N462-001-001
R3/8“	G3/8“	N462-002-002
R1/2“	G1/2“	N462-003-003
R3/4“	G3/4“	N462-006-006*
R1“	G1“	N462-007-007*

For dimensions, check our website sappv.cz/r/f07e

*) The item has a different shape, material and finish compared to other items in the series and may have different technical parameters

STRÁNSKÝ A PETRŽÍK

T connector 3x external threads

Thread	Order codes
R1/8“	N464-000
R1/4“	N464-001
R3/8“	N464-002
R1/2“	N464-003

T connector 1x external, 2x internal threads

External thread	Internal thread	Order codes
R1/8“	G1/8“	N466-000-000
R1/4“	G1/4“	N466-001-001
R3/8“	G3/8“	N466-002-002
R1/2“	G1/2“	N466-003-003

T connector 2x external, 1x internal threads

External thread	Internal thread	Order codes
R1/8“	G1/8“	N465-000-000
R1/4“	G1/4“	N465-001-001
R3/8“	G3/8“	N465-002-002
R1/2“	G1/2“	N465-003-003

T connector 2x external, 1x internal threads

External thread	Internal thread	Order codes
R1/8“	G1/8“	N463-000-000
R1/4“	G1/4“	N463-001-001
R3/8“	G3/8“	N463-002-002
R1/2“	G1/2“	N463-003-003

X connector

Thread	Order codes
G1/8“	N457-000
G1/4“	N457-001
G3/8“	N457-002
G1/2“	N457-003

X connector 1x external, 3x internal threads

External thread	Internal thread	Order codes
R1/8“	G1/8“	N485-000-000
R1/4“	G1/4“	N485-001-001
R3/8“	G3/8“	N485-002-002
R1/2“	G1/2“	N485-003-003

Bulkhead fitting

Internal thread	External thread	Order codes
M5	M10x1	N446-005
G1/8“	M16x1.5	N446-000
G1/4“	M20x1.5	N446-001
G3/8“	M26x1.5	N446-002
G1/2“	M28x1.5	N446-003

Y connector 3x internal threads

Thread	Order codes
G1/8“	N498A-000
G1/4“	N498A-001
G3/8“	N498A-002
G1/2“	N498A-003

Y connector 1x external, 2x internal threads

External thread	Internal thread	Order codes
R1/8“	G1/8“	N498-000-000
R1/4“	G1/4“	N498-001-001
R3/8“	G3/8“	N498-002-002
R1/2“	G1/2“	N498-003-003

Double nipple

Thread	Order codes
M5	N442-005-005*
G1/8“	N442-000-000
G1/4“	N442-001-001
G3/8“	N442-002-002
G1/2“	N442-003-003
G3/4“	N442-006-006*

Reduced double nipple

Thread	Thread	Order codes
M5	G1/8“	N443-005-000*
G1/8“	G1/4“	N443-000-001
G1/4“	G3/8“	N443-001-002
G1/4“	G1/2“	N443-001-003
G3/8“	G1/2“	N443-002-003

Coupling

Thread	Order codes
M5	N450-005-005*
G1/8“	N450-000-000
G1/4“	N450-001-001
G3/8“	N450-002-002
G1/2“	N450-003-003
G3/4“	N450-006-006

Reduced coupling

Thread	Thread	Order codes
G1/4“	G1/8“	N451-001-000
G3/8“	G1/8“	N451-002-000
G3/8“	G1/4“	N451-002-001
G1/2“	G1/8“	N451-003-000
G1/2“	G1/4“	N451-003-001
G1/2“	G3/8“	N451-003-002

See page 10-9 for technical data

For dimensions, check our website sappv.cz/r/f07e

Square distribution block

Material: anodized dural

Thread	Order codes
4x G1/8“	3920 0404 0000 0020
4x G1/4“	3920 0406 0000 0020
4x G3/8“	3920 0408 0000 0020
4x G1/2“	3920 0410 0000 0020

Rectangular distribution block

Material: anodized dural

Inlet thread	Outlet thread	Order codes
1x G1/4“	3x G1/8“	3921 0106 0304 0020
1x G1/4“	4x G1/8“	3921 0106 0404 0020
2x G1/4“	5x G1/8“	3921 0206 0504 0020
2x G1/4“	6x G1/8“	3921 0206 0604 0020
1x G3/8“	3x G1/4“	3921 0108 0306 0020
1x G3/8“	4x G1/4“	3921 0108 0406 0020
2x G3/8“	5x G1/4“	3921 0208 0506 0020
2x G3/8“	6x G1/4“	3921 0208 0606 0020
1x G1/2“	3x G3/8“	3921 0110 0308 0020
1x G1/2“	4x G3/8“	3921 0110 0408 0020
2x G1/2“	5x G3/8“	3921 0210 0508 0020
2x G1/2“	6x G3/8“	3921 0210 0608 0020
1x G3/4“	3x G1/2“	3921 0112 0310 0020
1x G3/4“	4x G1/2“	3921 0112 0410 0020
2x G3/4“	5x G1/2“	3921 0212 0510 0020
2x G3/4“	6x G1/2“	3921 0212 0610 0020

For dimensions, check our website sappv.cz/r/f08e

Blow gun

with stainless steel replaceable nozzle

Working pressure: 0 to 1,2 MPa, **Nozzle length**: 90 mm
Temp. range: -10°C to +80°C, **Material**: plastic, stainless steel

Thread	Order codes
G1/4“	3910 3010 0600 0110

with safety stainless steel replaceable nozzle, 2 ports

Working pressure: 0 to 1,2 MPa, **Nozzle length**: 90 mm
Temp. range: -10°C to +80°C, **Material**: plastic, stainless steel

Thread	Order codes
2x G1/4“	3910 3010 0600 0210

standard

Working pressure: 0 to 1.2 MPa, **Nozzle length**: 100 mm
Temp. range: -20°C to +50°C, **Material**: plastic, aluminium

Thread	Order codes
G1/4“	3910 3010 0600 0010

For dimensions, check our website sappv.cz/r/f09e

*) The item has a different shape, material and finish compared to other items in the series and may have different technical parameters

Technical data:
Working pressure: 0 to 1.2 MPa
Temperature range: -10°C to +80°C
Material: sintered bronze, brass nipple
Medium: air

Sintered bronze/brass silencer

Thread	Order codes
M5	NSE05S
G1/8“	NSE10S
G1/4“	NSE25S
G3/8“	NSE37S
G1/2“	NSE50S
G3/4“	NSE75S
G1“	NSE100S

Sintered bronze silencer

Thread	Order codes
G1/8“	NU010051
G1/4“	NU010052
G3/8“	NU010053
G1/2“	NU010054
G3/4“	NU010055
G1“	NU010056

Sintered bronze low profile silencer

Thread	Order codes
G1/8“	NSF10B
G1/4“	NSF25B
G3/8“	NSF37B
G1/2“	NSF50B
G3/4“	NSF75B
G1“	NSF100B

Sintered bronze short silencer

Thread	Order codes
M5	NSFG05S
G1/8“	NSFG10S
G1/4“	NSFG25S
G3/8“	NSFG37S
G1/2“	NSFG50S
G3/4“	NSFG75S
G1“	NSFG100S

Technical data:
Working pressure: vacuum to 1.2 MPa
Temperature range: -10°C to +80°C
Material: sintered bronze, brass nipple, stainless steel spring, **Medium**: air

Silencer with speed control

Thread	Order codes
G1/8“	NSE10RM
G1/4“	NSE25RM
G3/8“	NSE37RM
G1/2“	NSE50RM
G3/4“	NSE75RM
G1“	NSE100RM

Technical data:
Working pressure: 0 to 1.0 MPa
Temperature range: -10°C to +70°C
Material: polyethylene
Medium: air

Sintered plastic PE silencer

Thread	Order codes
M5	NSE05K
G1/8“	NSE10K
G1/4“	NSE25K
G3/8“	NSE37K
G1/2“	NSE50K
G3/4“	NSE75K
G1“	NSE100K

Push-in sint. plastic PE silencer

∅ mm	Order codes
4	NSE04KP
6	NSE06KP
8	NSE08KP
10	NSE10KP
12	NSE12KP

Technical data:
Working pressure: 0 to 1.0 (4.0) MPa
Temperature range: -25°C to +100°C
Material: aluminium, steel, fibre
Medium: air (flow at 0.6 MPa)

High flow silencer up to 1 MPa

R1/8“-2“

R3“-6“

Thread	Flow [Nl/min]	Order codes
G1/8“	1 500	NSE10HB
G1/4“	3 100	NSE25HB
G3/8“	6 200	NSE37HB
G1/2“	9 000	NSE50HB
G3/4“	19 700	NSE75HB
G1“	28 200	NSE100HB
G1 1/4“	45 100	NSE125HB
G1 1/2“	73 300	NSE150HB
G2“	118 600	NSE200HB
G3“	254 000	NSE300HB

High flow silencer up to 4 MPa

R1/8“-2“

R3“-6“

Thread	Flow [Nl/min]	Order codes
G1/8“	1 500	NSE10HP
G1/4“	3 100	NSE25HP
G3/8“	6 200	NSE37HP
G1/2“	9 000	NSE50HP
G3/4“	19 700	NSE75HP
G1“	28 200	NSE100HP
G1 1/4“	45 100	NSE125HP
G1 1/2“	73 300	NSE150HP
G2“	118 600	NSE200HP
G3“	254 000	NSE300HP

For dimensions, check our website sappv.cz/r/f10e

Plastic tube cutter

For tubes: PA6, PA11, PU, PE, PTFE

Max. tube diameter ∅ D	Order codes
12	N125-468

Metal tube cutter

For tubes: PA6, PA11, PU, PE, PTFE

Max. tube diameter ∅ D	Order codes
12	NTCM468
25	NTCM468-25

Multiple tube holder

Temp. range: -10°C to +60°C, **Material**: polyethylene

For tube ∅ D	No. of tube positi-ons	Order codes
4	8	3095 1004 0000 0000
6	8	3095 1006 0000 0000
8	7	3095 1008 0000 0000
10	6	3095 1010 0000 0000
12	5	3095 1012 0000 0000

Particular holders are detachable, each holder has mounting hole for fixing by screw.

Tubing strap

Temp. range: -20°C to +70°C, **Material**: nylon

Size	Order codes
4.8 x 178	3095 2000 4801 7800
4.8 x 250	3095 2000 4802 5000

Spiral wrap

Temp. range: -50°C to +90°C, **Material**: polyethylene

Diameter	Order codes
15 to 80	3095 2500 1500 8000

Tube clamp

Material: zinc plated steel, **For tubes with pressure up to**: 2,5 MPa

Diameter	Order codes
8 to 12	3910 1000 8012 0000
10 to 16	3910 1001 0016 0000
12 to 20	3910 1001 2020 0000
16 to 25	3910 1001 6025 0000
20 to 32	3910 1002 0032 0000
25 to 40	3910 1002 5040 0000
32 to 50	3910 1003 2050 0000
50 to 70	3910 1005 0070 0000
70 to 90	3910 1007 0090 0000
90 to 110	3910 1009 0110 0000
110 to 130	3910 1011 0130 0000
130 to 150	3910 1013 0150 0000
140 to 160	3910 1014 0160 0000

STRÁNSKÝ A PETRŽÍK

Tube PU polyurethan

Technical data:
Standard tube color is blue.
Temperature range: -20˚C to +60˚C

With temperature the pressure changes as follows:

-20˚C	0˚C	20˚C	40˚C	60˚C
180%	140%	100%	70%	50%

Diameter		Min. bending radius	Max. pressure at 20˚C [MPa]	Order codes - color					
outside D mm	inside d mm			blue	red	yellow	green	white	black
4	2 (2.5)	13	2.5	**3020 0004 0200 0010**	3020 0004 0200 0011	3020 0004 0200 0012	3020 0004 0200 0013	3020 0004 0200 0016	3020 0004 0200 0020
6	4	20	1.6	**3020 0006 0400 0010**	3020 0006 0400 0011	3020 0006 0400 0012	3020 0006 0400 0013	3020 0006 0400 0016	3020 0006 0400 0020
8	6	30	1.1	**3020 0008 0600 0010**	3020 0008 0600 0011	3020 0008 0600 0012	3020 0008 0600 0013	3020 0008 0600 0016	3020 0008 0600 0020
10	6.5	30	1.0	**3020 0010 0600 0010**	3020 0010 0600 0011			3020 0010 0600 0016	
10	8	40	0.9	**3020 0010 0800 0010**	3020 0010 0800 0011			3020 0010 0800 0016	3020 0010 0800 0020
12	8	35	1.2	**3020 0012 0800 0010**	3020 0012 0800 0011			3020 0012 0800 0016	
12	9	50	1.1	**3020 0012 0900 0010**	3020 0012 0900 0011			3020 0012 0900 0016	
16	11	55	1.0	**3020 0016 1100 0010**					

Tube PA6 polyamide

Technical data:
Standard tube color is blue
(black for tube dia. 12/9 and 15/12).
Temperature range: -20˚C to +90˚C

With temperature the pressure changes as follows:

-20˚C	0˚C	20˚C	40˚C	60˚C	80˚C	90˚C
180%	140%	100%	70%	50%	45%	38%

Diameter		Min. bending radius	Max. pressure at 20˚C [MPa]	Order codes - color					
outside D mm	inside d mm			blue	red	yellow	green	white	black
4	2	25	4.9	**3010 0004 0200 0010**	3010 0004 0200 0011	3010 0004 0200 0012	3010 0004 0200 0013	3010 0004 0200 0016	3010 0004 0200 0020
6	4	35	3.0	**3010 0006 0400 0010**	3010 0006 0400 0011			3010 0006 0400 0016	3010 0006 0400 0020
8	6	45	2.1	**3010 0008 0600 0010**				3010 0008 0600 0016	3010 0008 0600 0020
10	8	60	1.7	**3010 0010 0800 0010**	3010 0010 0800 0011			3010 0010 0800 0016	3010 0010 0800 0020
12	9	80	1.9						**3010 0012 0900 0020**
12	10	70	1.3	**3010 0012 1000 0010**				3010 0012 1000 0016	
15	12	100	1.5						**3010 0015 1200 0020**
16	12	150	1.8	3010 0016 1200 0010					

Spiral tube PU polyurethan

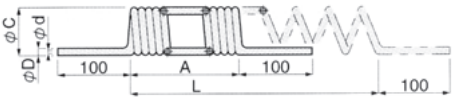

Technical data:
Standard tube color is blue.
Temperature range: -15˚C to +60˚C
Pressure range: -0.1 to 0.7 MPa at 20˚C

Ø D	Ø d	Ø C	A	L	Order codes
4	2.5	24	120	360	PUML 04 - 2
4	2.5	24	180	540	PUML 04 - 3
4	2.5	24	350	1100	PUML 04 - 5
4	2.5	24	480	1500	PUML 04 - 7
4	2.5	24	700	2100	PUML 04 - 10
4	2.5	24	1040	3200	PUML 04 - 14
4	2.5	24	1450	4400	PUML 04 - 20

Ø D	Ø d	Ø C	A	L	Order codes
6	4	30	160	500	PUML 06 - 2
6	4	30	230	700	PUML 06 - 3
6	4	30	430	1300	PUML 06 - 5
6	4	30	620	1900	PUML 06 - 7
6	4	30	910	2800	PUML 06 - 10
6	4	30	1300	3900	PUML 06 - 14
6	4	30	1850	5600	PUML 06 - 20

Ø D	Ø d	Ø C	A	L	Order codes
8	5	42	250	750	PUML 08 - 3
8	5	42	390	1200	PUML 08 - 5
8	5	42	540	1700	PUML 08 - 7
8	5	42	770	2400	PUML 08 - 10
8	5	42	1045	3200	PUML 08 - 14
8	5	42	1550	4700	PUML 08 - 20

Ø D	Ø d	Ø C	A	L	Order codes
10	6.5	58	330	1000	PUML 10 - 5
10	6.5	58	470	1400	PUML 10 - 7
10	6.5	58	680	2100	PUML 10 - 10
10	6.5	58	970	3000	PUML 10 - 14
10	6.5	58	1380	4200	PUML 10 - 20

Ø D	Ø d	Ø C	A	L	Order codes
12	8	72	310	1000	PUML 12 - 5
12	8	72	450	1400	PUML 12 - 7
12	8	72	660	2000	PUML 12 - 10
12	8	72	920	2800	PUML 12 - 14
12	8	72	1320	4000	PUML 12 - 20

A ... length in idle condition
L ... working length
C ... spiral diameter
Values in table are mentioned in mm.

Other tube colors are available on request. Add the code for the desired color at the end of the order code:
-B ... black
-R ... red
-O ... orange
-T ... transparent
-Y ... yellow

We rocommend to use straight push-on fittings wirh tube guard for spiral tubes.
See page 10-7.

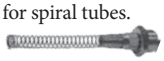

Spiral tube PA6 polyamide

Technical data:
Standard tube color is blue.
Temperature range: -20˚C to +90˚C

With temperature the pressure changes as follows:

-20˚C	0˚C	20˚C	40˚C	60˚C	80˚C	90˚C
180%	140%	100%	70%	50%	45%	38%

Outside diameter ∅ D mm	Inside diameter ∅ D mm	Spiral diameter	Max. pressure at 20˚C [MPa]	Order codes
6	4	72	3.0	3010 1006 0400 0010
8	6	96	2.1	3010 1008 0600 0010
10	8	120	1.7	3010 1010 0800 0010
12	10	144	1.3	3010 1012 1000 0010

The length of the coil hose is specified in the unfolded state. The working length is maximum 1/2 length (0.3 to 0.4 times recommended) of the unfolded state. The maximum possible length is 30 m in the unfolded state. Tubes can be connected for longer lengths.

We rocommend to use straight push-on fittings wirh tube guard for spiral tubes. See page 10-7.

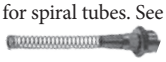

Tube PE-LD polyethylene

Technical data:
Temperature range: -5˚C to +40˚C
The tube is only suitable for low air pressure applications.

Outside diameter ∅ D mm	Inside diameter ∅ D mm	Min. bending radius	Max. pressure at 20˚C [MPa]	Order codes - color	
				transparent	blue
6	4	28	1.7	3070 0006 0400 0015	3070 0006 0400 0010
8	6	40	1.3	3070 0008 0600 0015	3070 0008 0600 0010
10	8	57	0.9	3070 0010 0800 0015	3070 0010 0800 0010
12	9	75	0.7	3070 0012 0900 0015	

Tube PTFE teflon

Technical data:
Standard tube color is transparent.
Temperature range: -200˚C to +250 (200)˚C under static (dynamic) using.

With temperature the pressure changes as follows:

20˚C	50˚C	100˚C	150˚C	200˚C
100%	50%	35%	30%	10%

Outside diameter ∅ D mm	Inside diameter ∅ D mm	Min. bending radius	Max. pressure at 20˚C [MPa]	Order codes
4	2	20	2.5	3030 0004 0200 0015
6	4	40	1.8	3030 0006 0400 0015
8	6	60	1.4	3030 0008 0600 0015
10	8	100	1.2	3030 0010 0800 0015
12	10	120	1.0	3030 0012 1000 0015

Tube EPDM

Technical data:
Standard tube color is black.
Temperature range: -40˚C to +95˚C

Outside diameter ∅ D mm	Inside diameter ∅ D mm	Min. bending radius	Max. pressure at 20˚C [MPa]	Order codes
13	6	72	2.0	3090 0013 0600 0020
15	8	96	2.0	3090 0015 0800 0020
17	10	120	2.0	3090 0017 1000 0020
21	13	156	2.0	3090 0021 1300 0020
24	16	192	2.0	3090 0024 1600 0020
28	19	228	2.0	3090 0028 1900 0020
35	25	300	2.0	3090 0035 2500 0020

Multipurpose flexible tube with high resistance to weathering, many chemicals, higher temperatures and sunlight. It is particularly suitable as a main supply of unlubricated compressed air or for backbone distributions in individual applications. It is also used to supply air to cylinders of larger diameters.

Tube PU polyurethan antistatic

Technical data:
Standard tube color is black.
Temperature range: -30˚C to +80˚C.
The length in the package is 50 m.

Outside diameter ∅ D mm	Inside diameter ∅ D mm	Min. bending radius	Max. pressure at 20˚C [MPa]	Order codes
4	2,5	9	3,4	PUN 4X2,5 ANTISTAT
6	3,9	15	3,3	PUN 6X4 ANTISTAT
8	5,7	28	2,2	PUN 8X6 ANTISTAT
10	7,5	35	2,2	PUN 10X8 ANTISTAT
12	9	50	2,2	PUN 12X9 ANTISTAT

With temperature the pressure changes as follows:

∅ D	20˚C	30˚C	40˚C	50˚C	60˚C	70˚C	80˚C
4	100%	79%	71%	59%	47%	45%	41%
6	100%	82%	73%	61%	48%	42%	36%
8	100%	91%	73%	71%	64%	55%	45%
10	100%	91%	73%	64%	55%	45%	44%
12	100%	73%	68%	54%	55%	41%	40%

Electrically conductive special tubes are used where it is necessary to prevent the formation of a static electric charge. They are used mainly in the production of electronic components, in paint shops, in environments with a risk of explosion, in mining. The tubes are made of polyether polyurethane, are highly antistatic, have a surface resistance of <$10^6\Omega$ and have very good UV resistance. The tube can also be used for vacuum, while the minimum bending radius must be increased by approx. 20%. If the tube is used in environments with a risk of explosion, it is necessary to observe the conductivity of the entire system, i.e. use metal fittings with metal sealing rings.

Notice

More information such as safety instructions and manufacturer's declaration can be found on our website www.sappv.cz/r/f12e

Metal protective tube

Outside diameter ∅ D mm	Inside diameter ∅ d mm	Suitable for tube diameter ∅ D/d mm	Order codes
10	8	6/4	3080 0006 0000 0000
13	10	8/9	3080 0008 0000 0000
16	13	10/8	3080 0010 0000 0000
19	16	12/10 a 12/9	3080 0012 0000 0000
21	18	15/12	3080 0015 0000 0000

Metal protective tubes are used where external influences could damage the surface of plastic tubes, for example:
- spark protection during welding
- protection against flying chips during machining
- crush protection, etc.

Material: galvanized steel

Rotary coupling

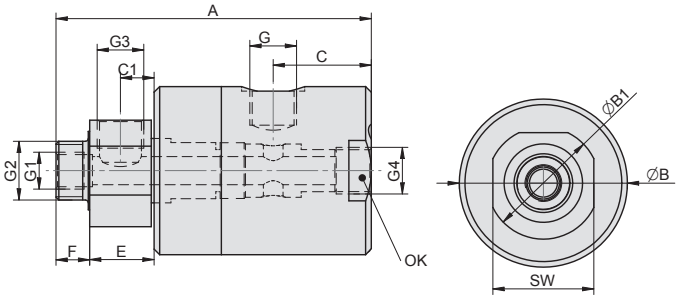

Working pressure	0.6 MPa
Min. pressure	0 MPa
Max. pressure	1.0 MPa
Temperature range	-20˚C to +80˚C
Working medium	modified compressed air
Cross section	DN 6 for G 1/8“, DN 12 for G 3/8“
Working revolutions	0 to 120 rpm, both directions

Materials
- body: dural, hard anodized
- shaft: stainless steel 1.4021
- gaskets: NBR

Type	A	B	B1	C	C1	E	F	G	G1	G2	G3	G4	OK	SW	Weight	Order codes
straight with branch	81.5	45	30	22.5	9.5	18.5	12	G1/8“	M8	G1/4“	G1/8“	G1/8“	—	27	0.35	2770 0300 0600 0001
	109.5	60	40	32	12	23	12	G3/8“	G1/4“	G1/2“	G3/8“	G3/8“	56	36	0.90	2770 0300 1000 0001
elbow with branch	72	45	30	12.5	9.5	18.5	12	G1/8“	M8	G1/4“	G1/8“	—	—	27	0.31	2770 0200 0600 0001
	99.5	60	40	24	12	23	12	G3/8“	G1/4“	G1/2“	G3/8“	—	—	36	0.78	2770 0200 1000 0001
elbow	72	45	30	12.5	—	18.5	12	G1/8“	—	G1/4“	—	—	—	27	0.32	2770 0100 0600 0001
	91.5	60	40	24	—	15	12	G3/8“	—	G1/2“	—	—	—	36	0.83	2770 0100 1000 0001

Quick coupling type 21

The body is with a non--return valve as a standard, the plug is through.

Technical data:
Working pressure: 0 to 3.5 MPa
Temperature range: -20°C to +100°C
Flow: 700 l/min, cross section 5 mm
Material - body: body - brass, sleeve - brass, balls and spring - stainless steel, seals - NBR
Material - plug: brass
Medium: air

Body with external thread

Thread	Order codes
G1/8“	3930 0211 0104 0000
G1/4“	3930 0211 0106 0000
G3/8“	3930 0211 0108 0000

Body with internal thread

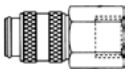

Thread	Order codes
G1/8“	3930 0211 0204 0000
G1/4“	3930 0211 0206 0000
G3/8“	3930 0211 0208 0000

Body with push-on fitting

∅ mm	Order codes
6/4	3930 0211 1032 0000
8/6	3930 0211 1033 0000

Body with push-on fitting with tube guard

∅ mm	Order codes
6/4	3930 0211 1232 0000
8/6	3930 0211 1233 0000

Bulkhead body with tube socket

∅ mm	Order codes
4	3930 0211 2174 0000
6	3930 0211 2176 0000
8	3930 0211 2178 0000

Bulkhead body with push-on fitting

∅ mm	Order codes
6/4	3930 0211 1132 0000
8/6	3930 0211 1133 0000

Body with tube socket

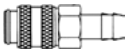

∅ mm	Order codes
4	3930 0211 2074 0000
6	3930 0211 2076 0000
8	3930 0211 2078 0000
9	3930 0211 2079 0000
10	3930 0211 2080 0000

Plug with external thread

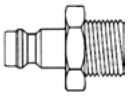

Thread	Order codes
G1/8“	3930 0212 0104 0000
G1/4“	3930 0212 0106 0000
G3/8“	3930 0212 0108 0000

Plug with internal thread

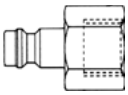

Thread	Order codes
G1/8“	3930 0212 0204 0000
G1/4“	3930 0212 0206 0000
G3/8“	3930 0212 0208 0000

Plug with tube socket

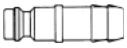

∅ mm	Order codes
4	3930 0212 2074 0000
6	3930 0212 2076 0000
8	3930 0212 2078 0000
9	3930 0212 2079 0000
10	3930 0212 2080 0000

Plug with push-on fitting with tube guard

∅ mm	Order codes
6/4	3930 0212 1232 0000
8/6	3930 0212 1233 0000

Plug with push-on fitting

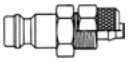

∅ mm	Order codes
6/4	3930 0212 1032 0000
8/6	3930 0212 1033 0000

Bulkhead plug with push-on fitting

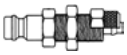

∅ mm	Order codes
6/4	3930 0212 1132 0000
8/6	3930 0212 1133 0000

Bulkhead plug with tube socket

∅ mm	Order codes
4	3930 0212 2174 0000
6	3930 0212 2176 0000
8	3930 0212 2178 0000
9	3930 0212 2179 0000

For dimensions, check our website sappv.cz/r/f14e

Quick coupling type 26

The body is with a non--return valve as a standard, the plug is through.

Technical data:
Working pressure: 0 to 3.5 MPa
Temperature range: -20°C to +100°C
Flow: 1500 l/min, cross section 7.2 mm
Material - body: body - brass, sleeve - brass, balls and spring - stainless steel, seals - NBR
Material - plug: brass
Medium: air

Body with external thread

Thread	Order codes
G1/8“	3930 0261 0104 0000
G1/4“	3930 0261 0106 0000
G3/8“	3930 0261 0108 0000
G1/2“	3930 0261 0110 0000

Body with internal thread

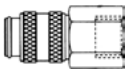

Thread	Order codes
G1/4“	3930 0261 0206 0000
G3/8“	3930 0261 0208 0000
G1/2“	3930 0261 0210 0000

Body with push-on fitting

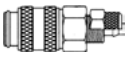

∅ mm	Order codes
8/6	3930 0261 1033 0000
10/8	3930 0261 1034 0000
12/9	3930 0261 1035 0000

For dimensions, check our website sappv.cz/r/f15e

Body with push-on fitting with tube guard

∅ mm	Order codes
8/6	3930 0261 1233 0000
10/8	3930 0261 1234 0000
12/9	3930 0261 1235 0000

Body with tube socket

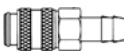

∅ mm	Order codes
6	3930 0261 2076 0000
8	3930 0261 2078 0000
9	3930 0261 2079 0000
10	3930 0261 2080 0000
13	3930 0261 2083 0000

Quick coupling type 26 - continued

Plug with external thread

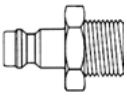

Thread	Order codes
G1/8“	3930 0262 0104 0000
G1/4“	3930 0262 0106 0000
G3/8“	3930 0262 0108 0000
G1/2“	3930 0262 0110 0000

Plug with internal thread

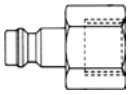

Thread	Order codes
G1/8“	3930 0262 0204 0000
G1/4“	3930 0262 0206 0000
G3/8“	3930 0262 0208 0000
G1/2“	3930 0262 0210 0000

See page 10-15 for technical data

For dimensions, check our website sappv.cz/r/f15e

Plug with push-on fitting with tube guard

∅ mm	Order codes
6/4	3930 0262 1232 0000
8/6	3930 0262 1233 0000
10/8	3930 0262 1234 0000
12/9	3930 0262 1235 0000

Plug with push-on fitting

∅ mm	Order codes
6/4	3930 0262 1032 0000
8/6	3930 0262 1033 0000
10/8	3930 0262 1034 0000
12/9	3930 0262 1035 0000

Bulkhead plug with tube socket

∅ mm	Order codes
6	3930 0262 2176 0000
8	3930 0262 2178 0000
10	3930 0262 2180 0000

Plug with tube socket

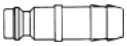

∅ mm	Order codes
4	3930 0262 2074 0000
6	3930 0262 2076 0000
8	3930 0262 2078 0000
9	3930 0262 2079 0000
10	3930 0262 2080 0000
13	3930 0262 2083 0000

Plug with tube socket with non-return valve

∅ mm	Order codes
6	3930 0262 3076 0000
8	3930 0262 3078 0000
9	3930 0262 3079 0000
10	3930 0262 3080 0000
13	3930 0262 3083 0000

Quick coupling type 27

The body is with a non--return valve as a standard, the plug is through.

Technical data:
Working pressure: 0 to 3.5 MPa
Temperature range: -20°C to +100°C
Flow: 3300 l/min, cross section 10.5 mm
Material - body: body - brass, sleeve - brass, balls and spring - stainless steel, seals - NBR
Material - plug: brass
Medium: air

Body with external thread

Thread	Order codes
G1/4“	3930 0271 0106 0000
G3/8“	3930 0271 0108 0000
G1/2“	3930 0271 0110 0000
G3/4“	3930 0271 0112 0000

Body with internal thread

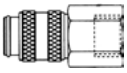

Thread	Order codes
G1/4“	3930 0271 0206 0000
G3/8“	3930 0271 0208 0000
G1/2“	3930 0271 0210 0000
G3/4“	3930 0271 0212 0000

Body with tube socket

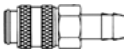

∅ mm	Order codes
6	3930 0271 2076 0000
8	3930 0271 2078 0000
9	3930 0271 2079 0000
10	3930 0271 2080 0000
13	3930 0271 2083 0000
16	3930 0271 2086 0000
19	3930 0271 2089 0000

Plug with external thread

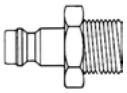

Thread	Order codes
G1/4“	3930 0272 0106 0000
G3/8“	3930 0272 0108 0000
G1/2“	3930 0272 0110 0000
G3/4“	3930 0272 0112 0000

Plug with internal thread

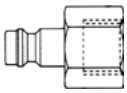

Thread	Order codes
G1/4“	3930 0272 0206 0000
G3/8“	3930 0272 0208 0000
G1/2“	3930 0272 0210 0000
G3/4“	3930 0272 0212 0000

Plug with tube socket

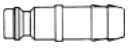

∅ mm	Order codes
6	3930 0272 2076 0000
8	3930 0272 2078 0000
9	3930 0272 2079 0000
10	3930 0272 2080 0000
13	3930 0272 2083 0000
16	3930 0272 2086 0000
19	3930 0272 2089 0000

For dimensions, check our website sappv.cz/r/f16e

Technical data:
Max. pressure: vacuum to 1.6 MPa
Temperature range: -15°C to +65°C
Tube material: aluminium alloy EN AW 6060, powder coating
Coupling material: HR-polymer PA6, seals NBR
Medium: air, liquids and gases according to compatibility with fitting and tube materials

The QUICK LINE distribution system brings a number of advantages in the solution of compressed air distribution. It is a system of quality materials with excellent resistance to corrosion and shocks, which can be implemented quickly, efficiently and without the need to purchase other equipment. It can be used to implement complex distributions, thanks to a wide range of different sizes and distribution elements.

Technical parameters, dimensions, instructions, examples of implementations, and other information can be found on our website at sappv.cz/r/f17e

Tube - length 4m, blue color

∅ mm	Order codes
16	RQL TUAL 4016S
20	RQL TUAL 4020S
25	RQL TUAL 4025S
32	RQL TUAL 4032S
40	RQL TUAL 4040S
50	RQL TUAL 4050S
63	RQL TUAL 4063S

Tube - length 5,8m, blue color

∅ mm	Order codes
80	RQL TUAL 080S
110	RQL TUAL 110S

Branch tube, blue color

∅ mm	Order codes
16	RQL SCI 016
20	RQL SCI 020
25	RQL SCI 025

Straight coupling

∅ mm	Order codes
16	RQL MAPA 016
20	RQL MAPA 020
25	RQL MAPA 025
32	RQL MAPA 032
40	RQL MAPA 040
50	RQL MAPA 050
63	RQL MAPA 063

Straight sliding copuling

∅ mm	Order codes
32	RQL MASPA 032
40	RQL MASPA 040
50	RQL MASPA 050
63	RQL MASPA 063

Elbow 90°

∅ mm	Order codes
16	RQL GO90PA 016
20	RQL GO90PA 020
25	RQL GO90PA 025
32	RQL GO90PA 032
40	RQL GO90PA 040
50	RQL GO90PA 050
63	RQL GO90PA 063

Elbow 45°

∅ mm	Order codes
20	RQL GO45PA 020
25	RQL GO45PA 025
32	RQL GO45PA 032
40	RQL GO45PA 040
50	RQL GO45PA 050
63	RQL GO45PA 063

End cap

∅ mm	Order codes
16	RQL CAPA 016
20	RQL CAPA 020
25	RQL CAPA 025
32	RQL CAPA 032
40	RQL CAPA 040
50	RQL CAPA 050
63	RQL CAPA 063

Elbow 90° with male thread

∅ mm	Thread	Order codes
20	R1/2“	RQL GO90PM 020048
25	R1/2“	RQL GO90PM 025048
25	R3/4“	RQL GO90PM 025068

Straight reduction

∅1 mm	∅2 mm	Order codes
25	20	RQL RIDPA 025020
32	25	RQL RIDPA 032025
40	25	RQL RIDPA 040025
40	32	RQL RIDPA 040032
50	40	RQL RIDPA 050040

Union, male thread

∅ mm	Thread	Order codes
16	R1/2“	RQL MNPA 016048
20	R1/2“	RQL MNPA 020048
20	R3/4“	RQL MNPA 020068
25	R1/2“	RQL MNPA 025048
25	R3/4“	RQL MNPA 025068
25	R1“	RQL MNPA 025088
32	R1“	RQL MNPA 032088
32	R1 1/4“	RQL MNPA 032108
40	R1“	RQL MNPA 040088
40	R1 1/4“	RQL MNPA 040108
40	R1 1/2“	RQL MNPA 040128
50	R1 1/2“	RQL MNPA 050128
50	R2“	RQL MNPA 050168
63	R2“	RQL MNPA 063168

Tee

∅ mm	Order codes
16	RQL TEPA 016
20	RQL TEPA 020
25	RQL TEPA 025
32	RQL TEPA 032
40	RQL TEPA 040
50	RQL TEPA 050
63	RQL TEPA 063

Threaded tee with female thread

∅ mm	Thread	Order codes
20	R1/2“	RQL TPPA 020048
25	R1/2“	RQL TPPA 025048

STRÁNSKÝ A PETRŽÍK

Reducing tee

∅1 mm	∅2 mm	Order codes
20	16	RQL TRPA 020016
25	16	RQL TRPA 025016
25	20	RQL TRPA 025020
32	20	RQL TRPA 032020
32	25	RQL TRPA 032025
40	20	RQL TRPA 040020
40	25	RQL TRPA 040025
40	32	RQL TRPA 040032
50	20	RQL TRPA 050020
50	25	RQL TRPA 050025
50	32	RQL TRPA 050032
50	40	RQL TRPA 050040
63	20	RQL TRPA 063020
63	25	RQL TRPA 063025
63	40	RQL TRPA 063040
63	50	RQL TRPA 063050

Ball valve with male thread

∅ mm	Thread	Order codes
16	R1/2“	RQL VAM 016048
20	R1/2“	RQL VAM 020048
25	R3/4“	RQL VAM 025068

Ball valve with female thread

∅ mm	Thread	Order codes
16	G1/2“	RQL VAF 016048
20	G1/2“	RQL VAF 020048
25	G3/4“	RQL VAF 025068

Compensator hose

∅ mm	Order codes
20	RQL FLEX 020
25	RQL FLEX 025
32	RQL FLEX 032
40	RQL FLEX 040
50	RQL FLEX 050
63	RQL FLEX 063

Spigot with male thread

∅ mm	Thread	Order codes
16	R3/8“	RQL PUNM 016038
20	R1/2“	RQL PUNM 020048
20	R3/4“	RQL PUNM 020068
25	R1“	RQL PUNM 025088
32	R1 1/4“	RQL PUNM 032108
40	R1 1/2“	RQL PUNM 040128
50	R2“	RQL PUNM 050168
63	R2“	RQL PUNM 063168
80	R3“	RQL PUNM 080248

Branch with pipe outlet

∅1 mm	∅2 mm	Order codes
25	16	RQL DERPA 025016
25	20	RQL DERPA 025020
32	16	RQL DERPA 032016
32	20	RQL DERPA 032020
40	16	RQL DERPA 040016
40	20	RQL DERPA 040020
40	25	RQL DERPA 040025
50	16	RQL DERPA 050016
50	20	RQL DERPA 050020
50	25	RQL DERPA 050025
63	20	RQL DERPA 063020
63	25	RQL DERPA 063025
63	32	RQL DERPA 063032
80	20	RQL DERPA 080020
80	25	RQL DERPA 080025
80	32	RQL DERPA 080032
110	25	RQL DERPA 110025
110	32	RQL DERPA 110032

Branch with female thread outlet

∅ mm	Thread	Order codes
25	G1/2“	RDIR DERFF 025048
32	G1/2“	RDIR DERFF 032048
40	G1/2“	RDIR DERFF 040048
40	G3/4“	RDIR DERFF 040068
50	G1/2“	RDIR DERFF 050048
50	G3/4“	RDIR DERFF 050068
63	G1/2“	RDIR DERFF 063048
63	G3/4“	RDIR DERFF 063068
63	G1“	RDIR DERFF 063088
80	G1/2“	RDIR DERFF 080048
80	G3/4“	RDIR DERFF 080068
80	G1“	RDIR DERFF 080088
110	G3/4“	RDIR DERFF 110068
110	G1“	RDIR DERFF 110088

Bracket with threaded insert

∅ mm	Order codes
16	RDIR FEM8 016CF
20	RDIR FEM8 020CF
25	RDIR FEM8 025CF
32	RDIR FEM8 032CF
40	RDIR FEM8 040CF
50	RDIR FEM8 050CF
63	RDIR FEM8 063CF
80	RDIR FEM8 080CF
110	RDIR FEM8 110CF

Single port manifold

Thr. 1	Thr. 2	Order codes
G1/2“	G1/2“	RDIR APMAL 048048

Double ports manifold *

Thr. 1	Thr. 2	Order codes
G1/2“	2x G1/2“	RAP LAL 048
G3/4“	2x G1/2“	RAP LAL 068

Three ports manifold *

Thr. 1	Thr. 2	Order codes
G1/2“	3x G1/2“	RDIR APFRLAL 48048

Four ports manifold *

Thr. 1	Thr. 2	Order codes
G1/2“	4x G1/2“	RDIR APLAL 048048
G3/4“	2x G1/2“ + 2x G3/4“	RDIR APLAL 068068

Five ports manifold *

Thr. 1	Thr. 2	Order codes
G3/4“	3x G1/2“ + 2x G3/4“	RDIR PMUAL 120

Seven ports manifold *

Thr. 1	Thr. 2	Order codes
G3/4“	5x G1/2“ + 2x G3/4“	RDIR PMUAL 200

Straight seven ports manifold

Thr. 1	Thr. 2	Order codes
2x G3/4“	5x G3/8“	RAP LALL MUL 068038
2x G3/4“	5x G1/2“	RAP LALL MUL 068048

The connections marked * have even a hidden threaded hole G1/4“, which is normally blinded and which can then be used to drain condensate.

ELECTRIC ACTUATORS - CONTENTS

Electric actuators rectilinear with ball screw, 1E1 series, ISO 15552. 11-2

Electric actuators with a ball screw without motor, MEQI series, ISO 15552 11-6

Electric actuators with belt drive without motor, METB series 11-7

LINEAR ELECTRIC ACTUATORS WITH BALL SCREW SERIES 1E1 ISO 15552

STRÁNSKÝ A PETRŽÍK

The electric actuator is designed on the principle of converting rotary motion to rectilinear by means of a ball screw and a nut. Piston rod of the electric actuator is locked against accidental rotation. Radial load must correspond to the permitted values according to the charts. If load exceeds the permissible values, it must be secured by external guiding means. Profile of the pipe allows attachment of proximity switches using T-grooves. The wall for the use of proximity switches is marked on the dimensional drawings, and this surface can be oriented differently on request. The complete electric actuator offers precise positioning, defining of precise travel speeds, acting with precise force and the like. Compared to pneumatic cylinders, the electric actuator offers an increase in accuracy in all the listed physical parameters and it does not require an additional drive medium (compressed air), it is sufficient only with electrical energy. The mentioned electric actuators can even work at very low speeds, or can maintain the load for a limited time even in a static position.

Model	1E1 50	
	direct connection	side connection
Positioning repeatability [mm]	0,02	
Minimum step of travel [mm]	0,1	
Ball screw lead [mm]	5	
Ball screw [mm]	C7 ∅16	
Maximum speed [mm.s^{-1}]	100	
Maximum thrust force [N]	1400	
Gear ratio	1:3,6	
Maximum motor output [W]	200	
Maximum motor rotational speed [rpm]	3000, 4000 for a short time	
Motor voltage [V]	24	
Maximum continuous current [A]	5	
Recommended minimum power source [W]	200	
Stroke [mm]	50 to 800	100 to 800
Weight 0 mm stroke [kg]	5,3	7,1
Weight add. per 1 mm stroke [kg]	0,008	
Recommended proximity switch	KT-50, RZT7, MZT8	

Order codes

1E1 05 03 1 50 0100 00

Ball screw lead	
05	screw 5mm/rot.

Motor type	
00	without motor
03	BLDC

Motor connection	
0	without motor
1	direct
2	side

Size acc. to ISO15552	
50	ø50 mm

Stroke / Repair kit	
xxxx	mm of stroke 50 to 800 e.g.: 0100 = stroke 100 mm
9999	repair kit

11

Construction / materials

- caps: dural, anodized
- body: drawn dural profile, anodized
- piston rod: grounded round steel bar CK45 with hard chrome plated surface

For the variant without a motor, it is necessary to contact our technical department in order to design the corresponding connection flange for the intended type and size of the motor.

For information on the electrical circuit, control and programming, please contact our technical department.

Static and dynamic characteristics

Dependence of force on current at speed v = 30 mm.s^{-1}

Direct motor connection

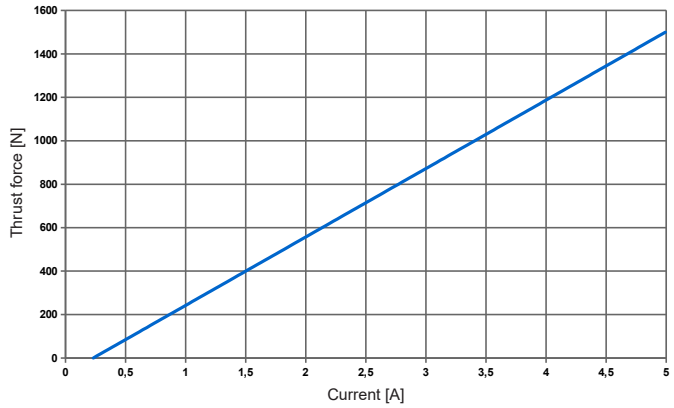

Side motor connection

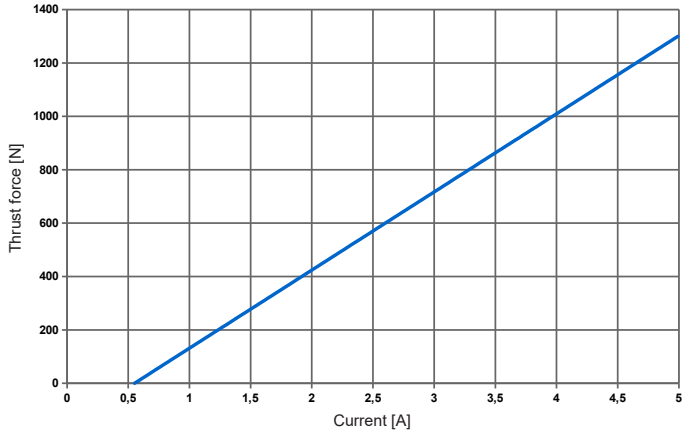

Dependence of the force on the speed at a current of I = 3 A

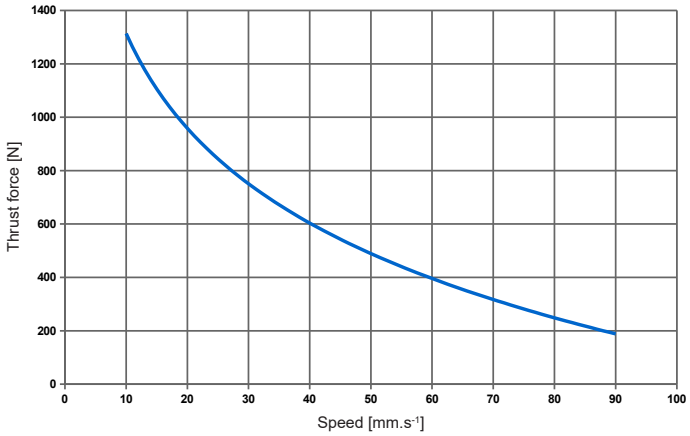

Dependence of permissible force on stroke

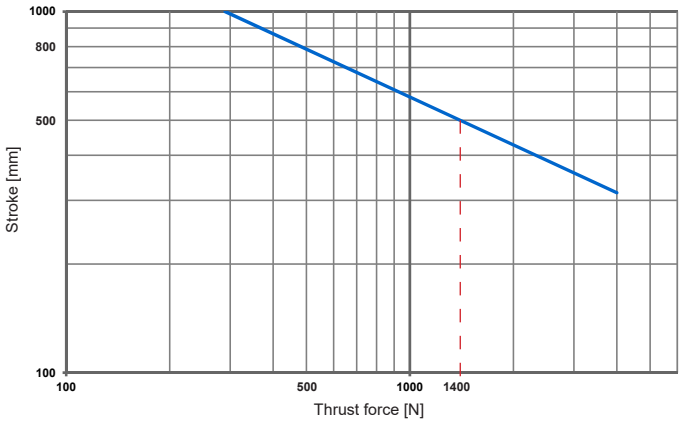

Maximum permissible side load depending on the stroke at maximum extension

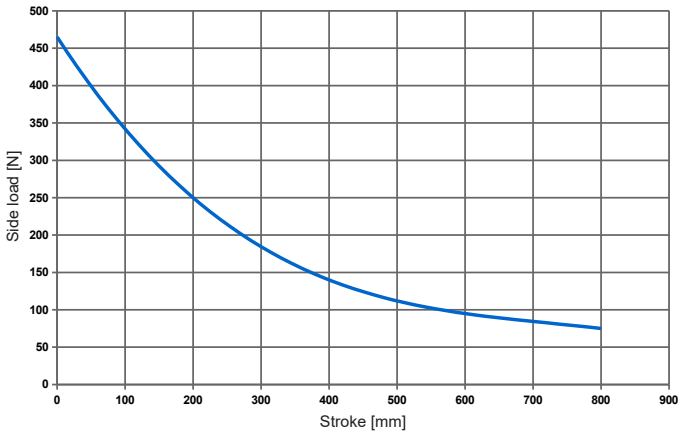

Dimensions

Direct motor connection

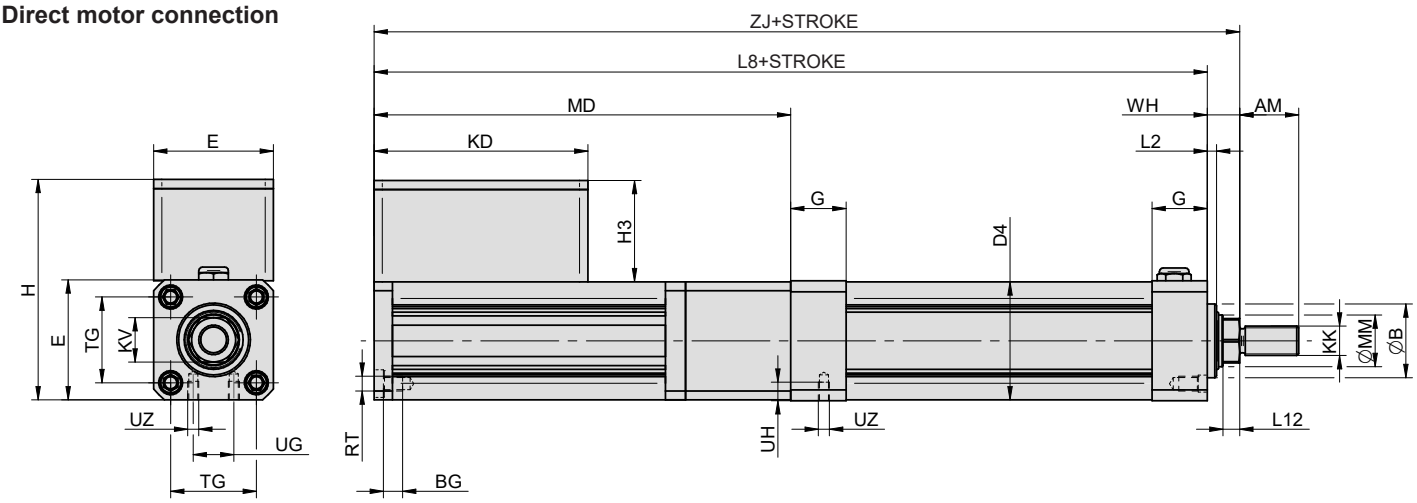

Size	AM	B	BG	D4	E	G	H	H3	KD	KK	KV	L2	L8	L12	MD	MM	RT	TG	UG	UH	UZ	WH	ZJ
50	32	40	10,5	64	65	30	119	55	116	M16X1,5	24	5	358	9	226	28	M8	46,5	22	10	M6	17,5	375,5

Side motor connection

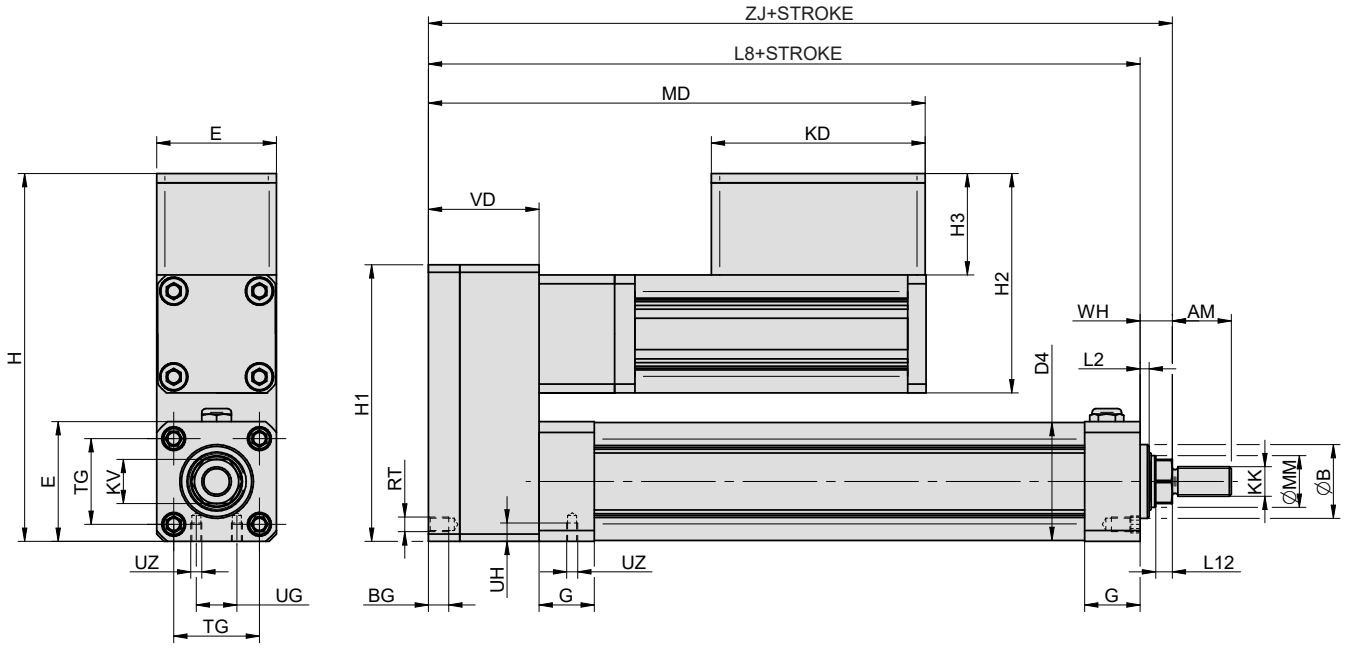

Size	AM	B	BG	D4	E	G	H	H1	H2	H3	KD	KK	KV	L2	L8	L12	MD	MM	RT	TG	UG	UH	UZ	VD	WH	ZJ
50	32	40	17	64	65	30	204	150	119	55	116	M16x1,5	24	5	196	9	274	28	M8	46,5	22	10	M6	64	17,5	214

Mounting accessories

Since the connection dimensions of the electric drive correspond to the ISO 15552 standard, it is possible to use all common mounting accessories for pneumatic cylinders for fastening.

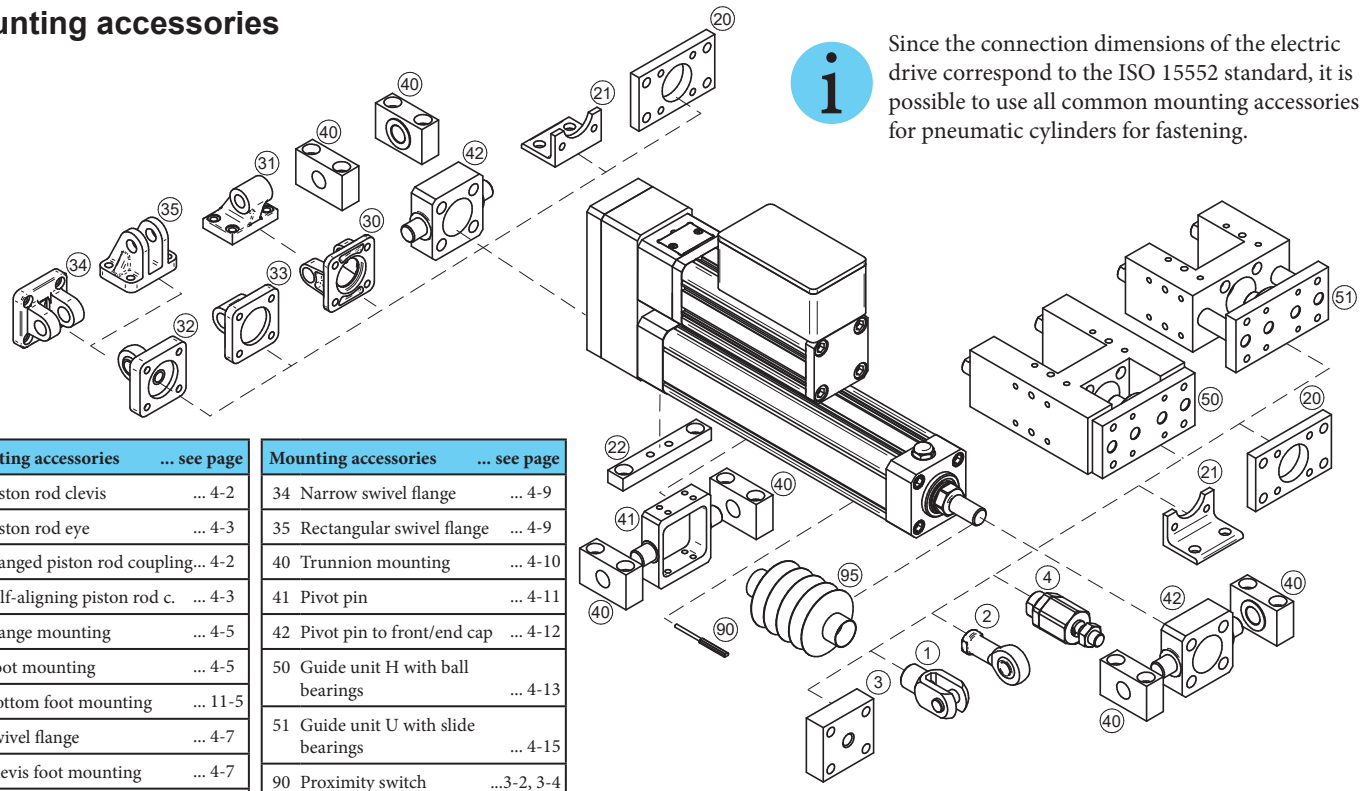

Mounting accessories	... see page
1 Piston rod clevis	... 4-2
2 Piston rod eye	... 4-3
3 Flanged piston rod coupling	... 4-2
4 Self-aligning piston rod c.	... 4-3
20 Flange mounting	... 4-5
21 Foot mounting	... 4-5
22 Bottom foot mounting	... 11-5
30 Swivel flange	... 4-7
31 Clevis foot mounting	... 4-7
32 Swivel flange with spherical bearing	... 4-8
33 Swivel flange	... 4-8

Mounting accessories	... see page
34 Narrow swivel flange	... 4-9
35 Rectangular swivel flange	... 4-9
40 Trunnion mounting	... 4-10
41 Pivot pin	... 4-11
42 Pivot pin to front/end cap	... 4-12
50 Guide unit H with ball bearings	... 4-13
51 Guide unit U with slide bearings	... 4-15
90 Proximity switch	...3-2, 3-4
95 Piston rod protective cover	... 4-4

For reliable operation, it is necessary that the body of the electric drive is fixed with a firm attachment in two places (e.g. foot and bottom foot, or front flange and bottom foot).

Bottom foot mounting

Supply contains:
1 pc bottom foot mounting
2 pcs screws

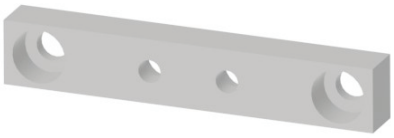

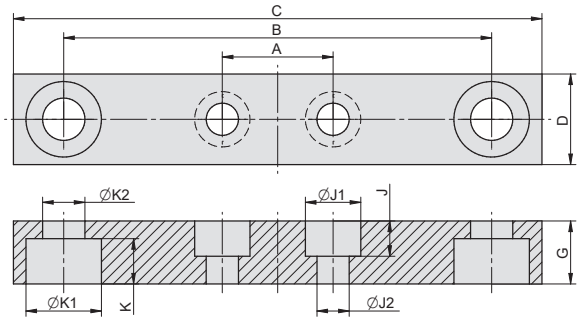

Size	A	B	C	D	G	J	J1	J2	K	K1	K2	Weight	Order codes
50	22	85	105	18	12,5	7	11	6,4	9	15	8,4	0,06	2115 2100 0050 0000

Control unit

The integrated control unit can work completely independently after connecting to a power source. It is possible to program up to 200 program steps, in which you can easily control speeds, absolute and relative positioning, set the output, work with 5 inputs, compare values and branch the program according to the result of the comparison. It is possible to communicate with the unit via the RS485 bus, which can be connected, for example, to the USB port of a computer using a converter. An application for communication with the unit is available for the Windows operating system, which can be used to easily control the unit, set its parameters and create or modify the program.
RS232 bus can be used for simple continuous display of unit status.

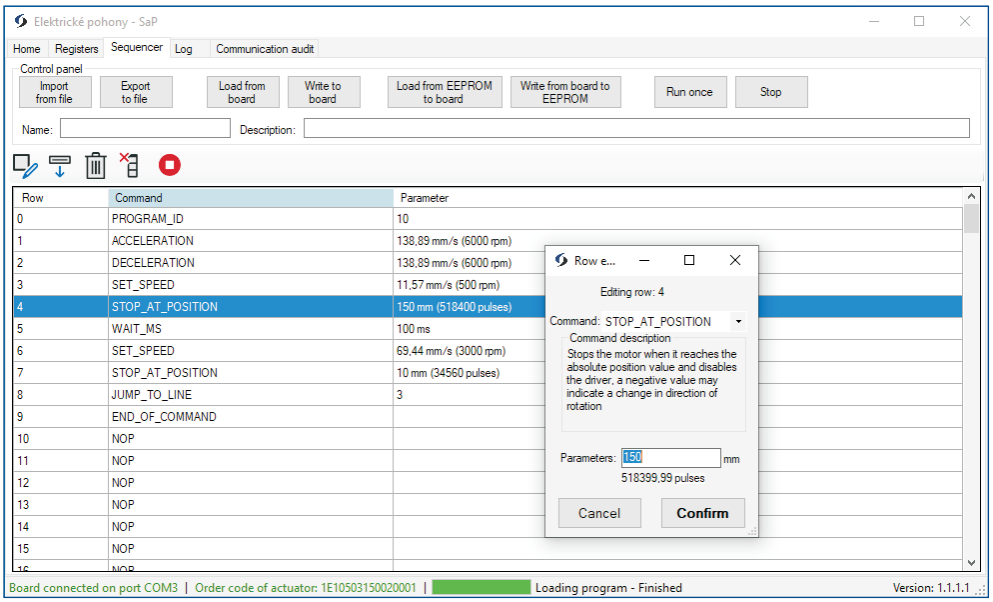

11

ELECTRIC ACTUATORS WITH BALL SCREW WITHOUT MOTOR MEQI SERIES ISO 15552

STRÁNSKÝ A PETRŽÍK

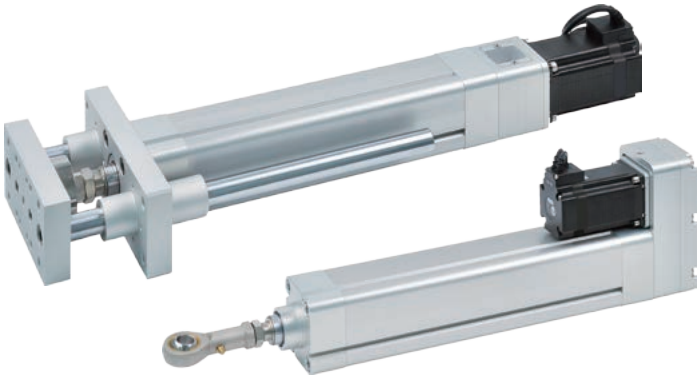

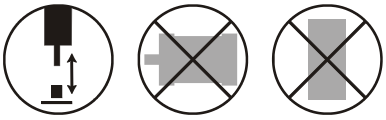

Main advantages:

- without motor - preferred type can be used - servo or stepper motor
- sliding out piston rod with anti-rotation lock
- integrated slide guide
- two motor position options
- ideal as a pneumatic cylinder replacement due to the same mounting dimensions, according to ISO 15552

Model	MEQI 50			MEQI 63		
Positioning repeatability [mm]	± 0.02			± 0.02		
Ball screw lead [mm]	5	10	20	5	10	20
Maximum speed [mm.s^{-1}] for servo motor / for stepper motor	250 / 125	500 / 250	1000 / 500	250 / 125	500 / 250	1000 / 500
Horizontal work load [kg]* for servomotor	110	88	40	110	88	40
Vertical work load [kg]* for servomotor	33	22	10	33	22	10
Rated thrust [N] for servomotor / for stepper motor	1560 / 1120	780 / 560	390 / 280	1560 / 1120	780 / 560	390 / 280
Possible stroke [mm]	100 to 600, multiples of 50			100 to 800, multiples of 50		
Ball screw [mm]	C7 ∅16			C7 ∅20		
Anti-rotation tolerance [°]	± 0.4			± 0.4		

*) An external guide is necessary to support the load. The operating speed under work load is less than maximum speed.

Order codes

P MEQI - 50 L05 - 200 - BC - M40 B - A2 D

Model	
50	MEQI 50
63	MEQI 63

Ball screw lead	
05	5 mm
10	10 mm
20	20 mm

Motor position	
BC	in axes
BA	above

Motor brand	
M40	Mitsubishi, servo 400W
P40	Panasonic, servo 400W
Y40	Yaskawa, servo 400W
T40	Delta, servo 400W
S56	Mindman, stepper □56

Brake	
	no brake
B	with brake

Note: brake is recommended for vertical use

Limit sensor	
	no sensor
A1	1 pc
A2	2 pcs
A3	3 pcs

Stroke	
xxx	stroke in mm 100 to 600 (MEQI 50), 100 to 800 (MEQI 63), (always multiples of 50) eg. 100 = stroke 100 mm

Sensor type	
D	2-wire
N	NPN
P	PNP

Rod bending offset under radial load

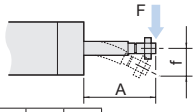

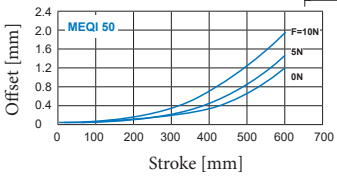

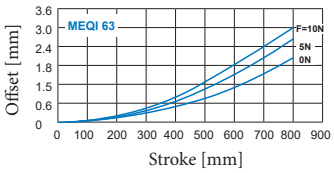

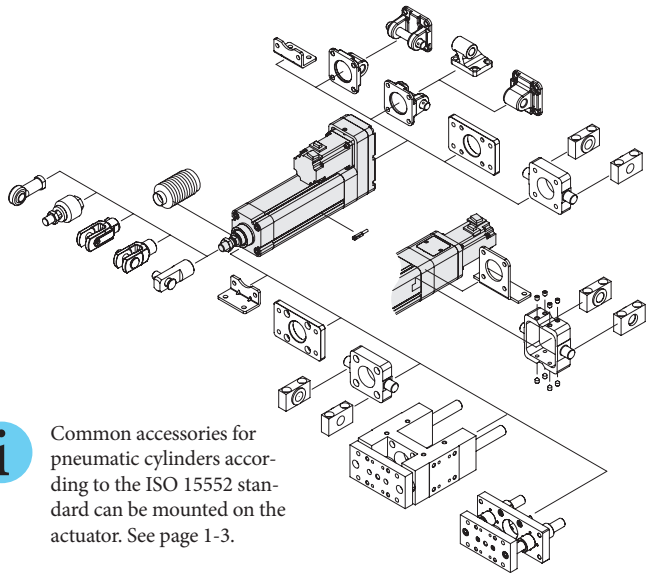

Common accessories for pneumatic cylinders according to the ISO 15552 standard can be mounted on the actuator. See page 1-3.

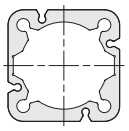

The actuator profile is symmetrical and closed.

Technical parameters, dimensions and other information can be found on our website sappv.cz/r/x02e

ELECTRIC ACTUATORS WITH BELT TRANSMISSION WITHOUT MOTOR METB SERIES

This universal actuator with toothed belt transmission is designed for individual automation. Connect the actuator to the control unit you are used to and you get an electric linear actuator with a wide range of applications. The cover strip is made of stainless steel and the carriage has a seal against the ingress of dirt into the interior. Standard position sensors can be used with this actuator to obtain feedback for further control.

Operating temperature	-5°C to +50°C

Model	42	55	80
Positioning repeatability[mm]	± 0.05		
Maximum speed [m.s^{-1}]	3		
Possible stroke [mm]	100 to 6000		
Pulley drive ratio [mm]	90	120	160
Number of teeth of pulley	18	24	32
Belt width [mm]	12	16	25
Maximum rpm [g.min^{-1}]	2000	1500	1150

Model	42	55	80
Max. load Fx [N]	460	820	1650
Max. load Fy and Fz [N]	1560	1850	4500
Max. moment Mx [Nm]	20	25	80
Max. moment My and Mz [Nm]	55	120	450
Max. radial load on input shaft [N]	220	300	300
No load torque [Nm]	>0.1	>0.5	>0.9
Weight 0 mm stroke [kg]	1.6	4.4	6
Weight added per 100 mm stroke [kg]	0.25	0.37	0.90

Order codes

PMETB 42 0800 M12 L

Model	
42	METB-42
55	METB-55
80	METB-80

Stroke	
xxxx	stroke in mm eg. 0100 = stroke 100 mm (in the range of 100 to 6000 mm)

Shaft versions		For model
F08	female shaft, Ø8	METB-42
M12	male shaft, Ø12	
D12	double male shaft, Ø12	
F08	female shaft, Ø8	METB-55
M16	male shaft, Ø16	
D16	double male shaft, Ø16	
F19	female shaft, Ø19	METB-80
M19	male shaft, Ø19	
D19	double male shaft, Ø19	

Male shaft *	
L	left shaft
R	right shaft

*) Applies only to the connections M12, M16 and M19

Motor connection

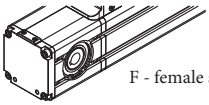

F - female shaft

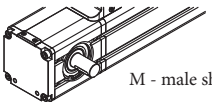

M - male shaft

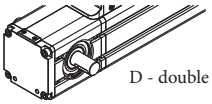

D - double male shaft

Features

- transmission of movement by ATL5 toothed belt
- integrated guide with two guide blocks
- body is from drawn duralumin profile, hard anodized
- stainless steel protection band

Technical parameters, dimensions and other information can be found on our website sappv.cz/r/x03e

Sensor switch installation

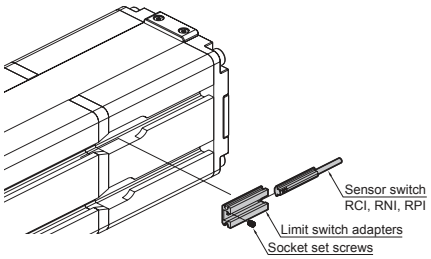

For models METB-42 and 55, the sensor is attached directly to the actuator body, for model METB-80, it is necessary to use an adapter with order code PETB80-3.

Order code	Page
1E1...	11-2
10101...	1-4
10105...	1-66
10106...	1-66
10110...	1-8
10115...	1-44
10122...	1-12
10123...	1-12
10201...	1-2
1021...	1-10
10301...	1-6
11001...	1-18
11005...	1-70
11006...	1-70
11101...	1-20
11201...	1-22
11301...	1-26
11401...	1-16
12101...	1-14
12105...	1-68
12106...	1-68
12501...	1-32
12505...	1-72
12506...	1-72
12517...	1-54
15...	1-34
16...	1-42
17...	1-28
180...	2-14
182...	2-17
2000 25...	6-14, 6-17
2100 90...	2-4, 2-6
2100 91...	2-2
2100 92...	2-8
2101 0100...	4-2
2101 0200...	4-3
2101 0300...	4-2
2101 2000...	4-5
2101 2100...	4-5
2101 2200...	4-6
2101 2300...	4-6
2101 3000...	4-7
2101 3100...	4-7
2101 3200...	4-8
2101 3300...	4-8
2101 3400...	4-9
2101 3500...	4-9
2101 4000...	4-10
2101 4100...	4-11
2101 4101...	4-11
2101 4200...	4-12
2101 5000...	4-13
2101 5100...	4-15
2101 8000...	4-12
2102 4100...	4-12
2102 5000...	4-13
2102 5100...	4-15
2110 0100...	4-2
2110 0200...	4-3
2110 0300...	4-2
2110 0400...	4-3
2110 2000...	4-20
2110 2100...	4-20
2110 3000...	4-20
2110 4000...	4-10
2110 5000...	4-21
2110 5100...	4-22

Order code	Page
2113 2100...	4-25
2113 3000...	4-25
2113 4200...	4-25
2114 0100...	4-17
2114 2000...	4-17
2114 2100...	4-18
2114 3000...	4-18
2114 3300...	4-19
2114 4100...	4-19
2115 2100...	11-5
2120 5000...	4-13
2120 5100...	4-15
2125 2000...	4-29
2125 2100 …	4-29
2171 0100...	4-26
2171 0200...	4-26
2171 2100...	4-26
2171 2400...	4-27
2176 2100...	4-26
2176 3200...	4-27
2176 3300...	4-27
2176 3400...	4-28
2101 8100...	5-6
2195...	4-4
2201 2...	3-4
2201 50...	3-2
2201 51...	3-2
2202 25...	3-4
2202 26...	3-4
2202 27...	3-4
2202 50...	3-2
2202 51...	3-2
2202 8...	3-7
2210 9...	3-6
2290 201...	3-5
2290 2011...	3-3, 3-5
2290 5...	3-3
2290 8...	3-7
2291 000...	3-3, 3-5
2291 001...	3-3, 3-5
2291 002...	3-6
2500 8181 00...	5-4, 5-17
2500 8181 06...	5-5, 6-19
2500 8181 08...	5-5, 6-19
2532 0...	6-7, 6-8
2532 20...	6-15
2532 21...	6-16
2532 3...	6-13
2532 5...	6-10
2532 7...	7-10
2532 8...	5-17
2552 0...	6-7, 6-8
2552 20...	6-15
2552 21...	6-16
2552 3...	6-13
2552 4...	6-12
2552 5...	6-10
2552 7...	6-18, 6-22, 6-24
2552 8...	5-3, 5-6, 5-16, 5-24
2553 7...	6-18
2553 8...	5-3, 5-6, 5-16
2573 8...	5-3, 5-6
2740...	7-7
2750...	7-5
2760....	7-7
2770...	10-14

Order code	Page
2899 002...	6-9, 7-9
2899 009...	i-6
2980...	8-26
2995...	8-32
3010 00...	10-12
3010 10...	10-13
3020...	10-12
3030...	10-13
3070...	10-13
3080...	10-14
3090...	10-13
3095...	10-11
3910 10...	10-11
3910 20...	10-8
3910 22...	10-8
3910 30...	10-10
3920..	10-10
3921...	10-10
3930 021...	10-15
3930 026...	10-15, 10-16
3930 027...	10-16
4500 2608...	2-10
9700...	2-12, 2-13
N0F...	7-3
N100...	10-3
N100S...	10-6
N101...	10-2
N101S...	10-6
N102...	10-2
N102S...	10-6
N103...	5-35
N104...	10-2
N105...	10-2
N106...	10-3
N106S...	10-6
N108...	10-2
N108S...	10-6
N110...	10-3
N110S...	10-6
N113...	10-3
N113S...	10-6
N115...	10-3
N117...	10-3
N118...	10-3
N119...	10-3
N120...	10-2
N121...	10-3
N121S...	10-6
N122...	7-4, 10-2
N123...	10-2
N124...	10-2
N125-0...	10-2
N125-468...	10-11
N131...	10-3
N132...	10-3
N135C...	7-2
N136C...	7-2
N180...	10-7
N1F...	7-3
N230...	5-17, 5-34
N239...	5-35
N27...	8-31
N2F...	7-3
N324...	10-7
N325...	10-7
N341...	10-7
N343...	10-8

R

Order code	Page
N344...	10-8
N345...	10-7
N347...	10-7
N348...	10-7
N349...	10-7
N353-...	10-7
N354-...	10-7
N355...	10-7
N356...	10-7
N368...	10-7
N3F...	7-3
N411...	10-9
N412...	10-9
N442...	10-10
N443...	10-10
N445...	10-9
N446...	10-10
N447...	10-9
N449...	10-9
N450...	10-10
N451...	10-10
N453...	10-9
N455...	10-8
N456...	10-9
N457...	10-10
N458...	10-9
N459...	10-9
N460...	10-8
N461...	10-9
N462...	10-9
N463...	10-10
N464...	10-10
N465...	10-10
N466...	10-10
N485...	10-10
N489...	10-9
N491...	10-8
N498...	10-10
N4F...	7-3
N530...	7-7
NAF...	5-28
NC-E0...	9-2, 9-3
NC-E1...	9-3, 9-4
NC-E2...	9-5
NC-P0...	9-2, 9-3
NC-P1...	9-3, 9-4
NC-P2...	9-5
NC-S0...	9-2, 9-3
NC-S1...	9-3, 9-4
NC-S2...	9-5
NCM...	7-4
NCP...	7-5
NCV...	7-4
NDA...	5-29
NDB...	5-29
NDR...	7-3
NDV...	7-3
NIN...	10-9
NKH...	7-8
NKM...	7-8
NPC...	8-31
NPR...	7-6
NPS...	8-31
NRV...	7-5
NSE...	10-11
NSEV...	7-6
NSF...	10-11

Order code	Page
NTC...	10-11
NU-1...	9-6
NU-2...	9-6
NU-8...	9-7
NU-S...	9-6
NU-V...	9-7
NU...	10-11
NZ22...	6-5
NZF...	6-12
P100...	10-6
P101...	10-4
P102...	10-4
P105...	10-4
P106...	10-6
P108...	10-4
P109...	10-4
P110...	10-5
P113...	10-5
P115...	10-5
P117...	10-5
P118...	10-6
P121...	10-5
P127...	10-4
P131...	10-6
P132...	10-5
P136C...	7-3
P137...	10-5
P139C...	7-3
P193...	10-5
P194...	10-5
PA-N...	8-17
PA-MAR...	8-26
PBS...	2-24
PC-N...	8-17
PFA-...	4-23
PH-N...	8-17
PHS-...	4-23
PLB-...	4-24
PM124...	5-34
PM125...	5-34
PM83...	5-34
PMACP302...	8-2, 8-25
PMACP401...	8-3, 8-25
PMACP501...	8-4, 8-25
PMAER200...	8-20, 8-22
PMAER300...	8-22
PMAF302-...	8-6
PMAF302D...	8-14
PMAF302M...	8-14
PMAF401-...	8-6
PMAF401D...	8-14
PMAF401M...	8-14
PMAF501...	8-6
PMAF501D...	8-14
PMAF501M...	8-14
PMAFR...	8-10
PMAIR...	8-5
PMAL...	8-12
PMAR...	8-8
PMAVS...	8-19
PMBS...	5-32, 8-25
PMCDA...	1-62
PMCGD...	1-60
PMCGS...	1-56
PMCHA...	2-19
PMCHB...	2-19
PMCHG2...	2-20

Order code	Page
PMCKC...	2-16
PMCKJQ3...	1-48
PMCKMB...	1-52
PMCKMI...	1-50
PMCKQI3...	1-46
PMCMIS...	1-24
PMCMJP...	1-74
PMCRP...	1-40
PMCS...	5-33
PMCSS...	1-64
PMEQI...	11-6
PMETB...	11-7
PMHB...	2-22
PMHPD...	2-21
PMJF	8-17
PMP-...	8-27, 8-28
PMP10...	8-28
PMP2...	8-27
PMP45...	8-28
PMPG...	8-27
PMSB...	1-65
PMSC...	7-3
PMVAA...	6-20
PMVBA...	2-23
PMVDC...	5-30
PMVE...	5-22
PMVFA...	6-11
PMVHB...	6-4
PMVHC...	6-6
PMVHR...	8-24
PMVMB...	6-2
PMVMC...	6-2
PMVSC220...	5-4, 5-8, 5-9, 5-17, 5-26, 5-27
PMVSC260...	5-10
PMVSC300...	5-8, 5-26
PMVSC460...	5-8, 5-10, 5-26
PMVSE260...	5-10, 5-11, 5-14
PMVSE300...	5-10
PMVSE500...	5-10
PMVSE510...	5-12, 5-13
PMVSE600...	5-12
PMVSN...	5-6, 5-14
PMVSY...	5-18, 5-19, 5-34
PNUT-...	4-24
POSP...	1-38
PPG...	8-26
PR...	3-8
PSDB-...	4-24
PT-N...	8-17
PUML...	10-12
PUN...	10-14
PYP-...	4-23
RAP...	10-18
RQL...	10-17, 10-18
RDIR...	10-18
ZG-ATM...	1-36, 1-76
ZG-ZLS...	3-10

R

Representation in Europe

Slovakia

STRÁNSKÝ A PETRŽÍK

ing. Ján Keresztény
Slavkovská 205
059 86 Nová Lesná

phone: +421 903 643 085
e-mail: info@sappv.sk
www: www.sappv.sk

STRÁNSKÝ A PETRŽÍK SK

Stránský a Petržík SK, s r.o
Areál ZTS, Lieskovec 842/119
018 41 Dubnica nad Váhom

phone: +421 905 659 027
e-mail: info@sappv.sk
www: www.sappv.sk

France

CTA SOLUTIONS INDUSTRIELLES TECHNOLOGIES

CTA TECHNOLOGIES
1 rue du Moulin
59496 Salome

phone: +33 320 746 464
e-mail: commerce@cta-automation.com
www: www.cta-automation.com

FAURE TECHNOLOGIES

FAURE TECHNOLOGIES
ZI des auréats, 47 allée Marconi
26000 Valence

phone: +33 475 759 900
e-mail: info@faure-technologies.com
www: www.faure-technologies.com

Germany

PS Pneumatik Service GmbH

PS-Pneumatik Service GmbH
Zum Gärtnerberg 3
D-09481 Elterlein

phone: +49 373 49 979 040
e-mail: info@pneumatik-service.de
www: www.pneumatik-service.de

STRÁNSKÝ A PETRŽÍK

Stránský a Petržík,
Pneumatické válce spol. s r.o.
544 72 Bílá Třemešná 388
Czech Republic

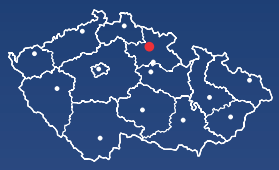

phone: (+420) 499 628 600

www.sappv.cz
info@sappv.cz
stranskyapetrzikcz
stranskyapetrzikcz
company/stranskyapetrzikcz

©Stránský a Petržík, Pneumatické válce spol. s r.o. 2025. Subject to change. This catalog is valid from June 4, 2025, until the release of the next catalogue.